GPRS PHONE
SERVICE
MANUAL

Table Of Contents

1. Introduction 1-1

2. Specification 2-1

2.1 H/W Features 2-1

2.2 S/W Features 2-2

3. Disassembly Instruction 3-1

3.1 Before Disassembly 3-1

3.2 Main Frame 3-2

3.3 Folder 3-3

3.4 Exploded View and Parts List 3-6

3.4.1 Exploded View-Main 3-6

3.4.2 Exploded View-Folder 3-7

3.4.3 Mechanical Parts List 3-8

4. Data Kit & Download Procedure 4-1

4.1 Data Kit 4-1

4.1.1 Download Equipment 4-1

4.1.2 Download Procedure 4-1

5. Troubleshooting 5-1

5.1 Power-on Trouble 5-1

5.2 MIC Trouble 5-2

5.3 Receiver Trouble 5-3

5.4 Melody & MP3 Trouble(Handset speaker) 5-4

5.5 LCD Trouble 5-5

5.6 Charge Trouble 5-6

5.7 Vibrator Trouble 5-7

5.8 Key Backlight & Indicator Trouble 5-8

5.9 SIM Detection Trouble 5-9

5.10 Ear Phone Receiver Trouble 5-10

5.11 Camera Trouble 5-11

5.12 Ear Phone MP3 Trouble 5-12

5.13 USB Mass Storage Trouble 5-13

5.14 Bluetooth Trouble 5-14

5.15 TX Power Trouble(E-GSM) 5-15

5.15 TX Power Trouble(DCS) 5-17
5.16 RX Sensitivity Trouble(E-GSM) 5-19
5.17 RX Sensitivity Trouble(DCS) 5-21

6. Block Diagram 6-1

6.1 BB Block Diagram 6-1
6.2 RF Block Diagram 6-2

7. Schematic Diagram 7-1

7.1 Key Pad 7-1
7.2 Main Board 7-2
7.2.1 Chipset (Calypso & IOTA) 7-2
7.2.2 Memory 7-3
7.2.3 Audio & MP3 7-4
7.2.4 Camera 7-5
7.2.5 I/O & B'd to LCD Connector & SIM Interface 7-6
7.2.6 Multimedia Chipset 7-7
7.2.7 Power Management & Charger 7-8
7.3 RF Schematic 7-9
7.3.1 RF Pam 7-9
7.3.2 RF Main IC 7-10

8. PCB Diagram 8-1

8.1 Main PCB 8-1
8.2 Key FPCB 8-3

9. Parts List 9-1

9.1 Electrical Part List(Circuit) - Main 9-1
9.2 Electrical Part List(Circuit) - Key 9-11
9.3 Mechanical Part List 9-12

1. Introduction

This model is a Folder type mobile phone operated in the GPRS Digital Cellular Mobile Radio System, which is the Pan-European mobile cellular standard. This model has the operation band of GSM 900 and DCS 1800. GPRS Class 10 II features are fully supported and parts of the GSM Phase II+ features are also supported. About the SIM Toolkit, This model supports up to Class 3 including Class 1, 2. For speech communication, This model supports Full Rate(FR), Enhanced Full Rate(EFR) and Half Rate(HR). For easy text, eZi Text is implemented and WAP protocol is adopted for internet connection. Bluetooth module is built in, it's able to use Bluetooth headset.

Memo

2. Specification

2.1 HW Features

Item	Description	Remark
Supporting standard	GSM 900 / DCS 1800 Dual Band E-GSM Phase 2 and Phase 2+ SIM Toolkit : Class 1,2,3 GPRS Class 10	
Frequency range	E-GSM TX : 880 - 915 MHz E-GSM RX : 925 - 960 MHz DCS 1800 TX : 1710 - 1785 MHz DCS 1800 RX : 1805 - 1880 MHz	
Battery	Capacity Standard : Li-ion, 1000 mAh	
Display	Full graphic type Dual LCD Main 260k TFT Color LCD Pixels : 176 x 220 Ext. 65k Color-STN LCD Pixels : 96 x 96	
Camera	CMOS type 3M Pixels, QXGA(2048*1536)	
3 Color LED		Indicator
Antenna	Fixed type	
PC synchronization	Applied	
Speech coding	FR, EFR, HR	
Data & Fax	Built-in	
Vibrator	Built-in	
Dual Stereo Speaker	Applied (64 poly Stereo Sound)	
Portable Handsfree (Ear-Phone)	Built-in	
Travel charger	Built-in	
Bluetooth	Built-in	

2.2 SW Features

Main menu	Sub menu	Detail item
Message	Write Message	SMS/MMS
	Inbox	SMS/MMS
	Outbox	SMS/MMS
	Draft	SMS/MMS
	Templates	
	Voice Mail	Call Voice Mail
		Voice Center
	Info Message	Read
		Receive
		Topics
		Languages
		Alert
	Settings	SMS/EMS/MMS/Memory Status
Call Register	Call History	Missed No.
		Received No.
		Dialed No.
	Call Duration	Last Incoming
		Last Outgoing
		Total Incoming
		Total Outgoing
		Reset
	Call Costs	Last Call's Cost
		All Call's Cost
		Cost Reset
		View Max Cost
		Set Max Unit
		Price/Unit

Main menu	Sub menu	Detail item
Call Register	Date Counters	Last Sent
		Last Received
		Total Sent
		Total Received
		Reset
Profile	General	Activate
		Personalise
		Rename
	Silent	Activate
		Personalise
		Rename
	Vibration Only	Activate
		Personalise
		Rename
	Outdoor	Activate
		Personalise
		Rename
	Other 1	Activate
		Personalise
		Rename
	Other 2	Activate
		Personalise
		Rename
	Other 3	Activate
		Personalise
		Rename
Setting	Time/Date Set	Time Set
		Date Set
	Alarm Set	Set Alarm
		Alarm Sound
		Power Off Alarm

Main menu	Sub menu	Detail item
Setting	Call Setting	Call Divert
		Call Waiting
		Send My Caller ID
		Answer Mode
		Min Minder
		Auto Redial
		Auto Answer
		Data Transfer Mode
	Phone Settings	Language
		Top Menu Type
		Display Settings
		Sub LCD Contrast
		User Text
		Backlight
		Screen Saver
		LED Select
	Security Settings	PIN Code
		Phone Lock
		Call Barring
		Fixed Dial Number
		Change Codes
	Network Settings	GPRS Session
		Network Select
		Preferred List
	Factory Set	
File Manager	Contents Box	Image Files
		Video Clips
		Sound Files
	Format Memory	Internal Memory
		External Memory

Main menu	Sub menu	Detail item
Camera	Camera	
	Camcoder	
	Photo Album	
	Video Album	
	Phonebook Album	
	Configuration	
Application	MP3 Player	MP3 File List
		Setting
	Game	Stunt Car
		Fire Hammer
	Scheduler	Daliy view
		Weekly view
		Monthly view
		Make
		Delete All
		Send All
		Setting
		To Do
	Bluetooth	Discover
		Paired Devices
		Settings
	Calculator	
	Unit Converter	Length
		Weight
		Volumes
		Surface
		User Define
	Stopwatch	
	World Time	
	Voice Recorder	Record
		Play

Main menu	Sub menu	Detail item
Java	Downloads	
	Memory status	
	Net work	
Internet	Home	
	Book marks	
	Push Message	
	Goto URL	
	Profiles	
	Cache Settings	Clear Cache
		Cache check
	Wap Version	
Phonebook	Name Search	
	Group Search	
	Add Entry	
	Speed Dials	
	Caller Groups	
	PB Manage	Own Number
		Own V-Card
		Scratch Pad
		Memory Status
		Copy All
		Move All
		Delete All
		Memory In Use
SIM AT		

3. Disassembly Instruction

3.1 Before Disassembly

1. Remove the battery. To do so:

   ① Pull down the back cover and open it.

   ② Lift up the back of battery and pull it out.

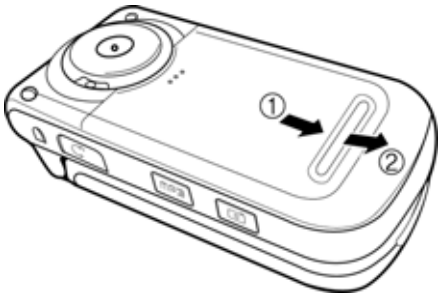

2. Remove the SIM card. To do so:

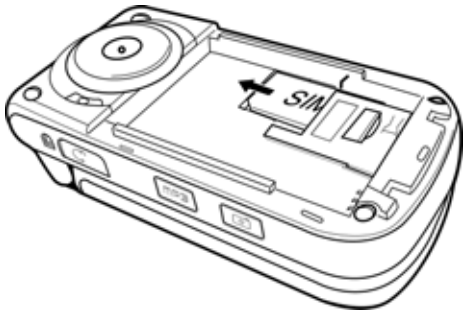

3.2 Main Frame

1. Remove screws. To do so:

   ① Remove the Deco rear as shown.

   ② Remove four screws from back of the phone.

2. Insert a small ' – ' type driver between the front case and the rear case, and lift up the rear case.

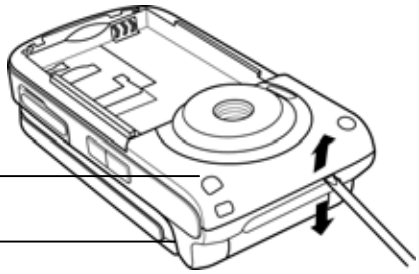

3. Now, you can replace the PCBs and the other components.

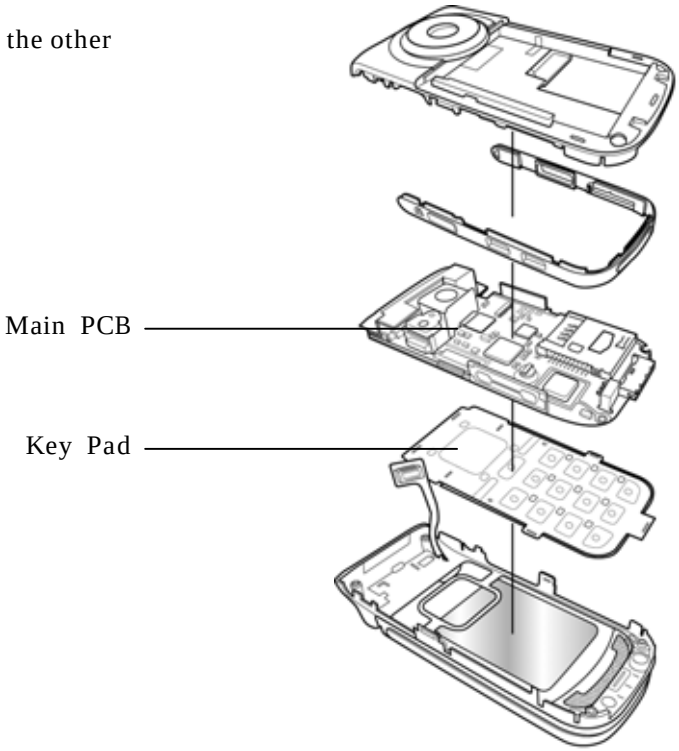

3.3 Folder

1. Remove the rear case as described at Steps 1 and 2 under Main Frame Disassembly on page 3-2.

2. Remove Conductive tape.

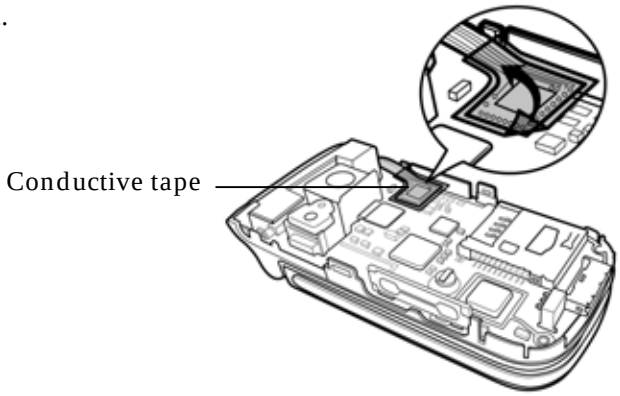

3. Lift LCD fpcb connector up and turn outward to separate.

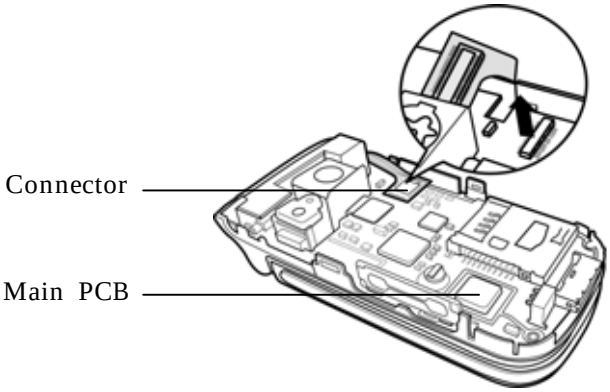

4. Unhook the folder from the main frame.

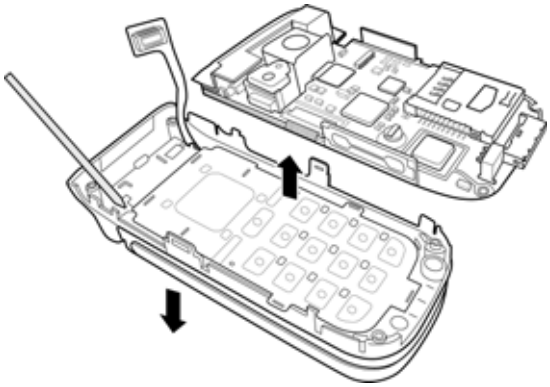

5. Remove two rubbers and two screws from the folder.

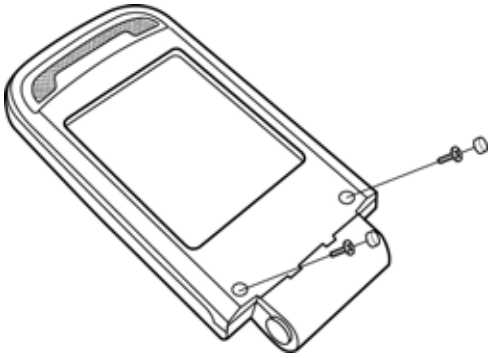

6. Insert a small ' - ' type driver between the upper folder and lower folder, and lift up the upper folder.

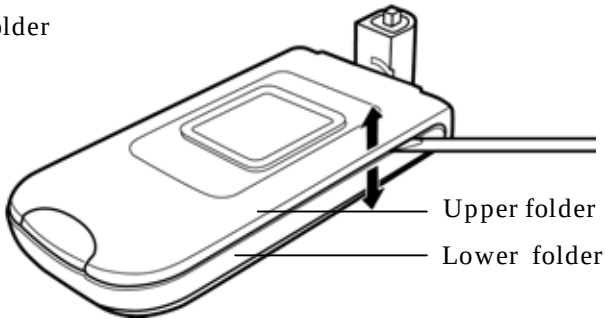

7. Remove Cover fpcb from the hinge, then two screws from the folder.

Note : Please be careful when remove Cover fpcb not to pop out.

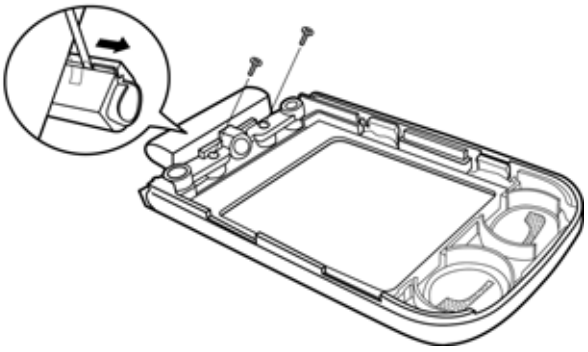

8. Now, you can remove the LCD ass'y and the other components.

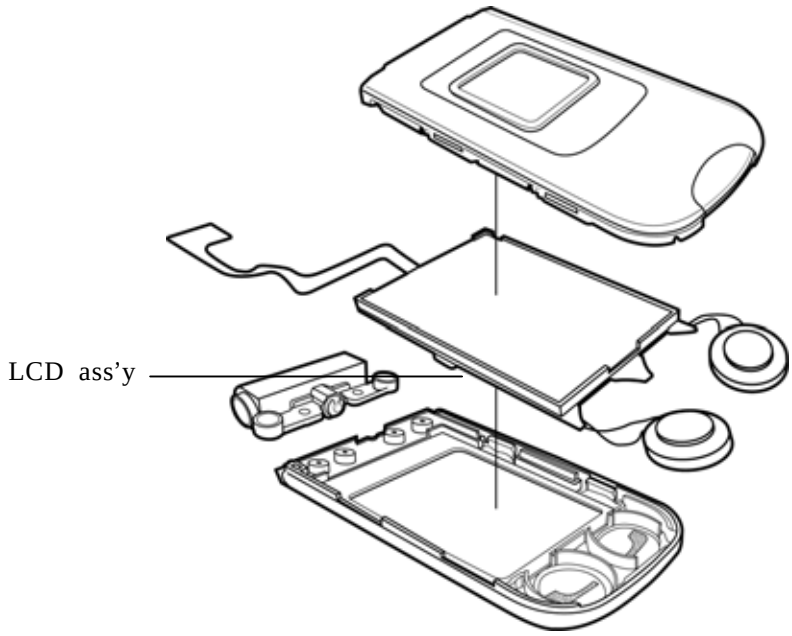

3.4 Exploded View and Parts List

3.4.1 Exploded View - Main

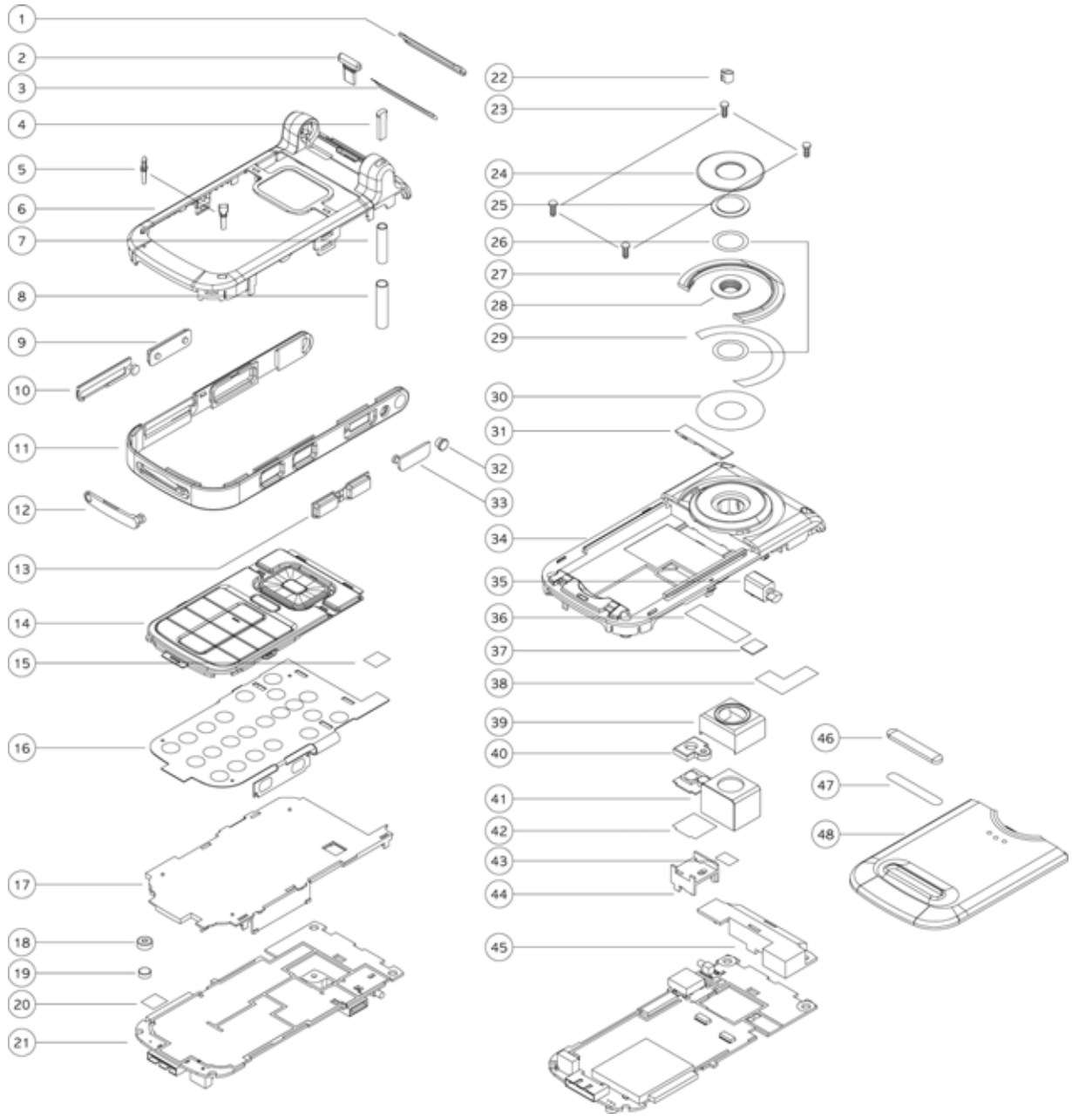

3.4.2 Exploded View – Folder

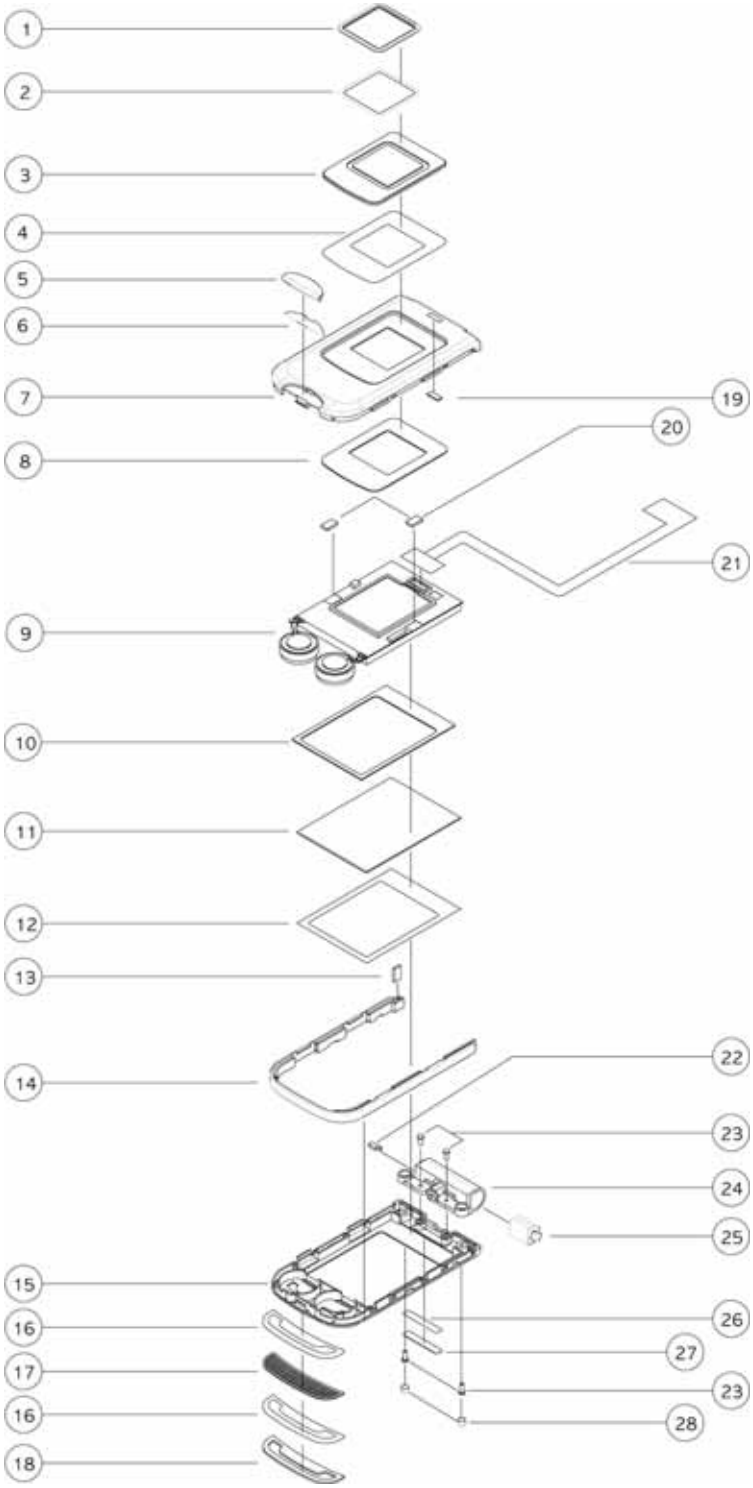

3.4.3 Mechanical Parts List

NO.	DESCRIPTION-Main	Q'TY	NO.	DESCRIPTION-Folder	Q'TY
1	DECO FRONT	1	1	DECO SUB	1
2	RUBBER STOPPER	1	2	TAPE SUB DECO	1
3	TAPE DECO FRONT	1	3	WINDOW SUB	1
4	INDICATOR	1	4	TAPE WINDOW SUB	1
5	RUBBER DAMPER	2	5	UPPER BADGE	1
6	CASE FRONT	1	6	TAPE UPPER BADGE	1
7	TUBE LIGHT PROTECT IN	1	7	FOLDER UPPER	1
8	TUBE LIGHT PROTECT OUT	1	8	CUSHION LCD SUB	1
9	SIDE KEY	1	9	LCD MODULE ASS'Y	1
10	COVER SDCARD	1	10	CUSHION LCD MAIN	1
11	SIDE DECO MAIN	1	11	WINDOW MAIN	1
12	COVER I/O	1	12	TAPE WINDOW MAIN	1
13	MP3-CAMERA KEY	1	13	MAGNET	1
14	KEY PAD	1	14	SIDE DECO FOLDER	1
15	TAPE HOLE SWITCH R	1	15	FOLDER LOWER	1
16	KEY FPCB ASS'Y	1	16	TAPE DECO SPEAKER	1
17	BRACKET	1	17	INNET	1
18	RUBBER MIC	1	18	SPEAKER DECO	1
19	MIC	1	19	CUSHION FPCB	1
20	TAPE MIC	1	20	SHIELD FOAM LCD	2
21	PCB	1	21	FOLDER FPCB	1
22	RUBBER SCREW MAIN	1	22	FPCB COVER	1
23	SCREW MAIN	4	23	FOLDER SCREW	4
24	DECO CAMERA	1	24	ROTATE HINGE	1
25	WINDOW CAMERA	1	25	HINGE	1
26	TAPE WINDOW CAMERA	1	26	TAPE BADGE	1
27	DECO REAR	1	27	BADGE	1
28	COVER LENS	1	28	RUBBER SCREW FOLDER	2
29	TAPE DECO REAR	1			
30	TAPE DECO CAMERA	1			
31	COVER REAR	1			
32	RUBBER RF	1			
33	COVER EARJACK	1			
34	CASE REAR	1			
35	VIBRATOR	1			
36	CONDUCTIVE TAPE REAR	1			
37	SHIELD FORM FPCB	1			
38	CONDUCTIVE TAPE FPCB	1			
39	RUBBER CAMERA	1			
40	RUBBER FLASH	1			
41	CAMERA MODULE	1			
42	TAPE FLASH	1			
43	TAPE CAMERA	1			
44	BRACKET FLASH	1			
45	INTENNA	1			
46	RUBBER HOLDER	1			
47	TAPE RUBBER HOLDER	1			
48	COVER BATTERY	1			

4. Data Kit & Download Procedure

4.1 Data Kit

4.1.1 Download Equipment

Data Kit & Download Procedure

1. Download Cable
2. Desktop or Notebook PC
3. Download Fluid Program
4. Mobile Phone

4.1.2 Download Procedure

DOWNLOAD ENVIRONMENT

To download software of this model, the following environments should be
Prepared:

- Download cable, Interface JIG, is connected to serial port of the desktop or notebook PC.
- Download fluid program is copied to the desktop or notebook PC.
- Target software is downloaded to this mobile phone.

Warning

You must use the download cable kit (Interface JIG) and UART download monitor program.
Otherwise, downloading process won't work properly.

DOWNLOAD PROCEDURE

1. Unzip the model download fluid program (fluid2.11.zip) in the PC.
2. Execute **fluid_gui.exe**. and select "Global settings" tab. Then choose a correct serial port in the RS232 serial port Box. <Figure 1>

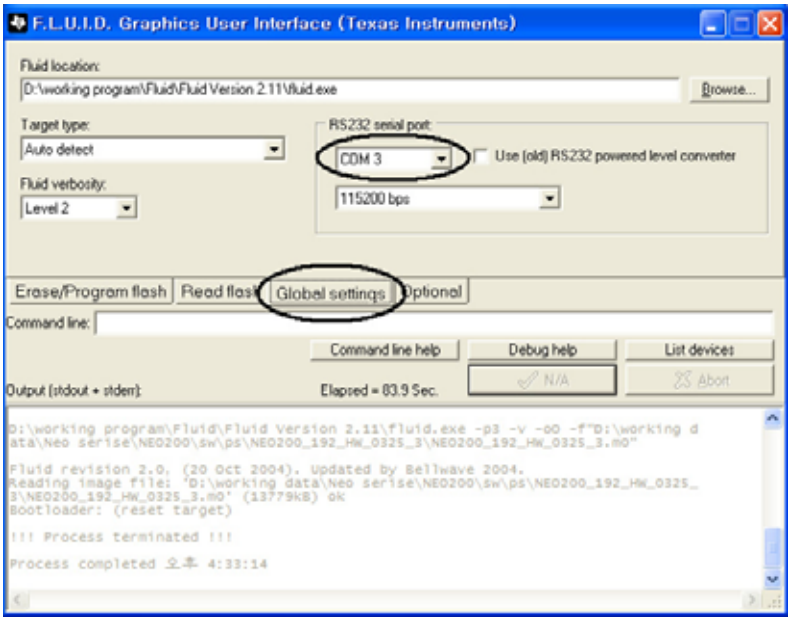

<Figure 1>

3. To download software, you must add the target software on the "Erase / Program flash" tab. Then press the "Add" button, and choose the target software that you want to download.

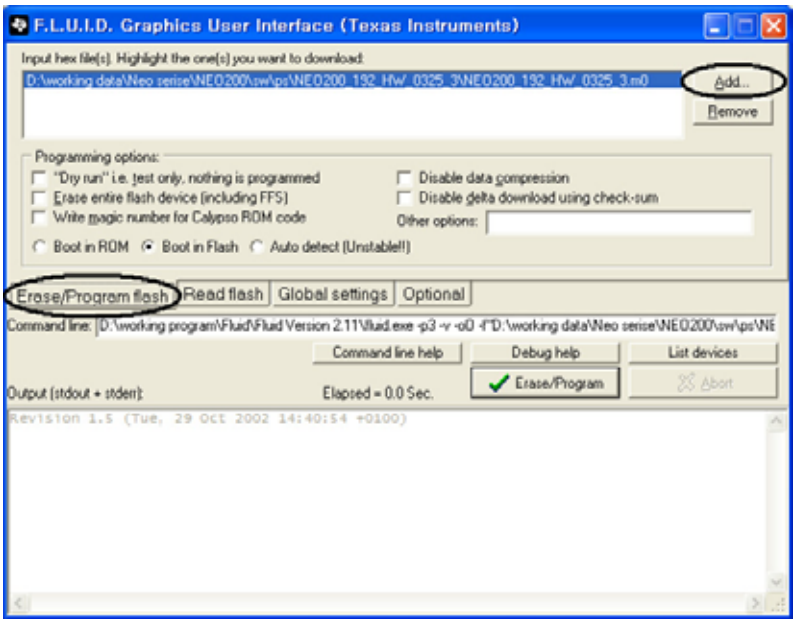

<Figure 2>

4. Select "Boot in flash" in the "Programming options" box.

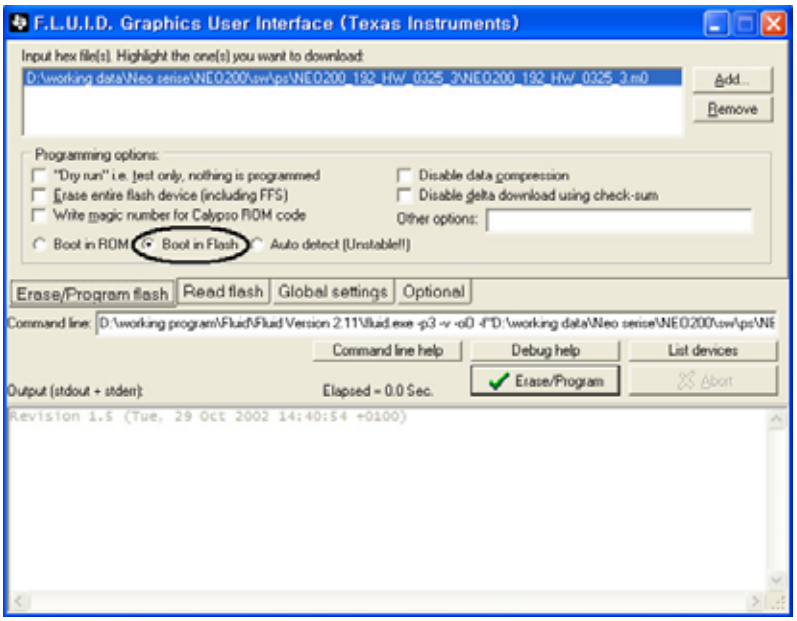

<Figure 3>

5. Press "Erase / Program" button to download.

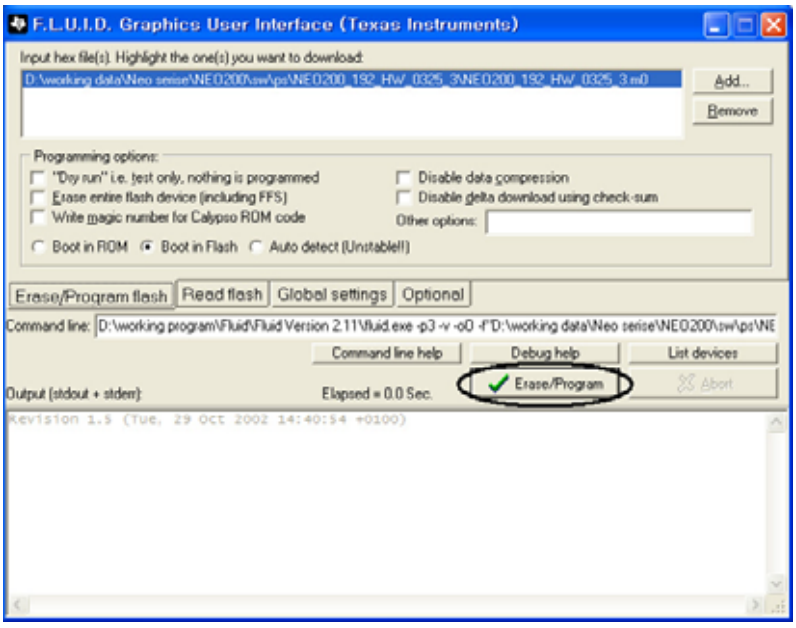

<Figure 4>

6. When the following window, <Figure 5> is displayed, connect this phone to the download cable, (Interface JIG) and press power on key of the phone. If the connection is successful, the following contents will be shown as <Figure 6>.

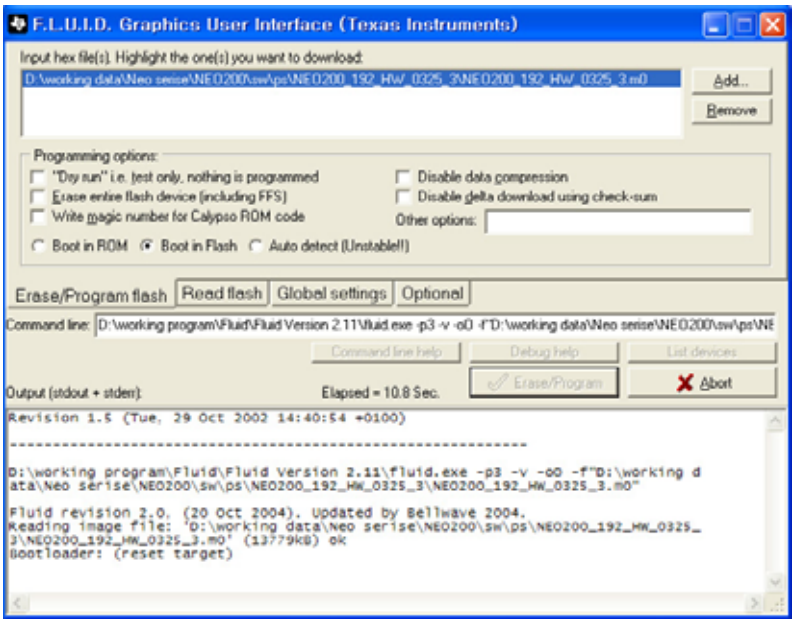

<Figure 5>

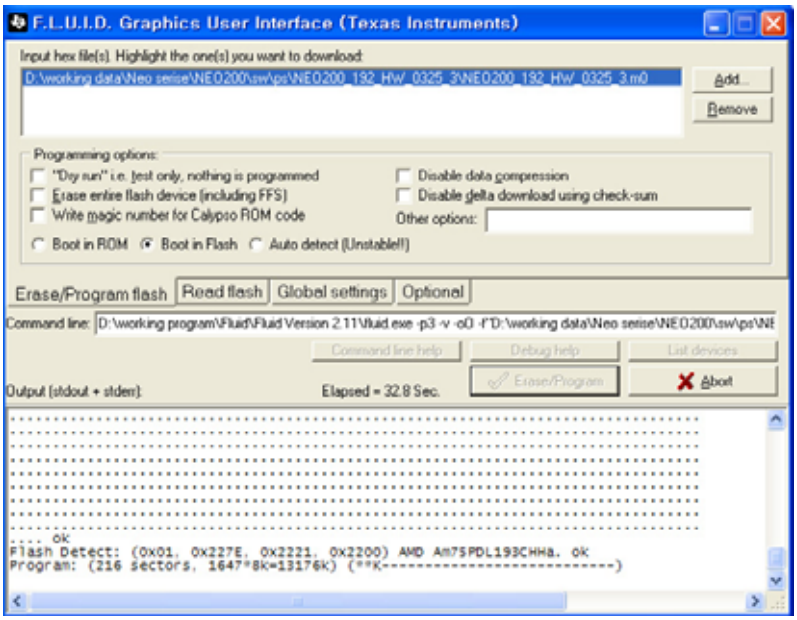

<Figure 6>

7. If the downloading procedure is successful, then the following window is shown.

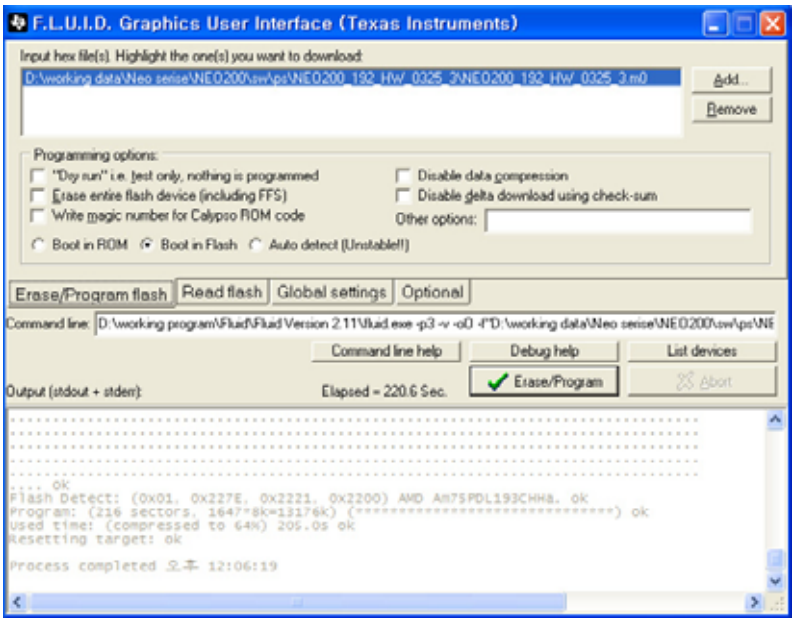

<Figure 7>

5. Troubleshooting

5.1 Power-on Trouble

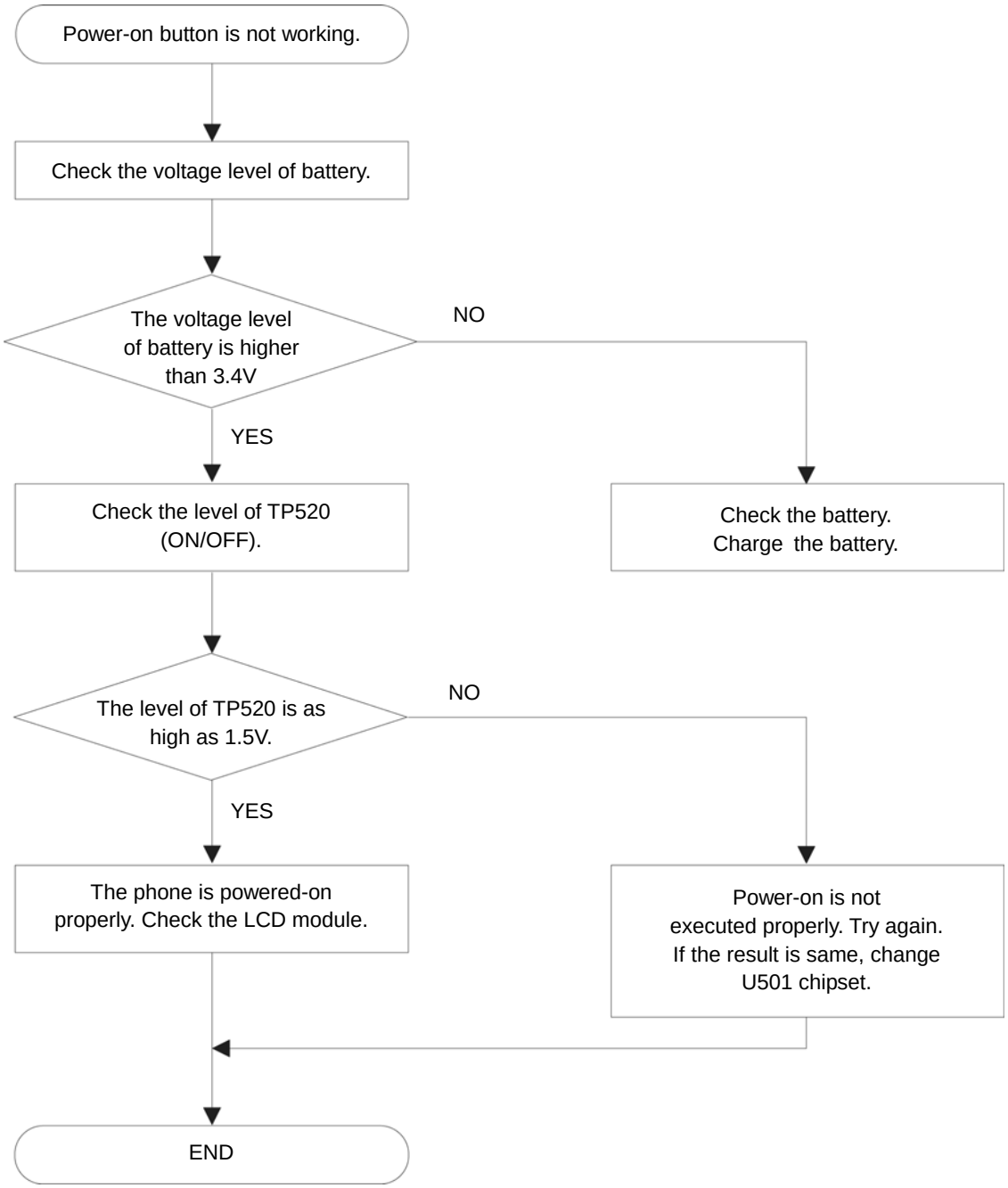

5.2 MIC Trouble

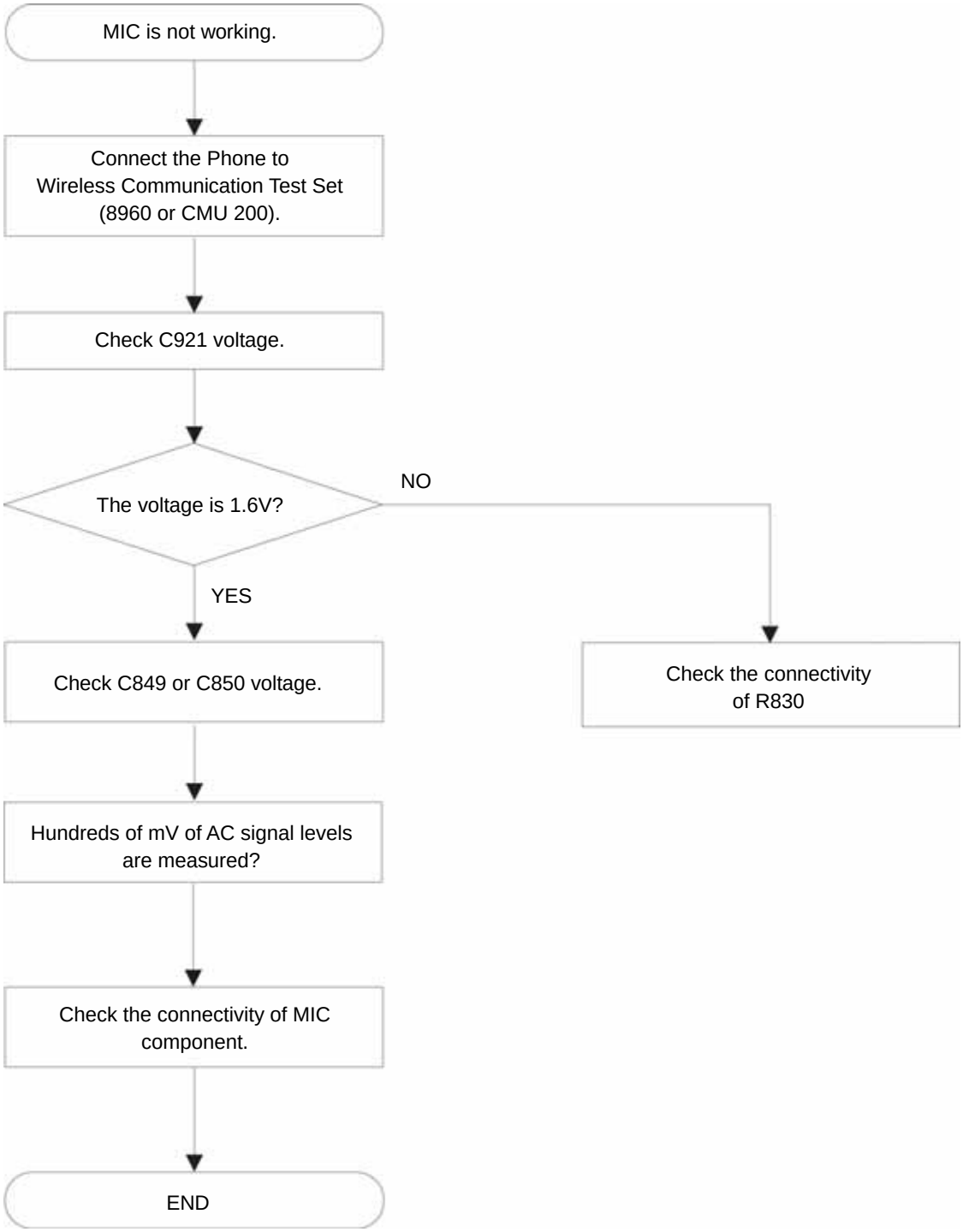

5.3 Receiver Trouble

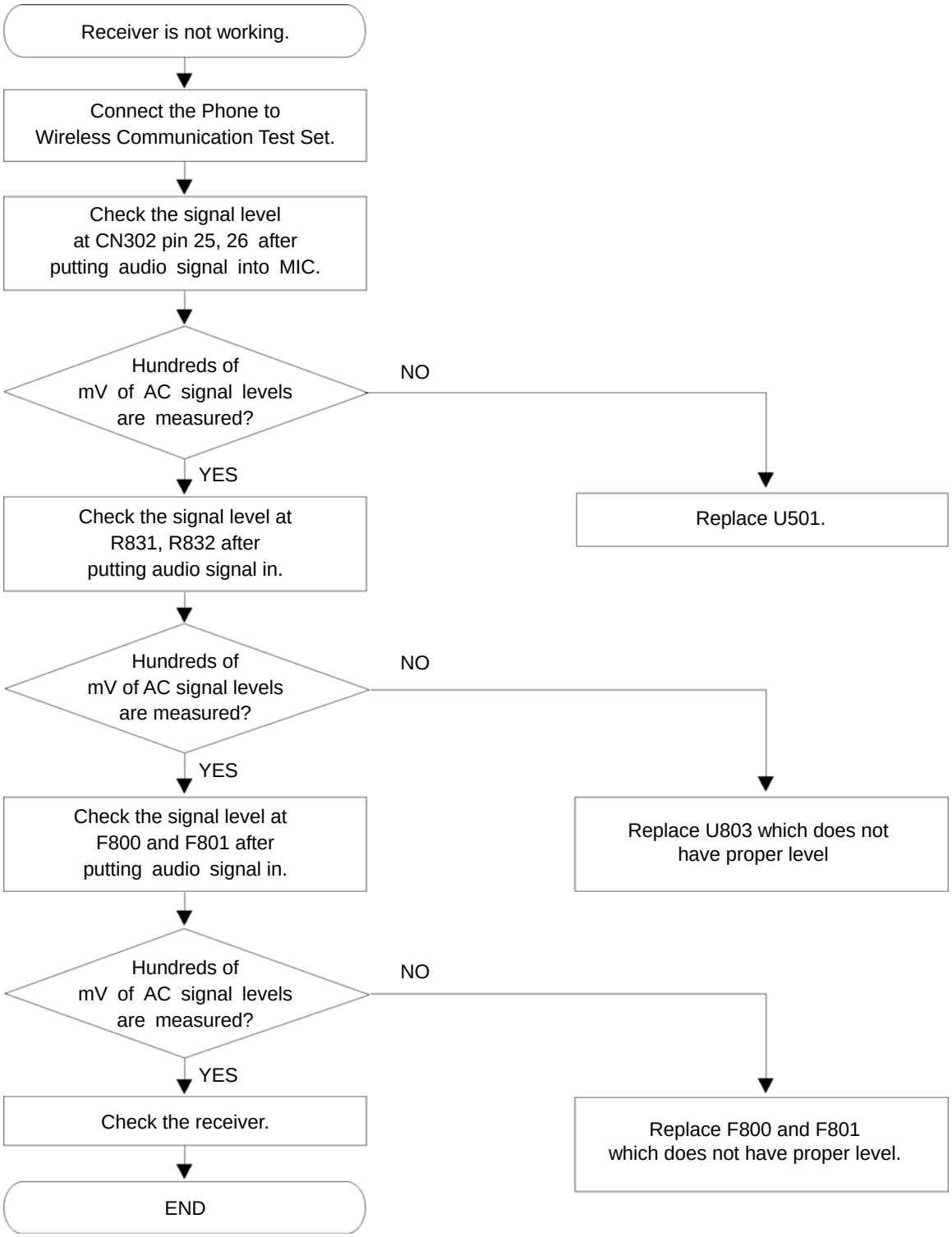

5.4 Melody & MP3 Trouble (Handset Speaker)

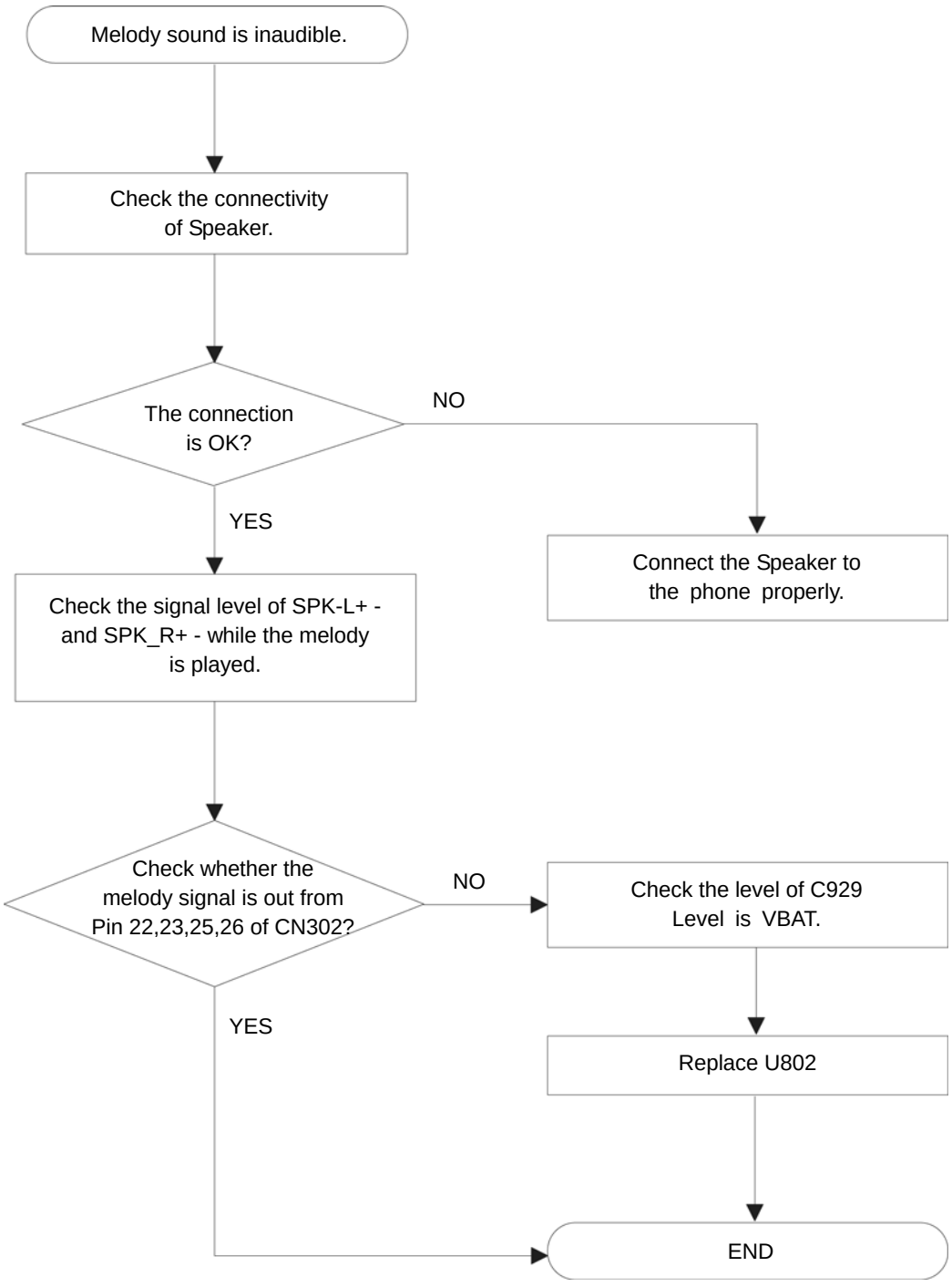

5.5 LCD Trouble

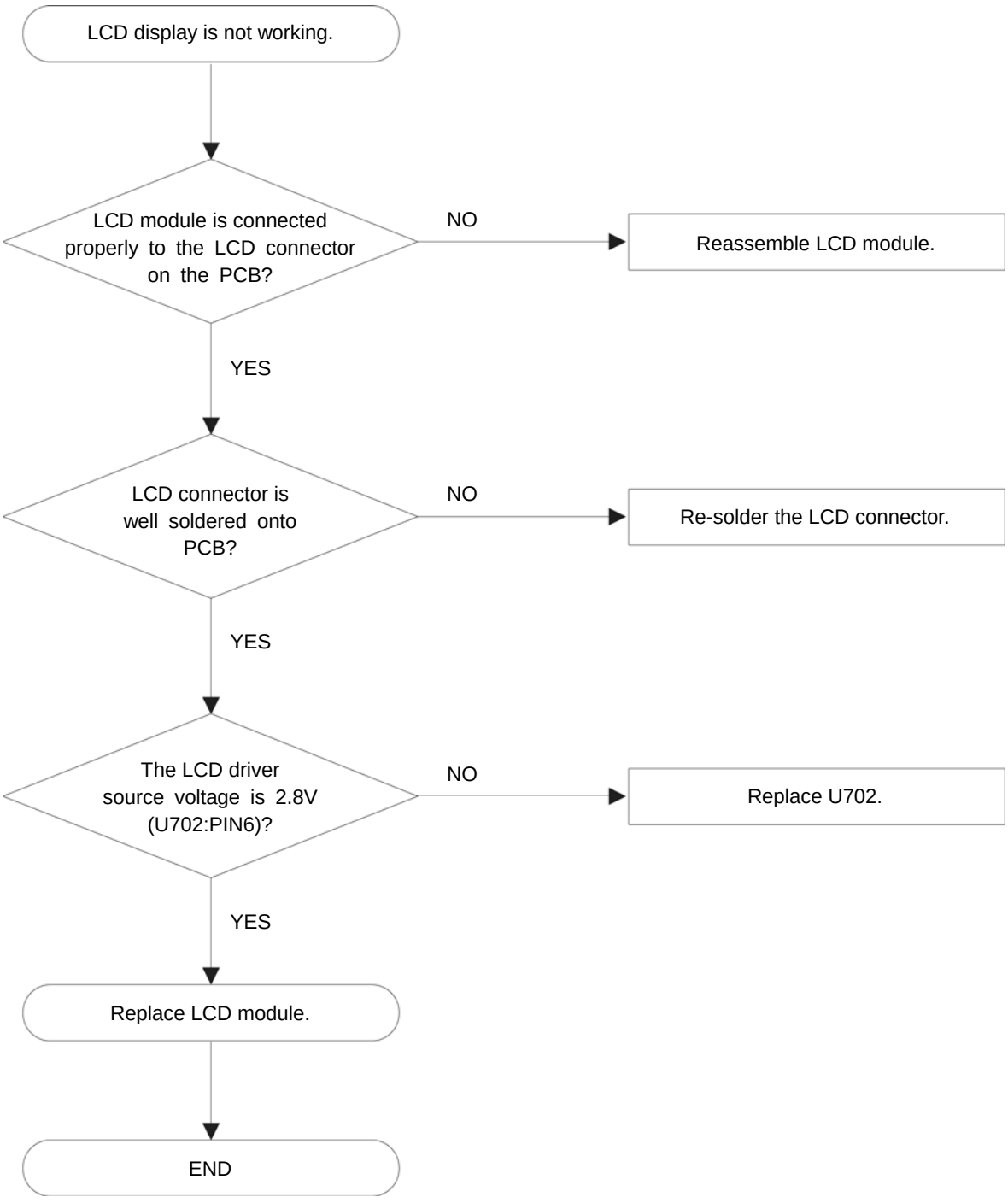

5.6 Charge Trouble

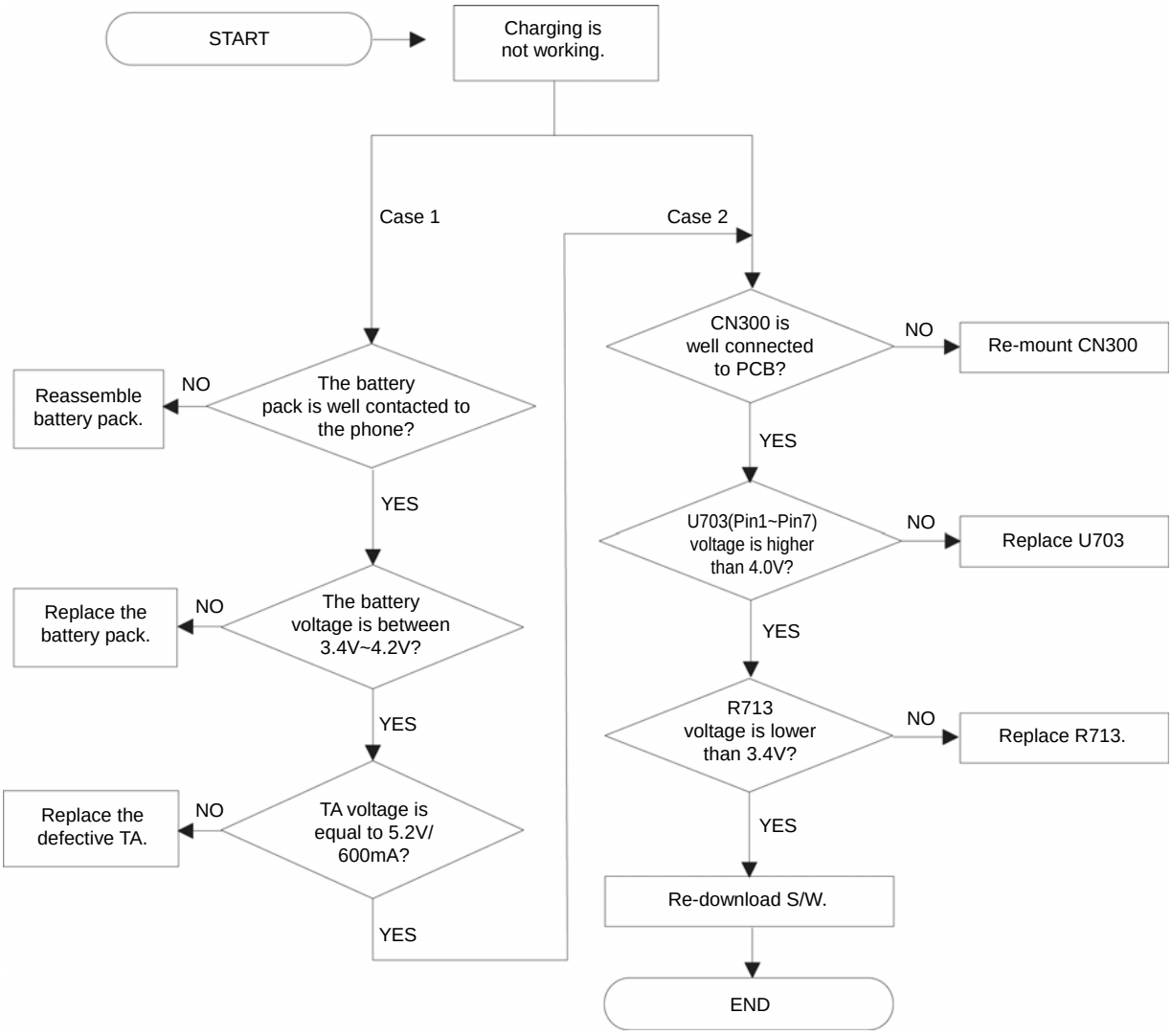

5.7 Vibrator Trouble

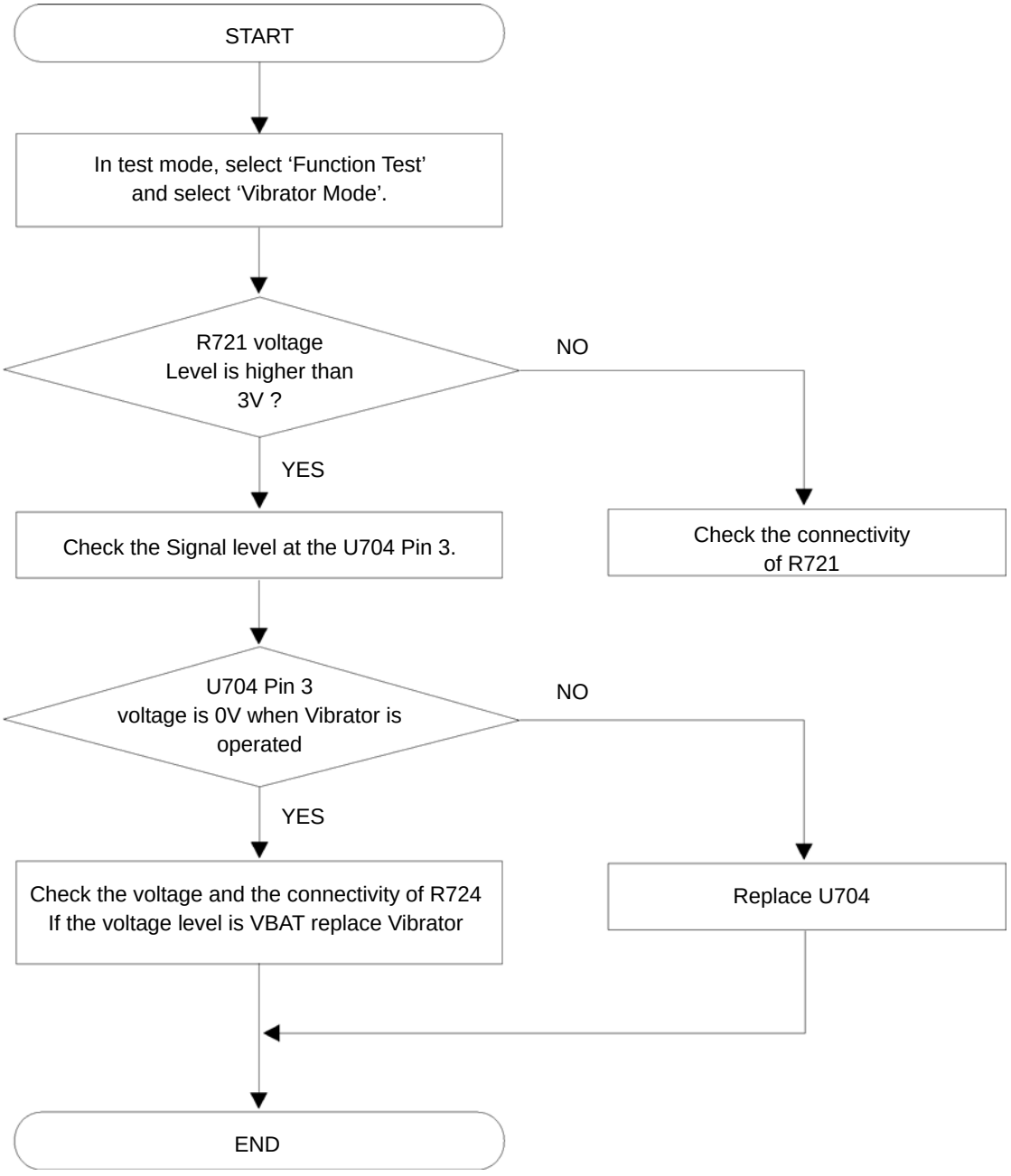

5.8 Key Backlight & Indicator Trouble

Note: To enter the Test mode, press *789 # on the phone, and hold down# key.

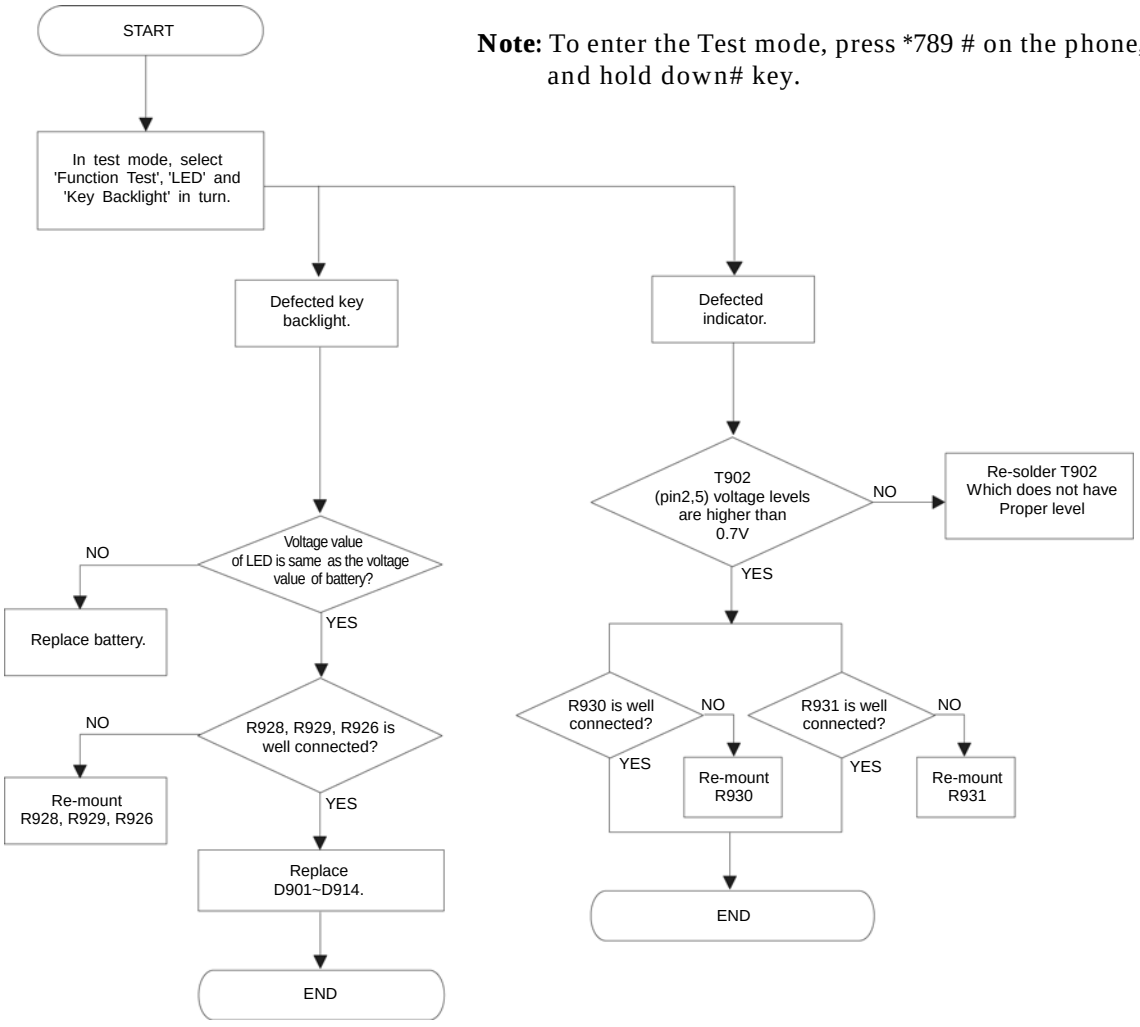

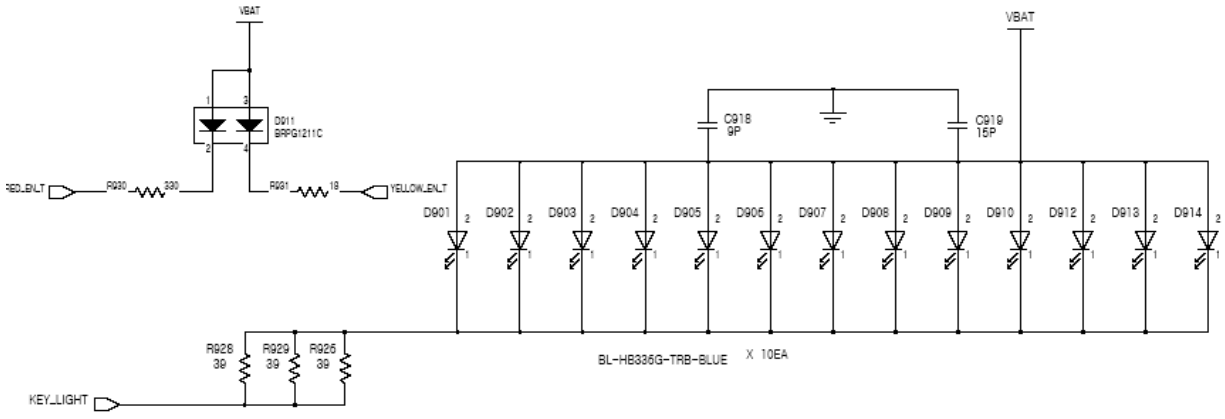

5.9 SIM Detection Trouble

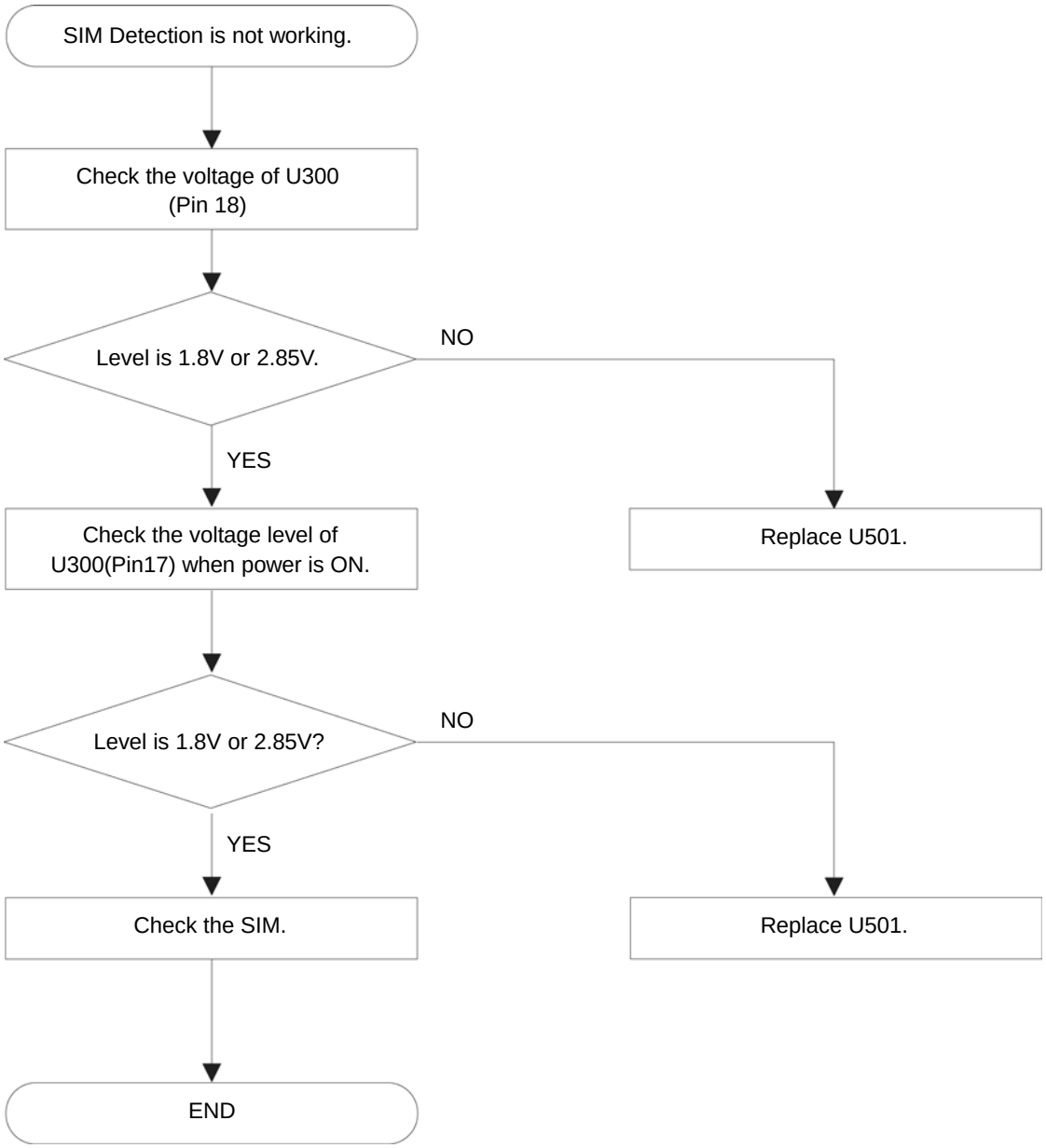

5.10 Ear Phone Receiver Trouble

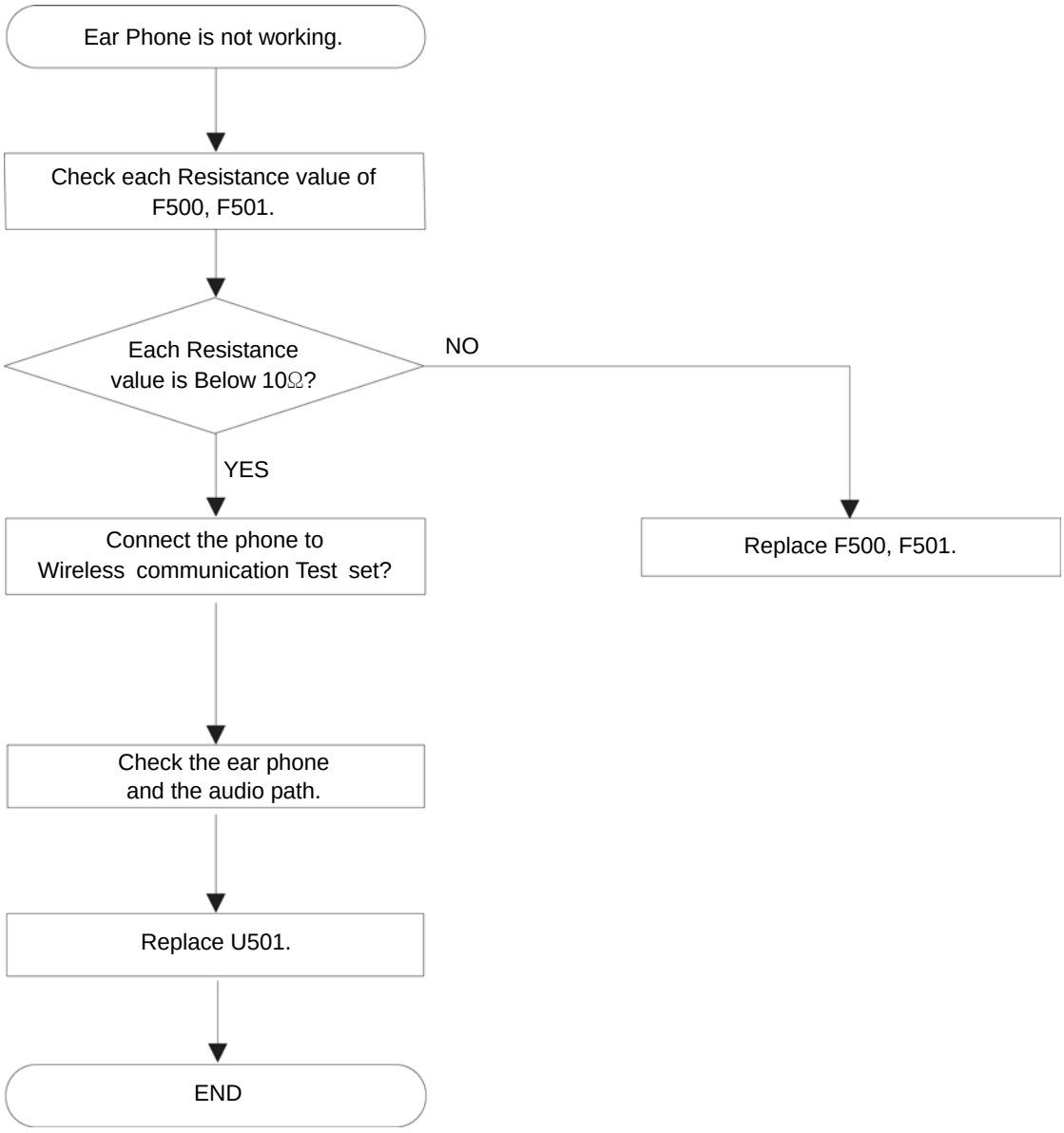

5.11 Camera Image Trouble

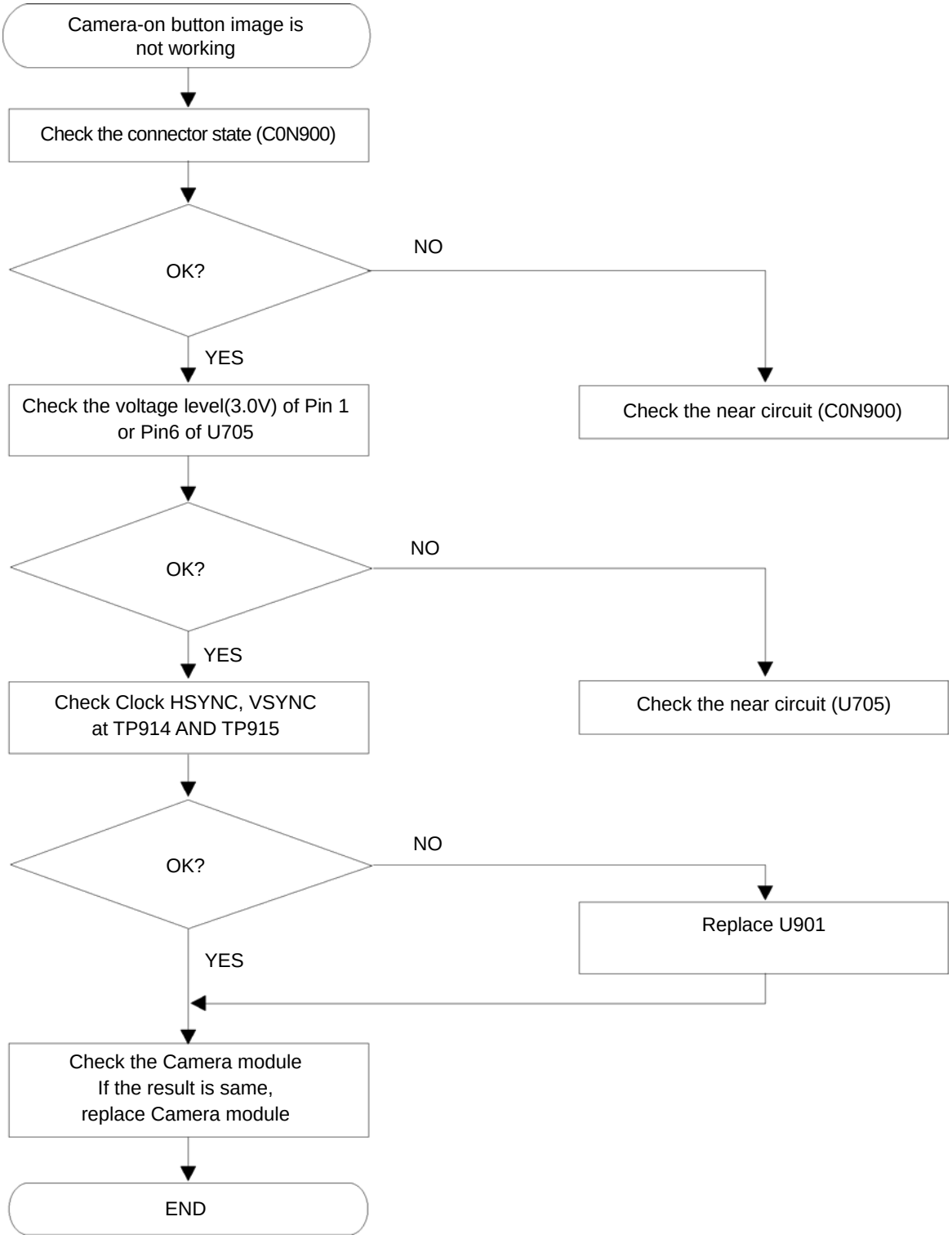

5.12 Ear Phone MP3 trouble

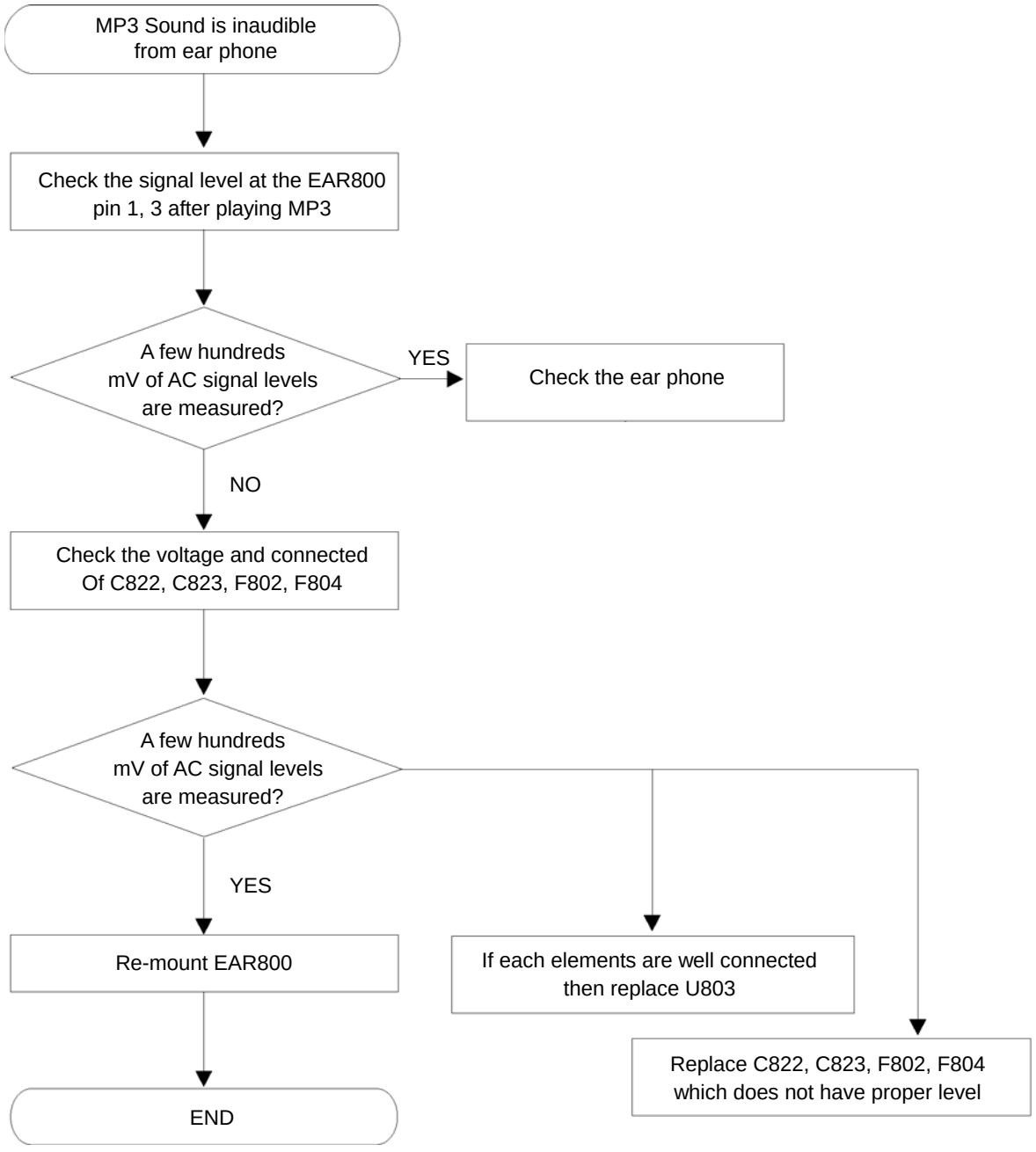

5.13 USB Mass Storage trouble

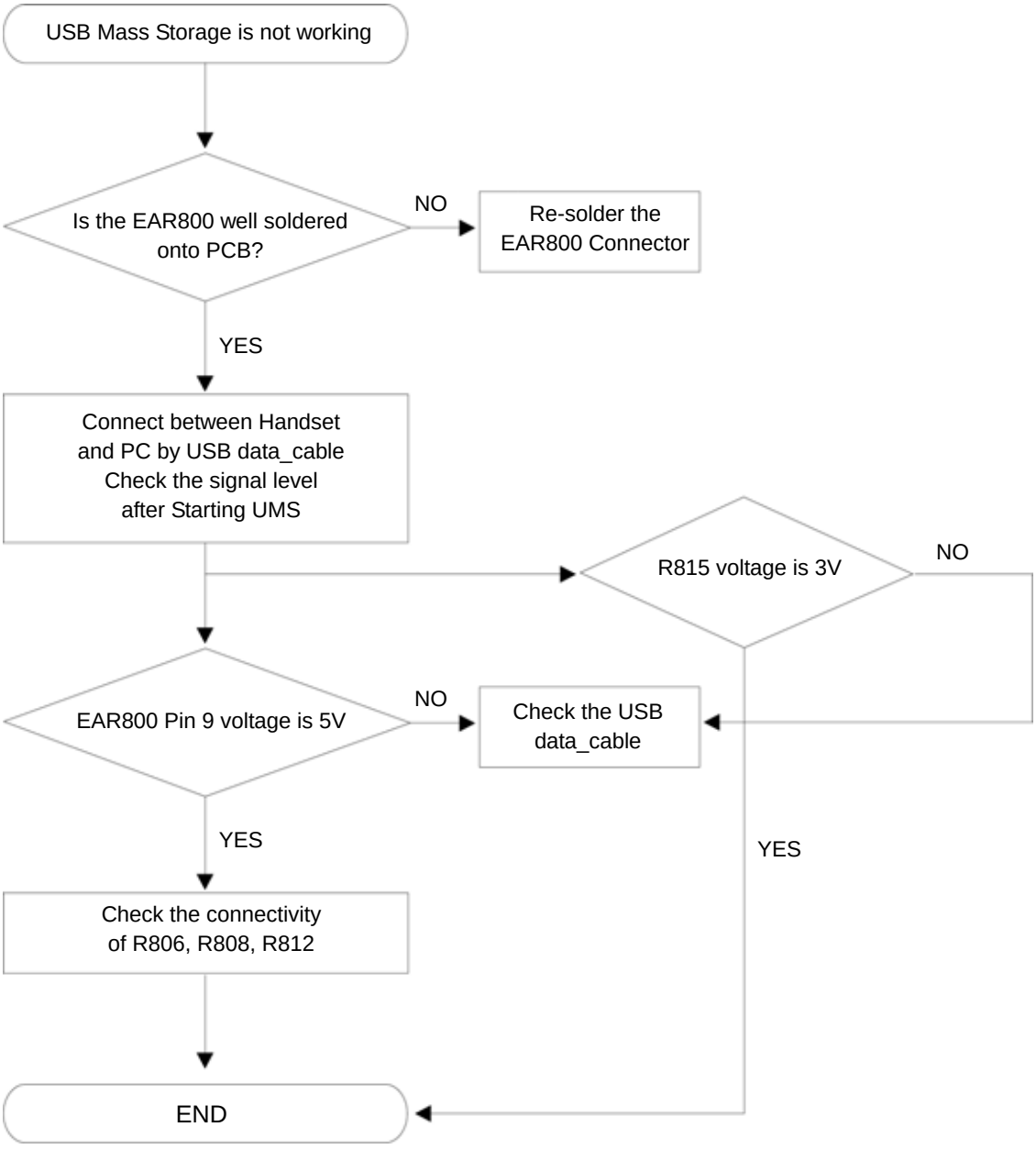

5.14 Bluetooth Trouble

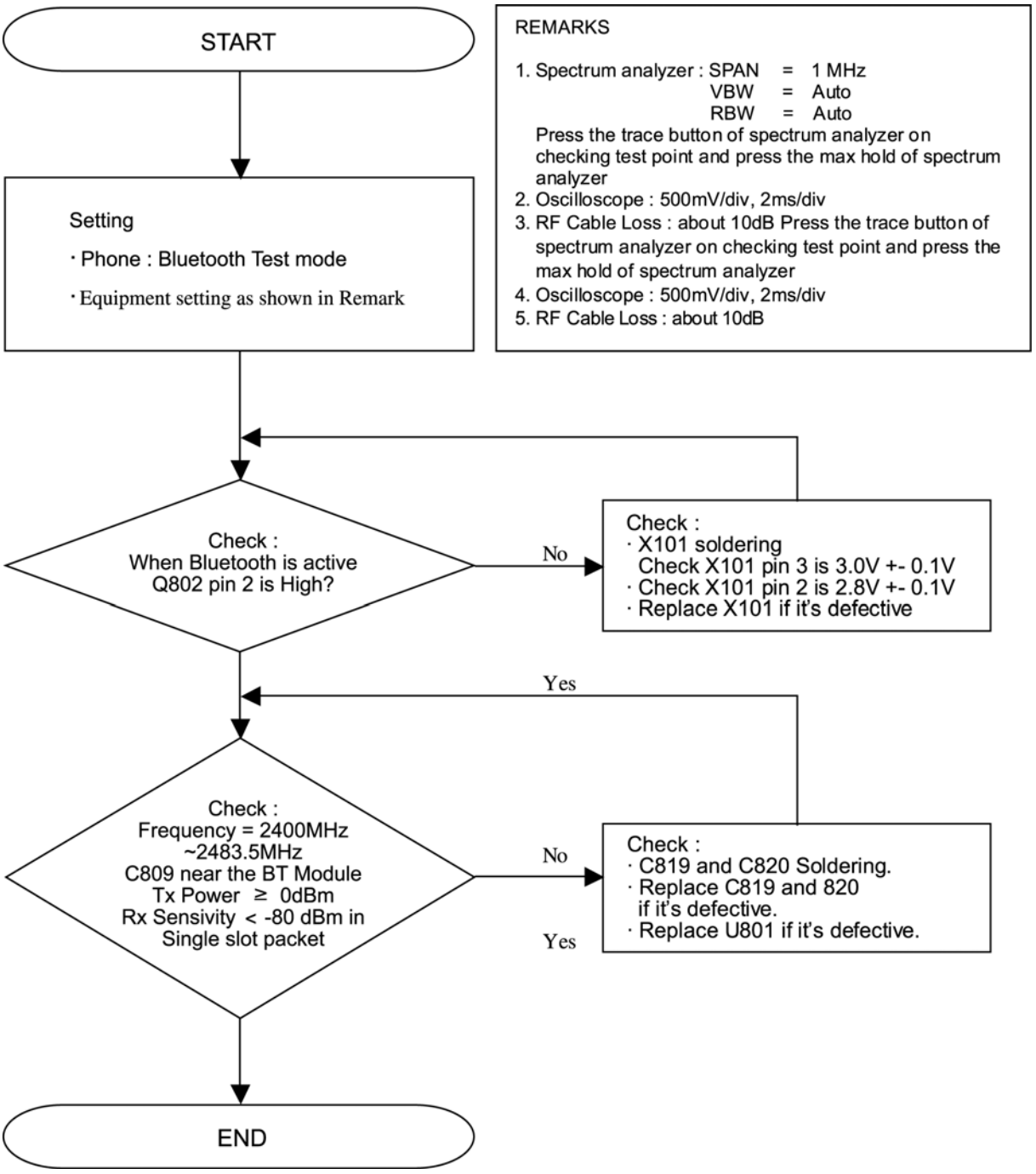

5.15 TX Power Trouble (E-GSM)

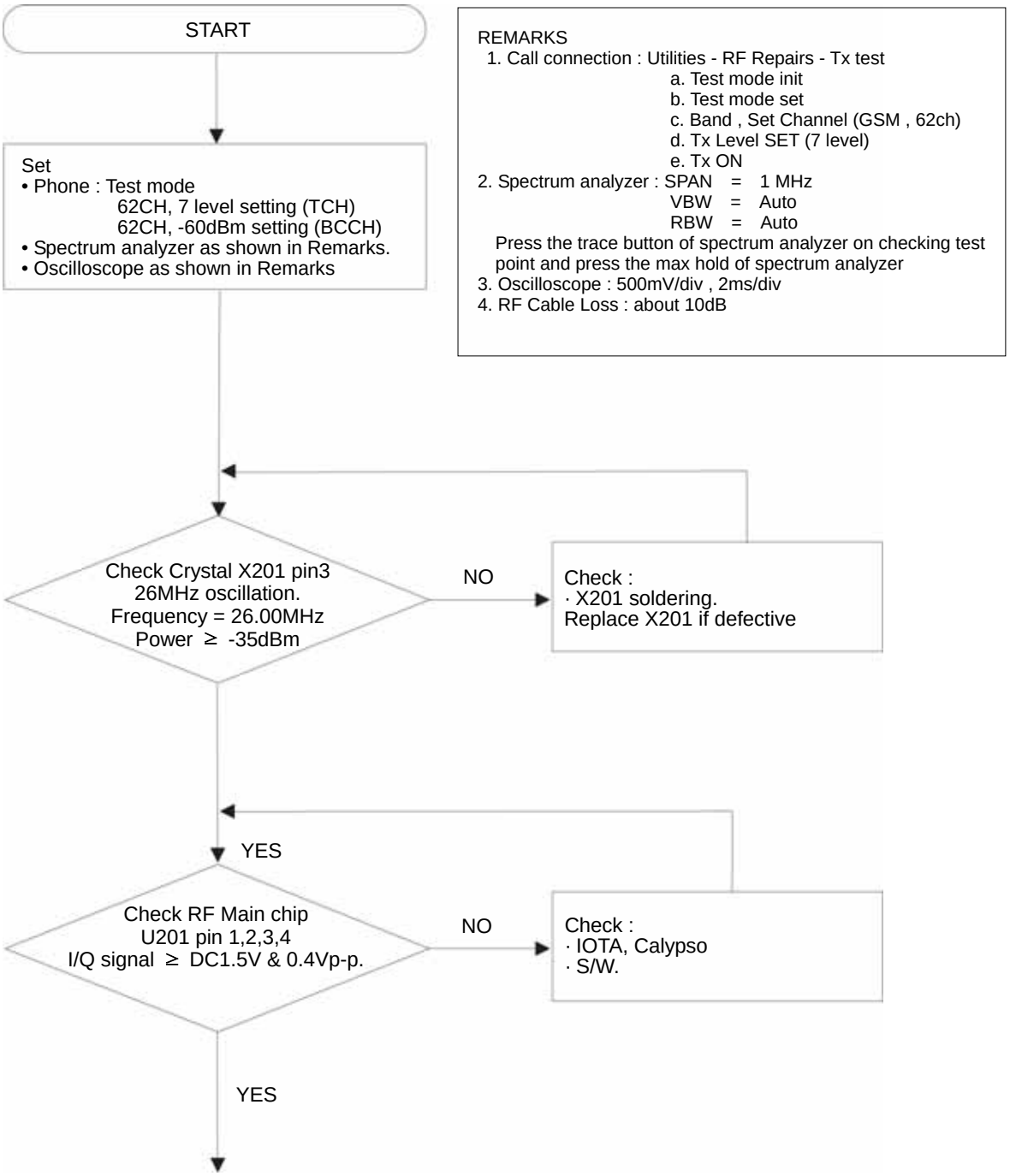

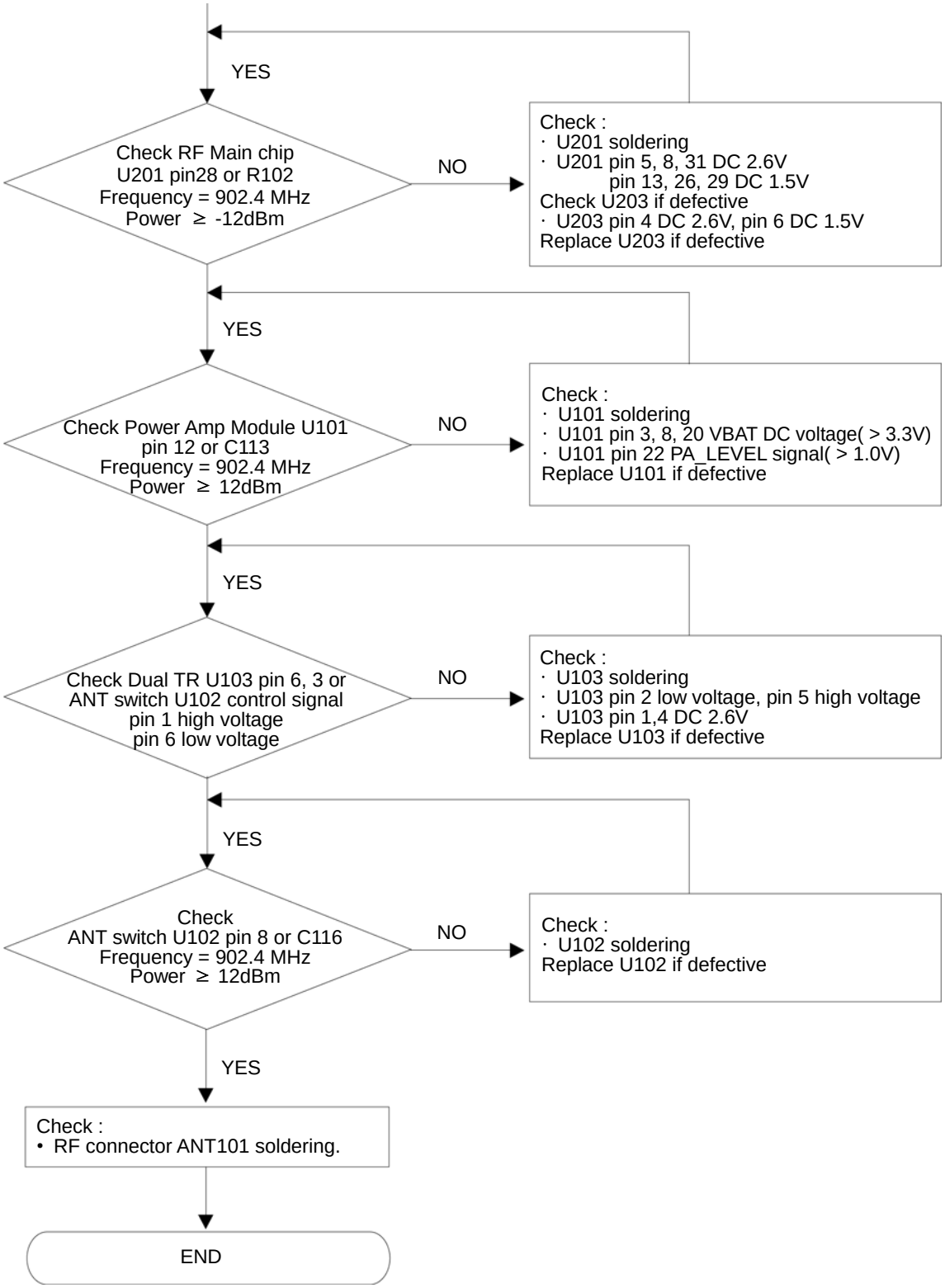
YES
Check RF Main chip
U201 pin28 or R102
Frequency = 902.4 MHz
Power ≥ -12dBm
NO
Check :
· U201 soldering
· U201 pin 5, 8, 31 DC 2.6V
pin 13, 26, 29 DC 1.5V
Check U203 if defective
· U203 pin 4 DC 2.6V, pin 6 DC 1.5V
Replace U203 if defective
YES
Check Power Amp Module U101
pin 12 or C113
Frequency = 902.4 MHz
Power ≥ 12dBm
NO
Check :
· U101 soldering
· U101 pin 3, 8, 20 VBAT DC voltage(> 3.3V)
· U101 pin 22 PA_LEVEL signal(> 1.0V)
Replace U101 if defective
YES
Check Dual TR U103 pin 6, 3 or
ANT switch U102 control signal
pin 1 high voltage
pin 6 low voltage
NO
Check :
· U103 soldering
· U103 pin 2 low voltage, pin 5 high voltage
· U103 pin 1,4 DC 2.6V
Replace U103 if defective
YES
Check
ANT switch U102 pin 8 or C116
Frequency = 902.4 MHz
Power ≥ 12dBm
NO
Check :
· U102 soldering
Replace U102 if defective
YES
Check :
• RF connector ANT101 soldering.
END

5.16 TX Power Trouble (DCS)

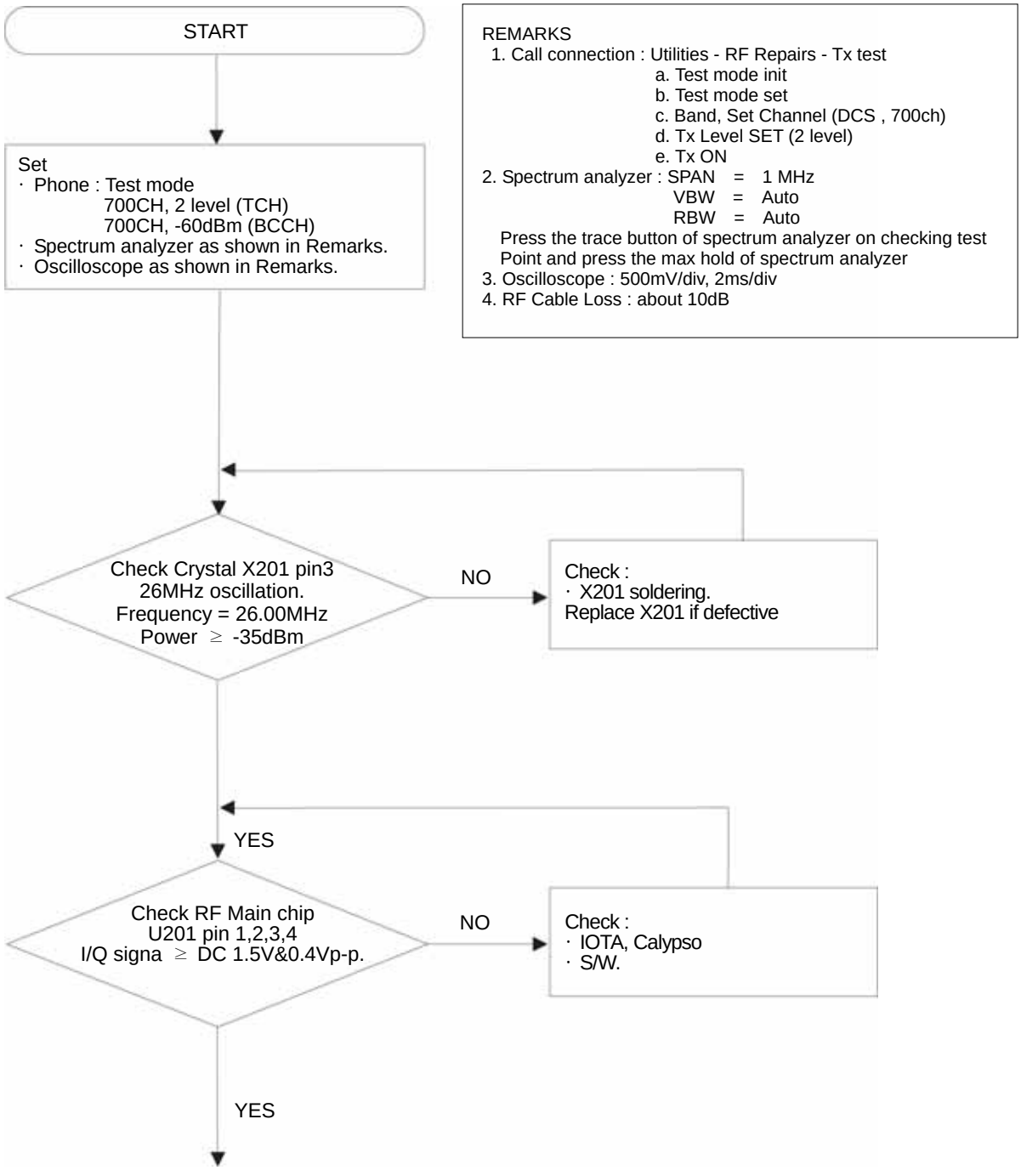

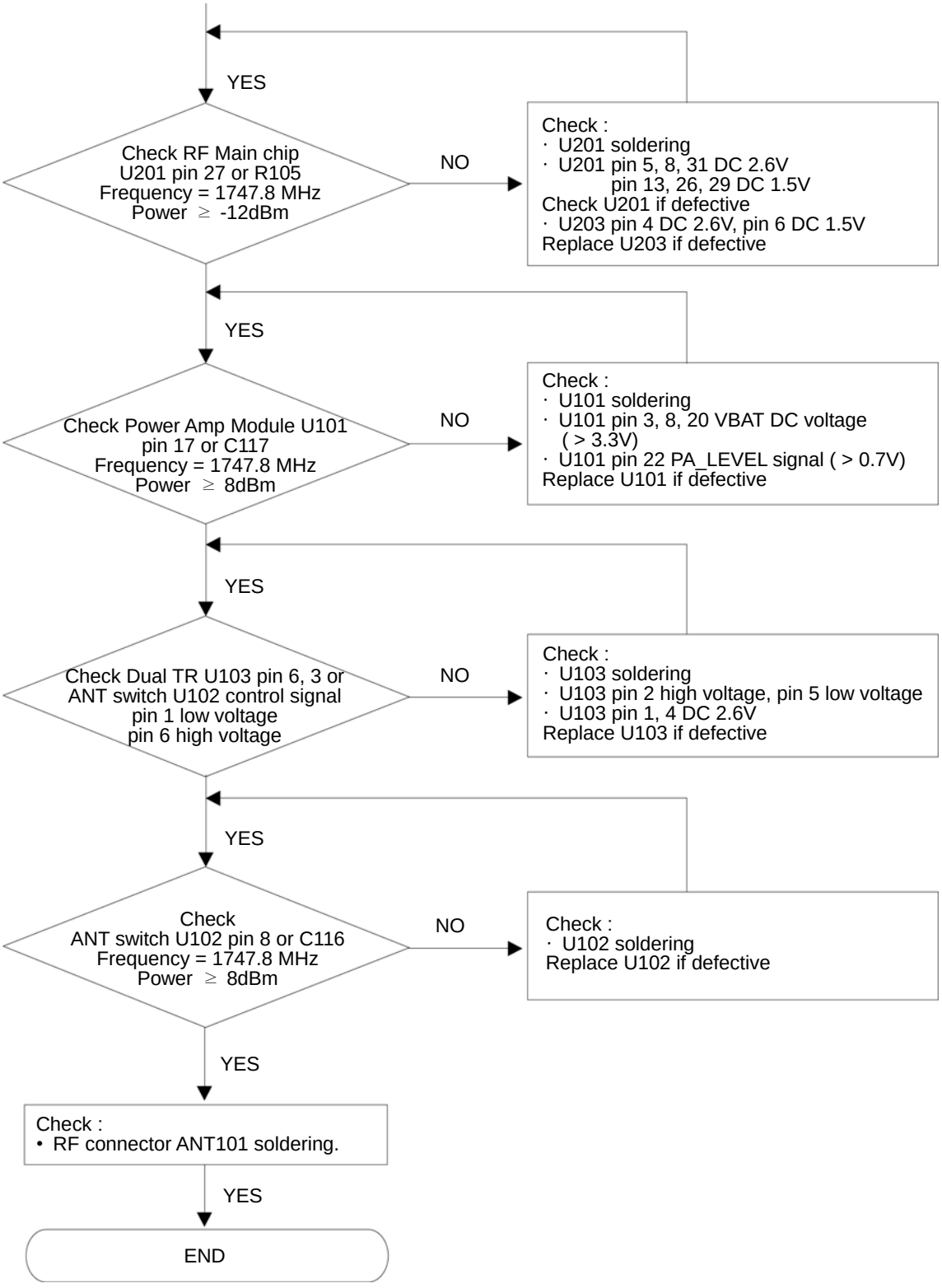
YES
Check RF Main chip
U201 pin 27 or R105
Frequency = 1747.8 MHz
Power ≥ -12dBm
NO
Check :
· U201 soldering
· U201 pin 5, 8, 31 DC 2.6V
pin 13, 26, 29 DC 1.5V
Check U201 if defective
· U203 pin 4 DC 2.6V, pin 6 DC 1.5V
Replace U203 if defective
YES
Check Power Amp Module U101
pin 17 or C117
Frequency = 1747.8 MHz
Power ≥ 8dBm
NO
Check :
· U101 soldering
· U101 pin 3, 8, 20 VBAT DC voltage
(> 3.3V)
· U101 pin 22 PA_LEVEL signal (> 0.7V)
Replace U101 if defective
YES
Check Dual TR U103 pin 6, 3 or
ANT switch U102 control signal
pin 1 low voltage
pin 6 high voltage
NO
Check :
· U103 soldering
· U103 pin 2 high voltage, pin 5 low voltage
· U103 pin 1, 4 DC 2.6V
Replace U103 if defective
YES
Check
ANT switch U102 pin 8 or C116
Frequency = 1747.8 MHz
Power ≥ 8dBm
NO
Check :
· U102 soldering
Replace U102 if defective
YES
Check :
• RF connector ANT101 soldering.
YES
END

5.17 RX Sensitivity Trouble (E-GSM)

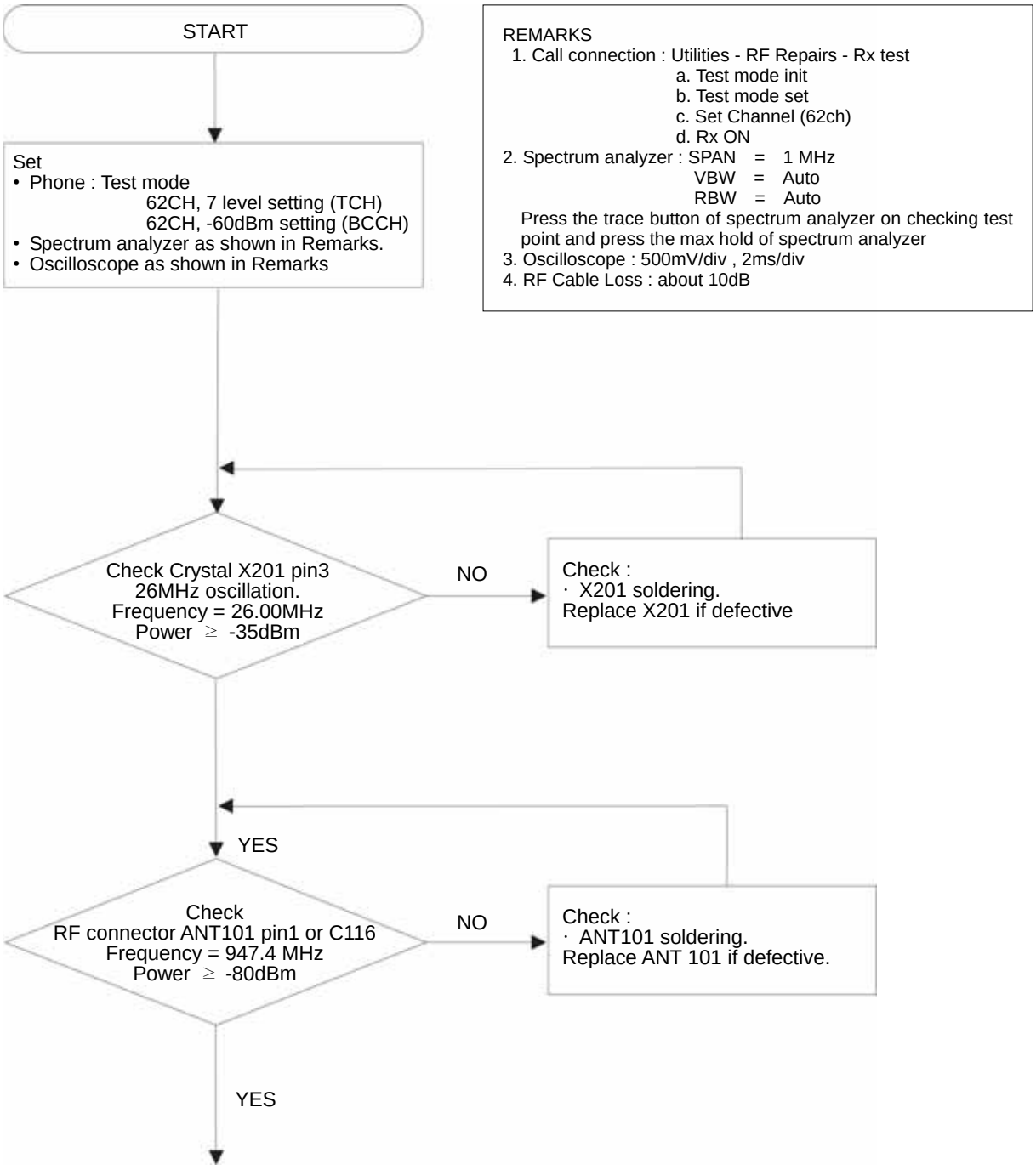

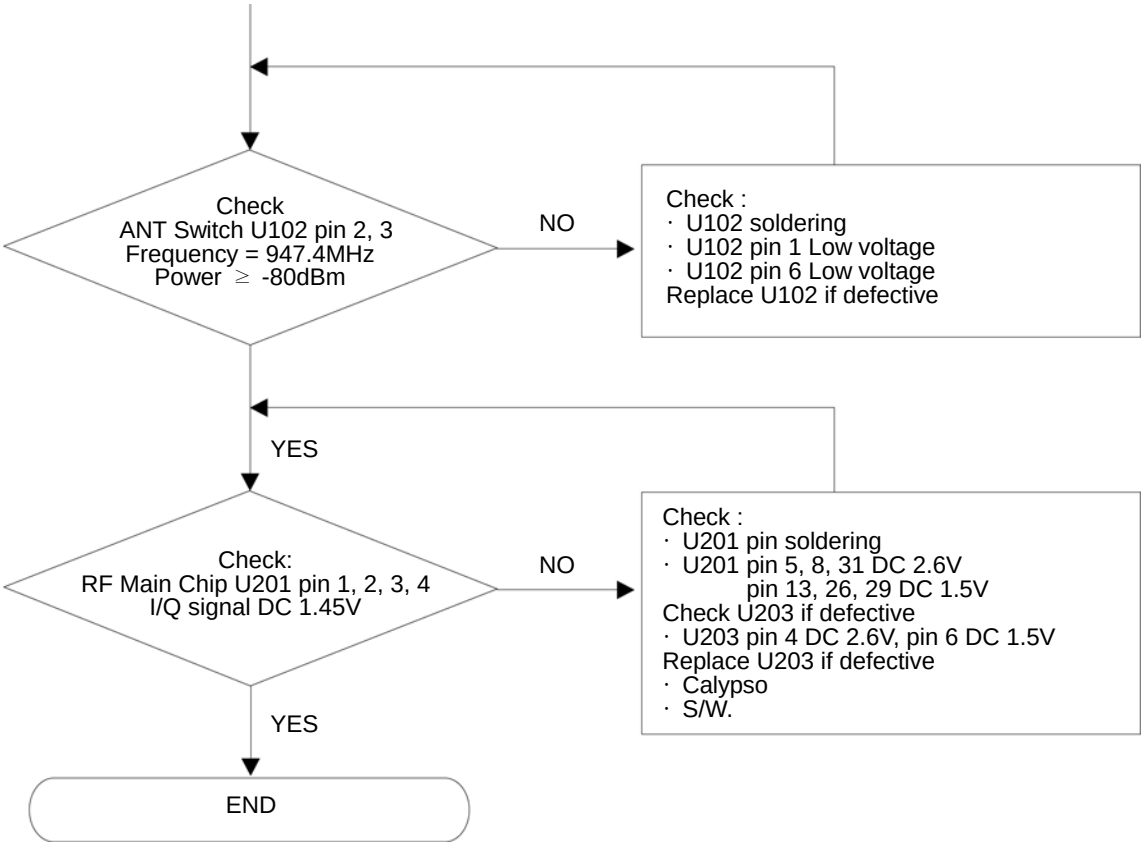
Check
ANT Switch U102 pin 2, 3
Frequency = 947.4MHz
Power ≥ -80dBm
NO
Check :
· U102 soldering
· U102 pin 1 Low voltage
· U102 pin 6 Low voltage
Replace U102 if defective
YES
Check:
RF Main Chip U201 pin 1, 2, 3, 4
I/Q signal DC 1.45V
NO
Check :
· U201 pin soldering
· U201 pin 5, 8, 31 DC 2.6V
pin 13, 26, 29 DC 1.5V
Check U203 if defective
· U203 pin 4 DC 2.6V, pin 6 DC 1.5V
Replace U203 if defective
· Calypso
· S/W.
YES
END

5.18 RX Sensitivity Trouble (DCS)

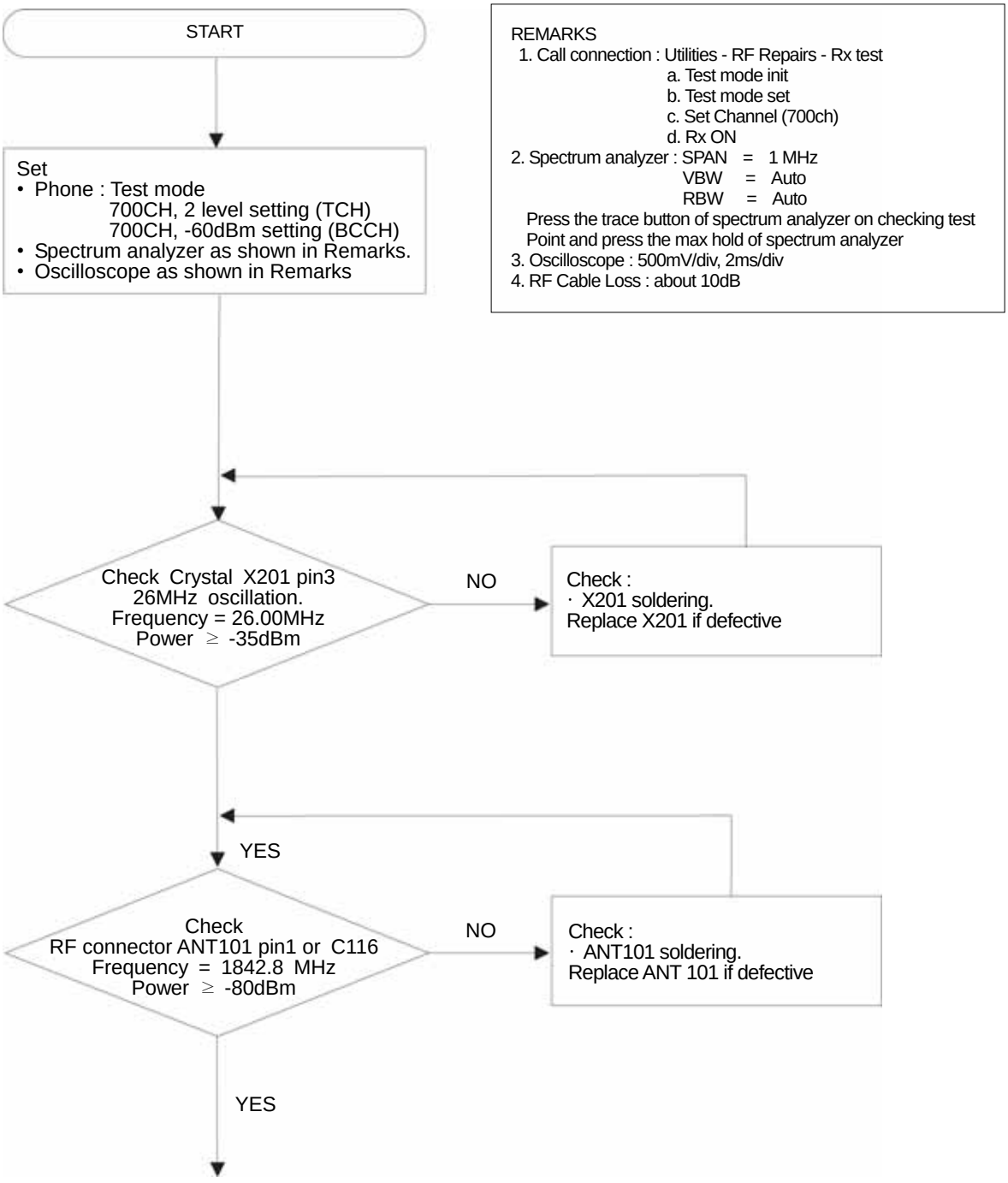

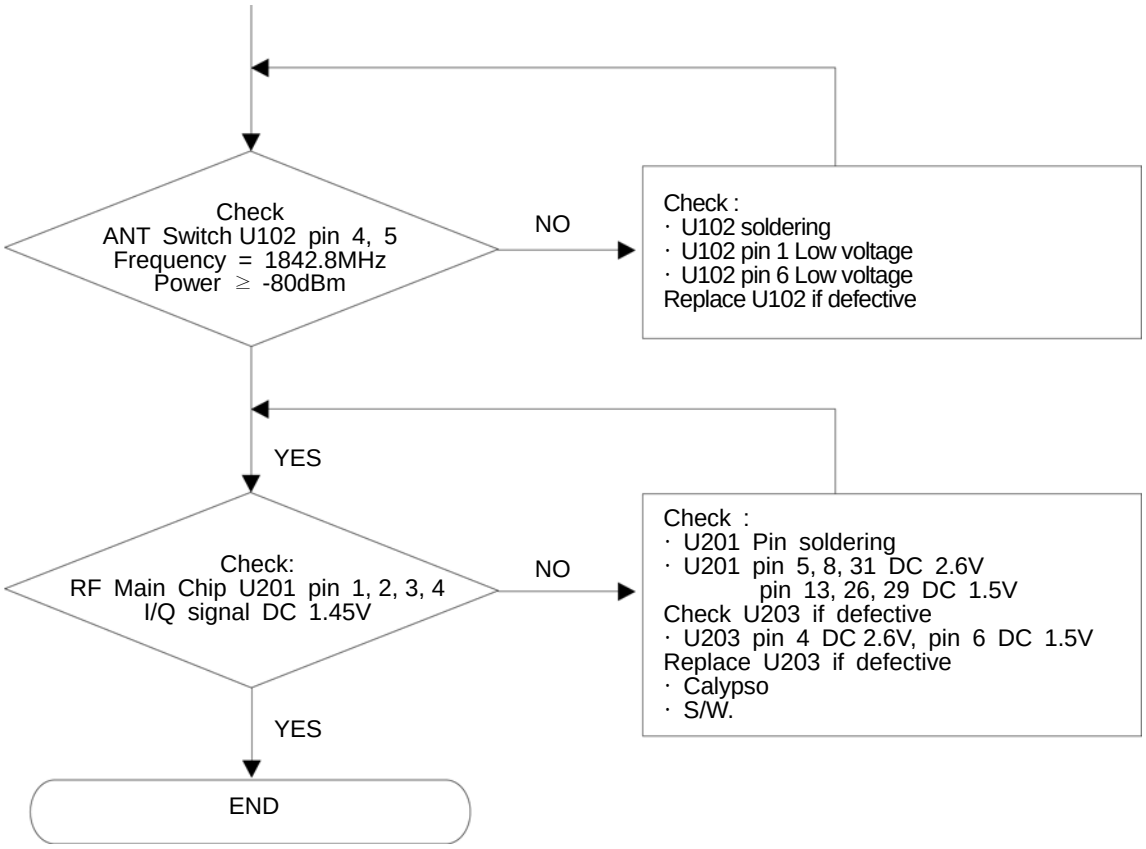
Check
ANT Switch U102 pin 4, 5
Frequency = 1842.8MHz
Power ≥ -80dBm
NO
Check :
· U102 soldering
· U102 pin 1 Low voltage
· U102 pin 6 Low voltage
Replace U102 if defective
YES
Check:
RF Main Chip U201 pin 1, 2, 3, 4
I/Q signal DC 1.45V
NO
Check :
· U201 Pin soldering
· U201 pin 5, 8, 31 DC 2.6V
pin 13, 26, 29 DC 1.5V
Check U203 if defective
· U203 pin 4 DC 2.6V, pin 6 DC 1.5V
Replace U203 if defective
· Calypso
· S/W.
YES
END

Memo

6. Block Diagram

6.1 BB Block Diagram

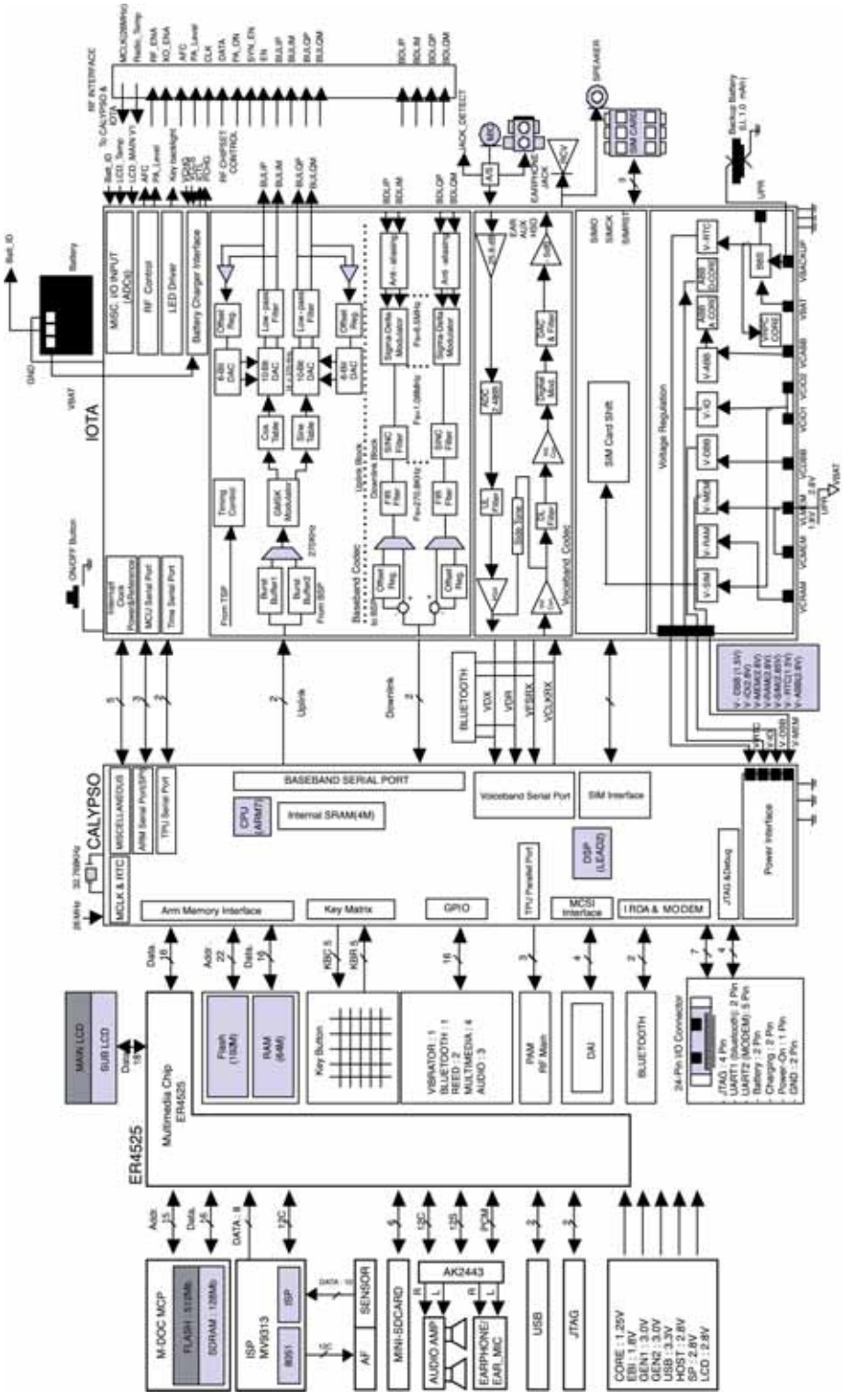

6.2 RF Block Diagram

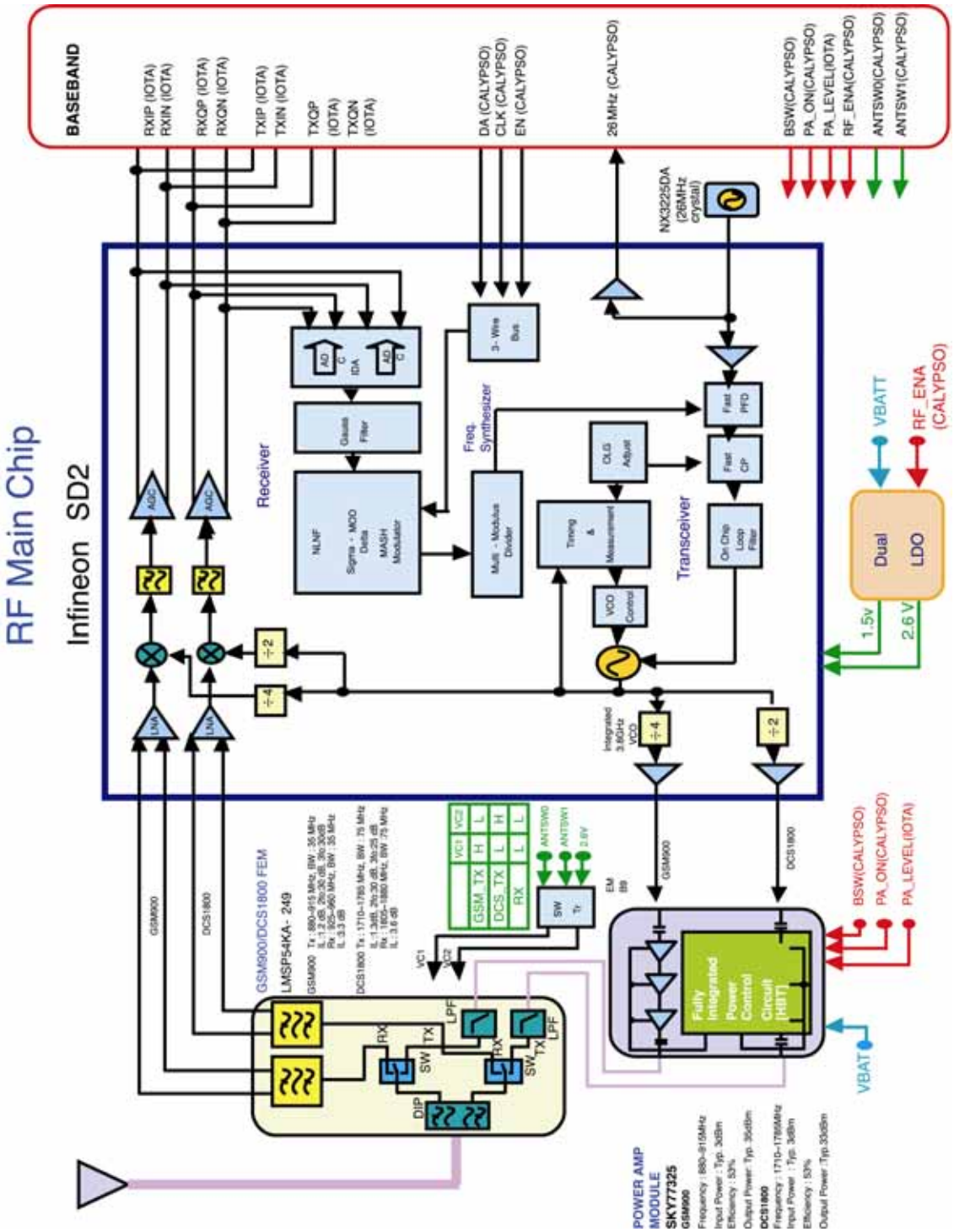

7. Schematic Diagram

7.1 Key Pad

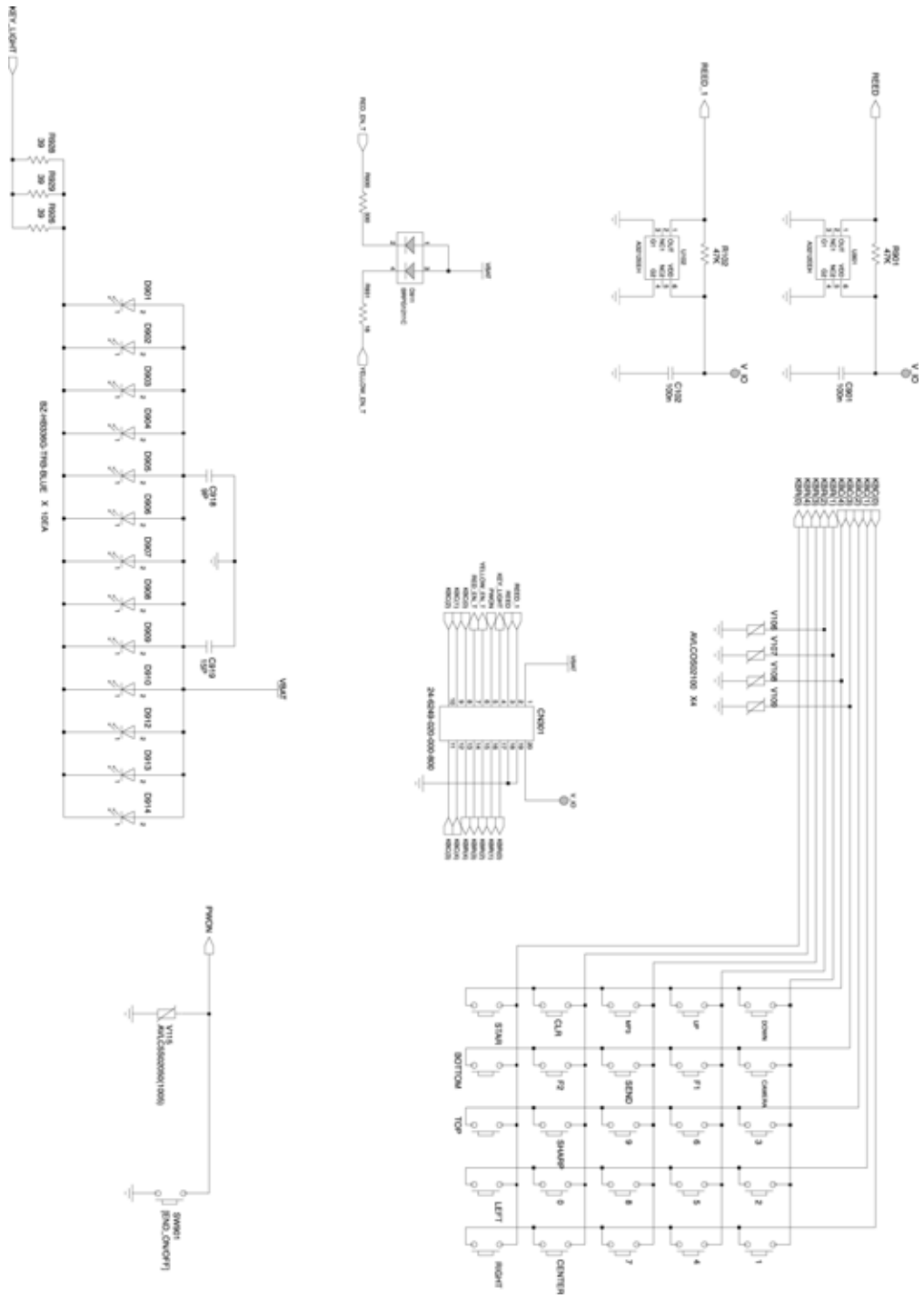

7.2 Main Board

7.2.1 Chipset (Calypso & IOTA)

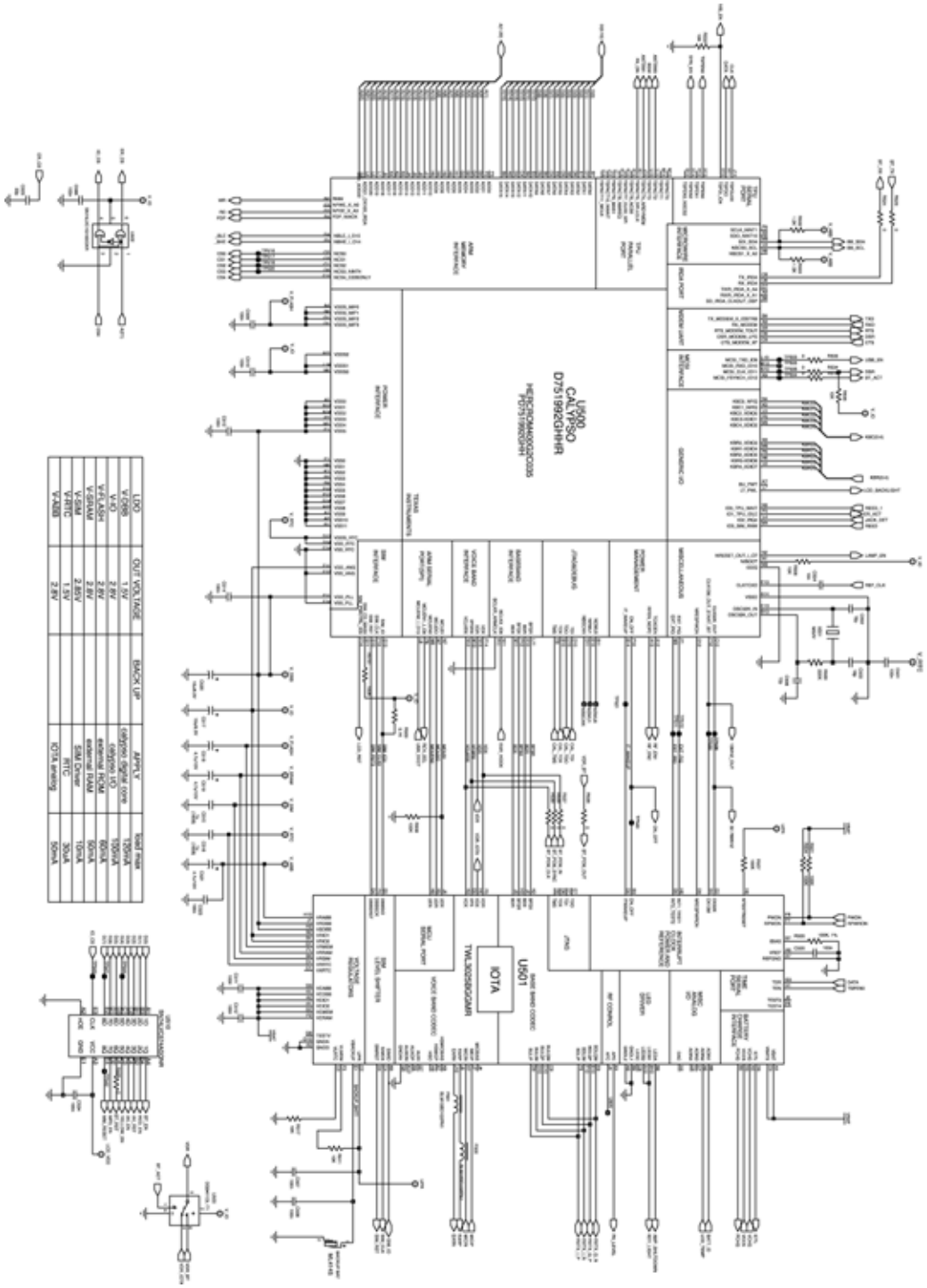

7.2.2 Memory

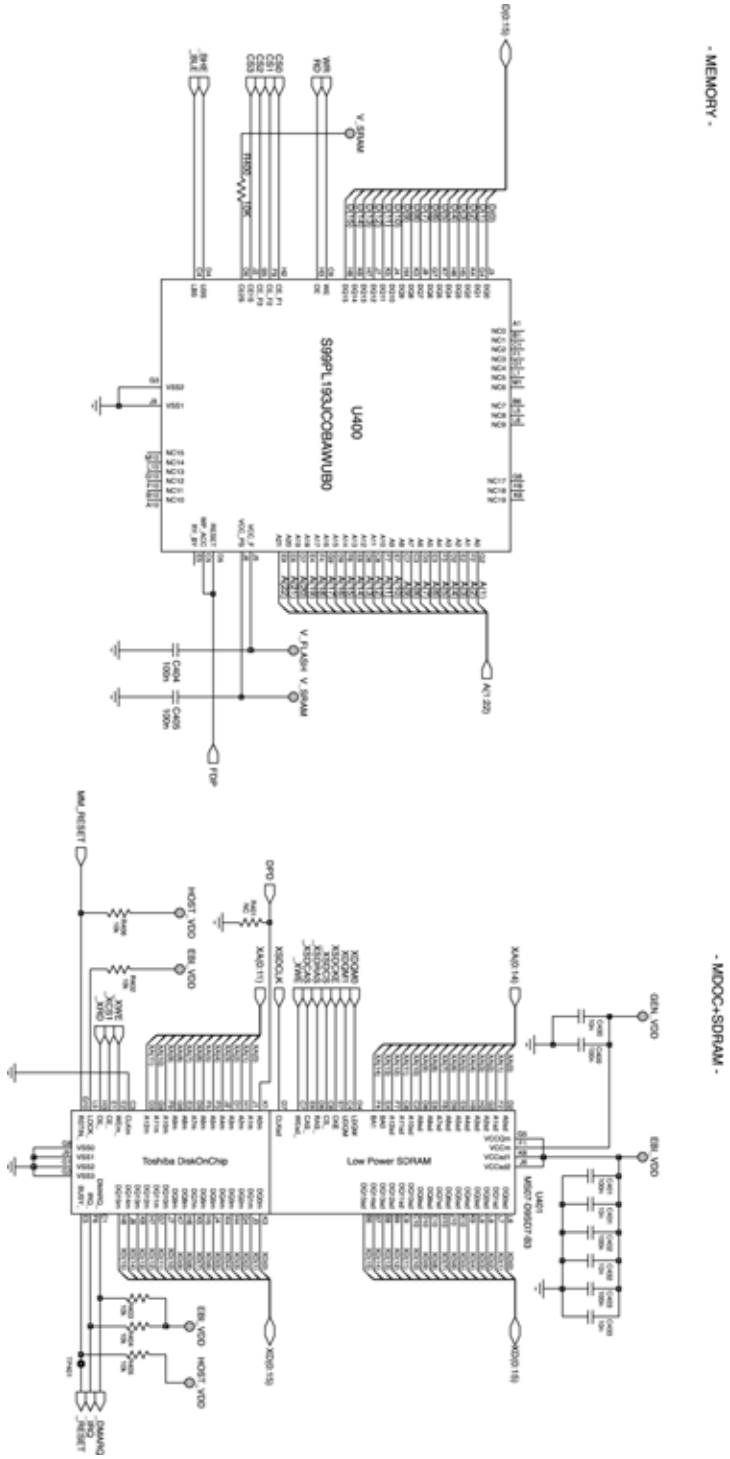
- MEMORY -
U400
S99PL193JC0BAW1UB0
- MDOC+SDRAM -
Toshiba DiskOnChip
Low Power SDRAM

7.2.3 Audio & MP3

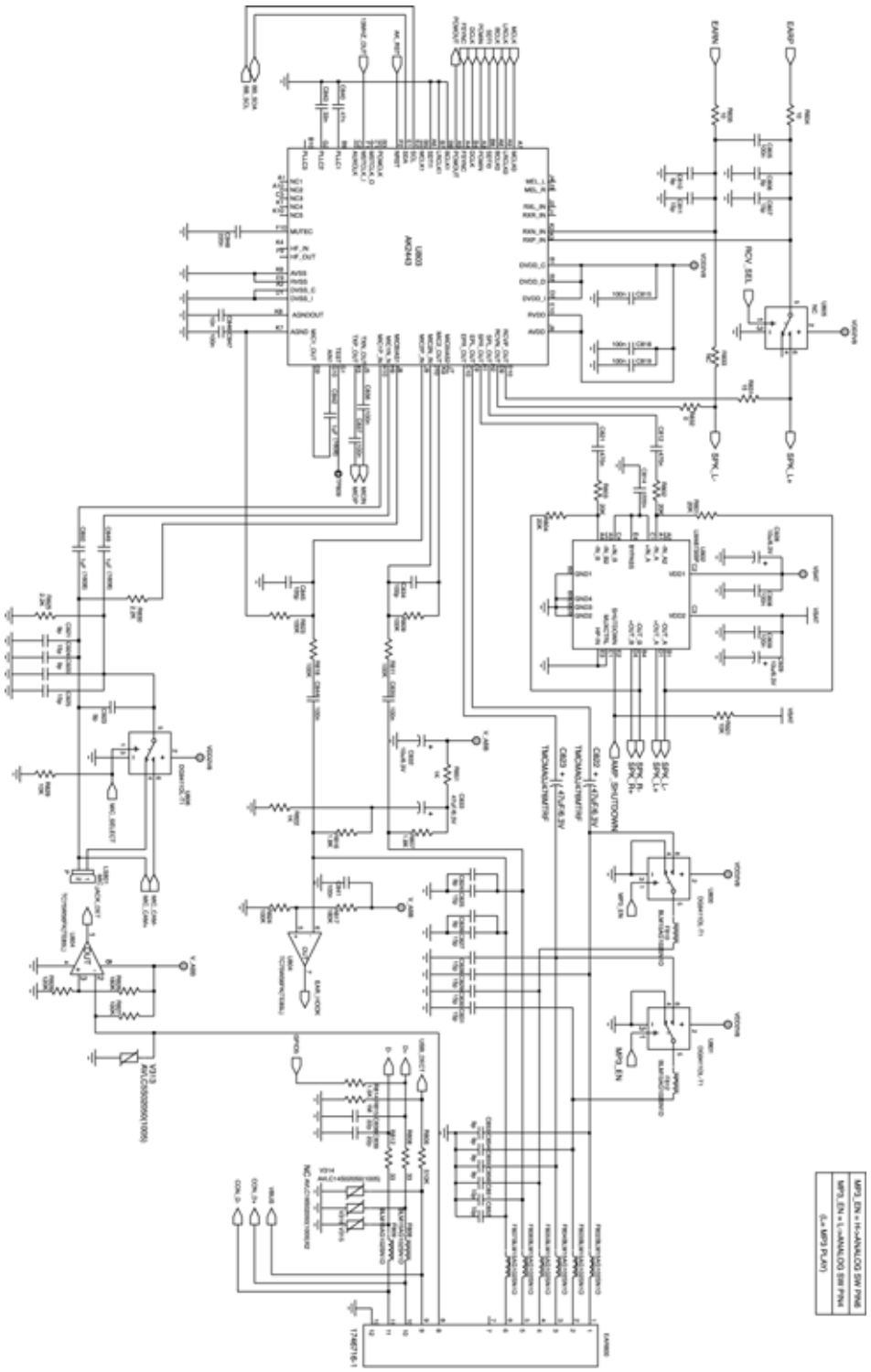

7.2.4 Camera

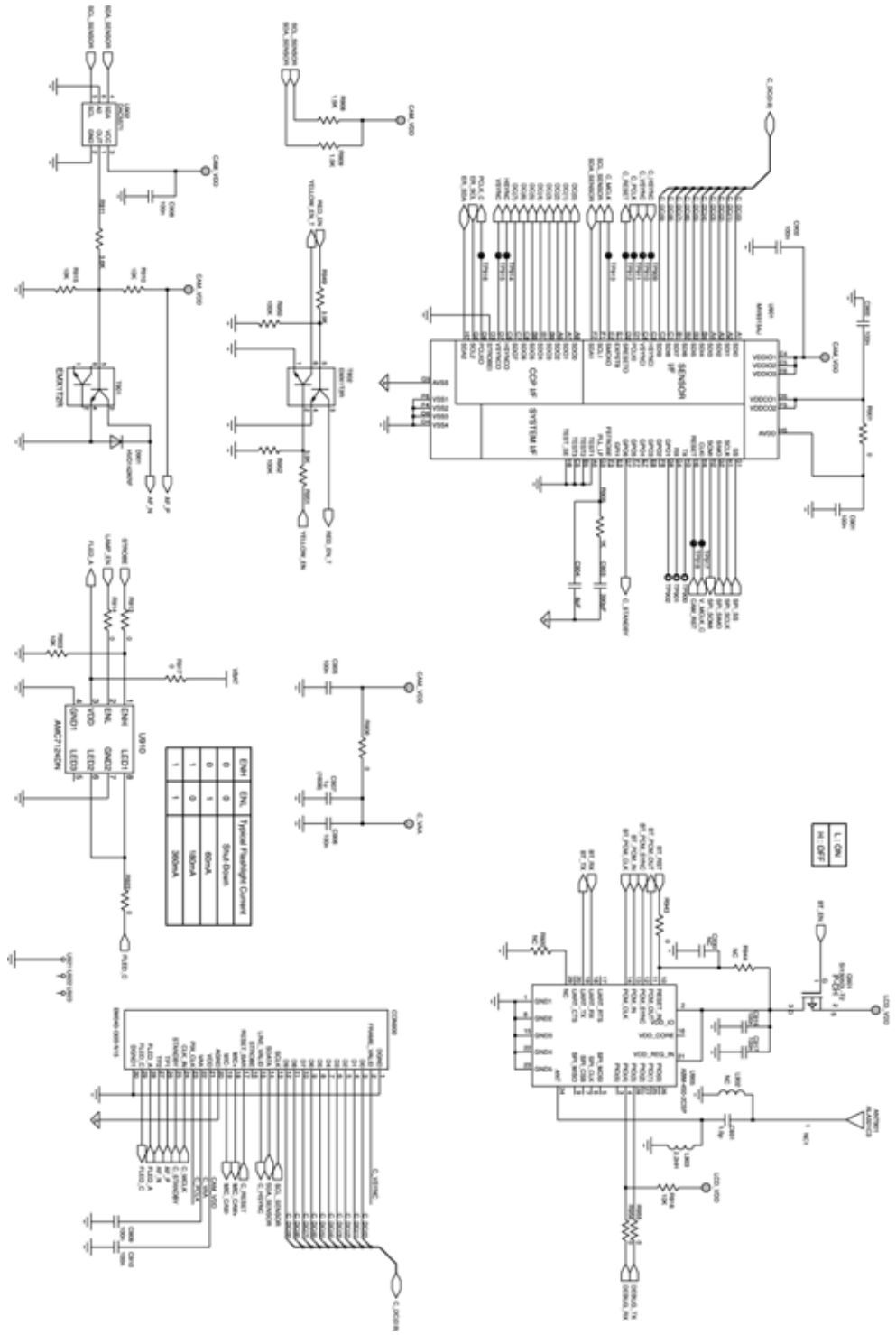

7.2.5 I/O & B'd to LCD Connector & SIM Interface

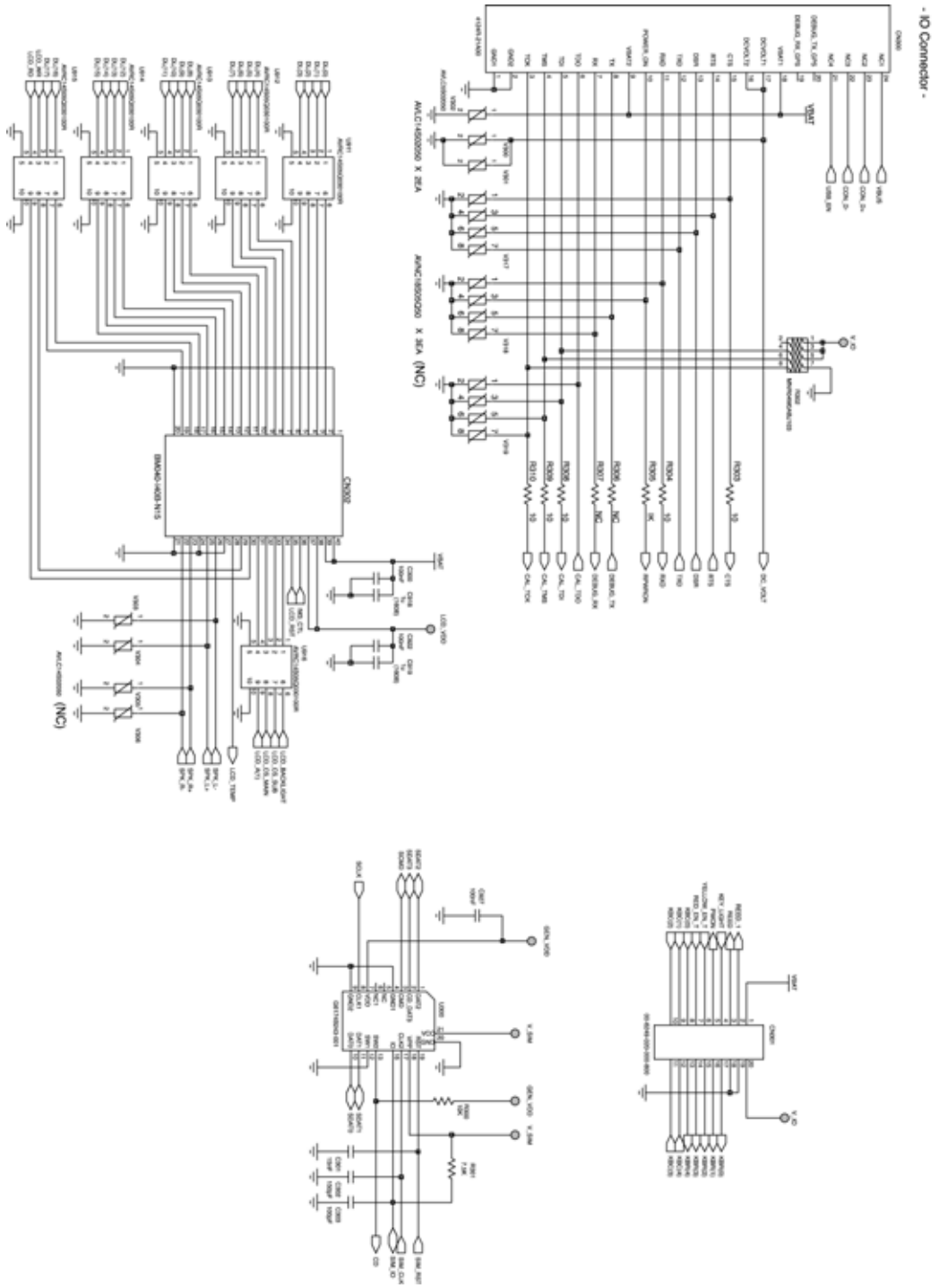

7.2.6 Multimedia Chipset

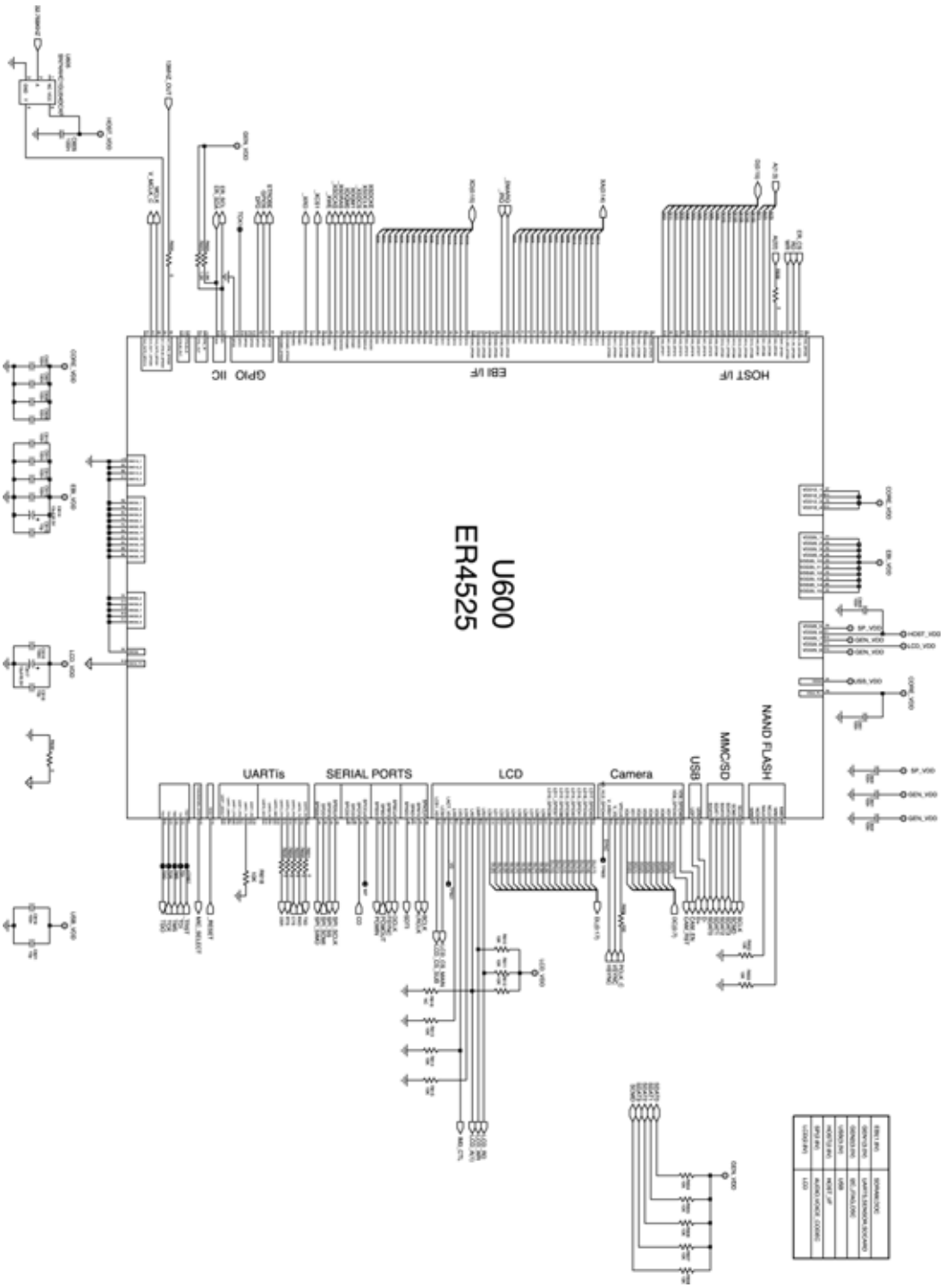

7.2.7 Power Management & Charger

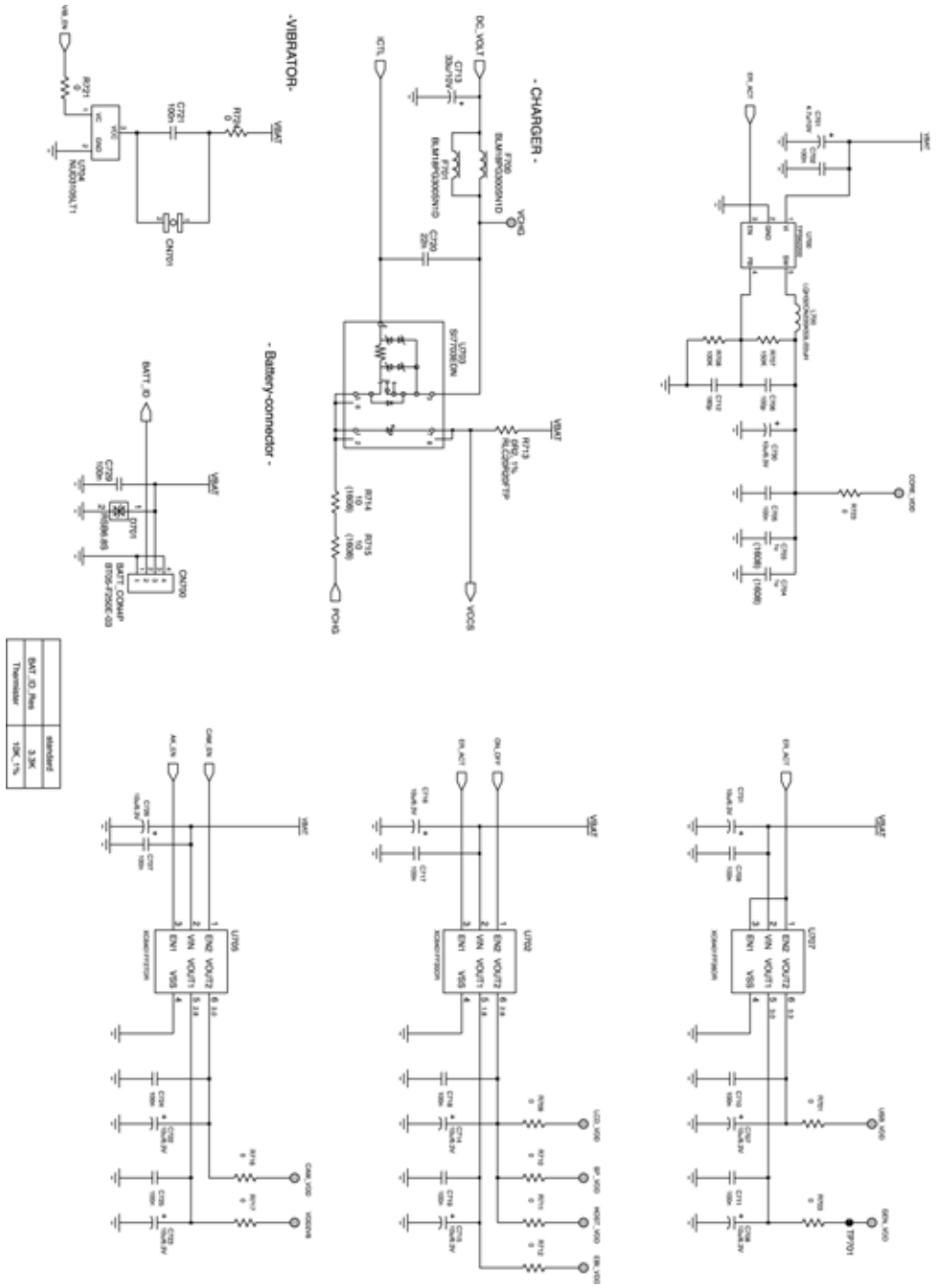

7.3 RF Schematic

7.3.1 RF PAM

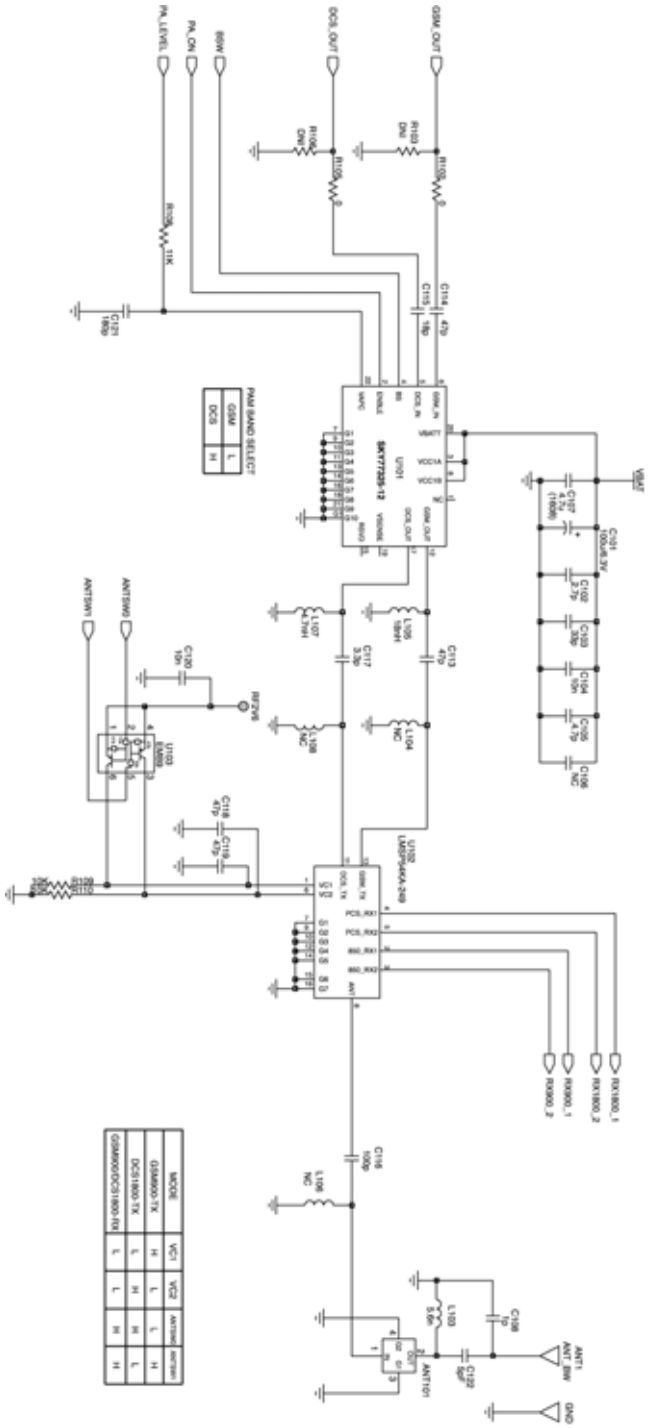

7.3.2 RF Main IC

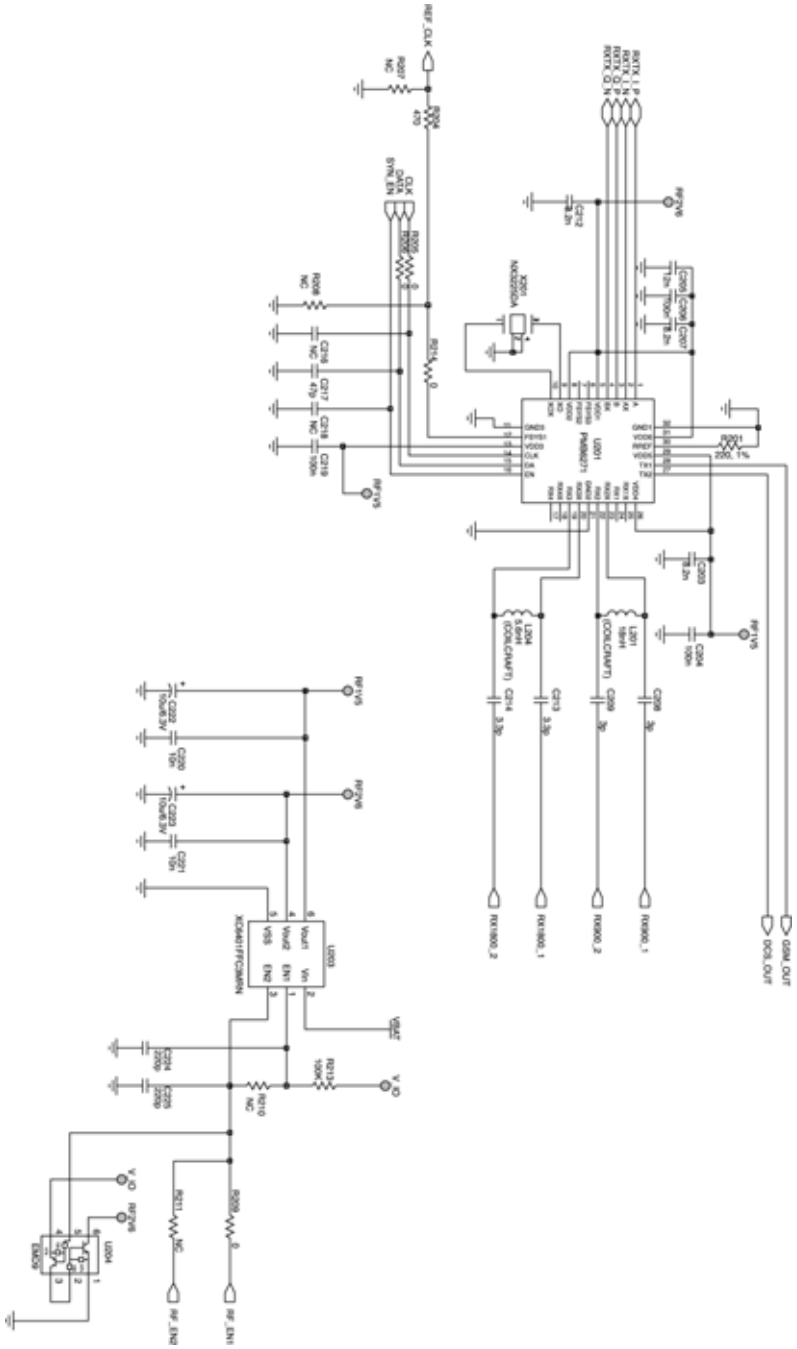

Memo

8. PCB Diagram

8.1 Main PCB

Top View

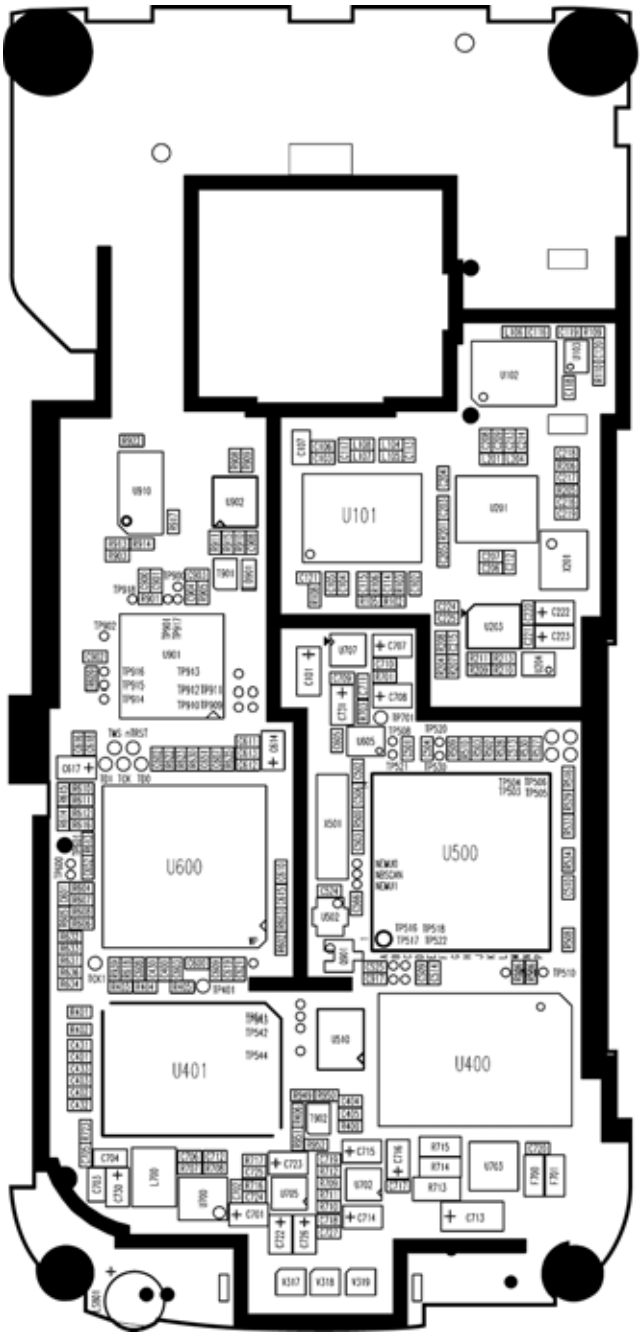

Bottom View

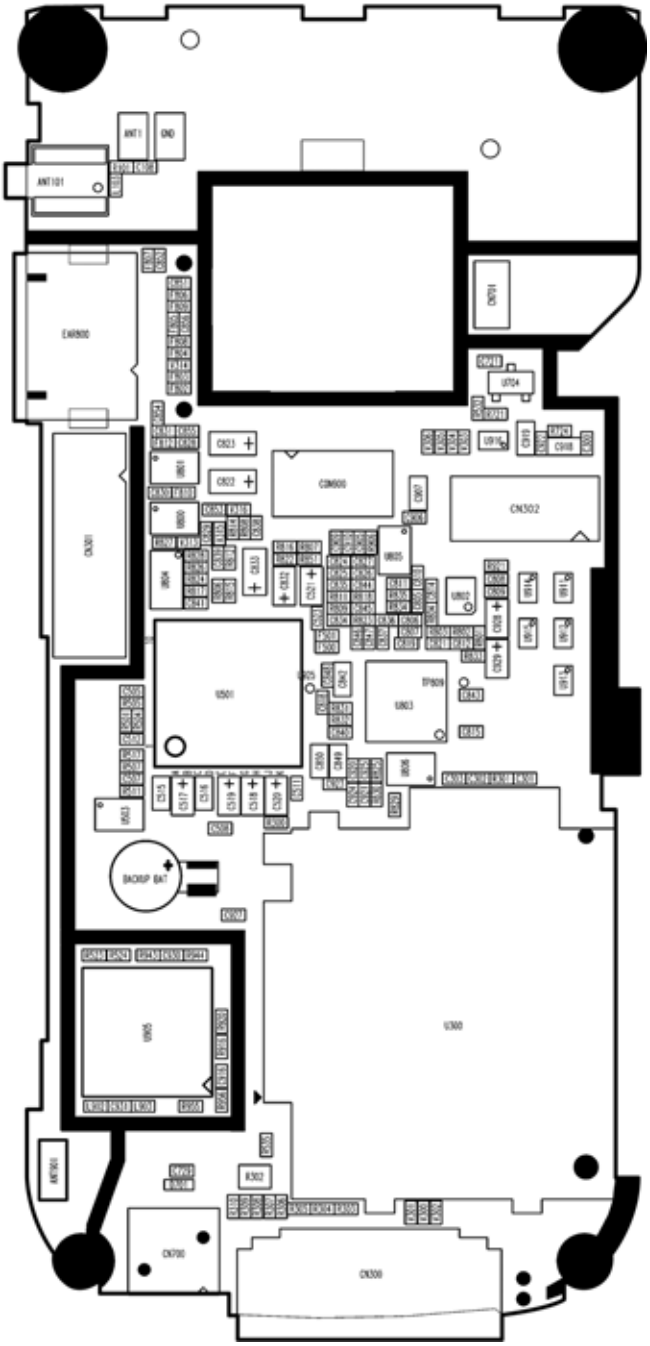

8.2 Key FPCB

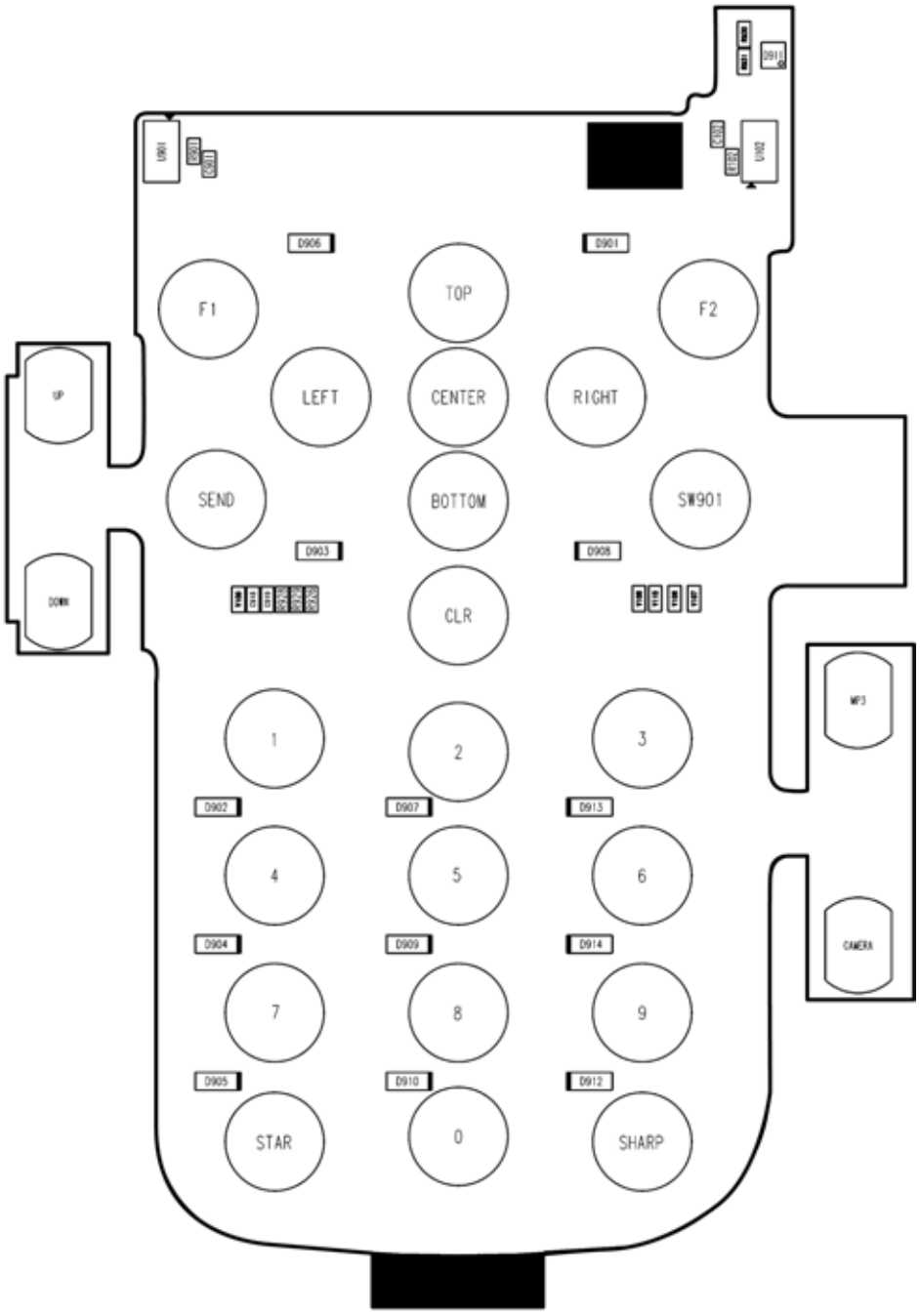
F1
TOP
F2
UP
LEFT
CENTER
RIGHT
SEND
BOTTOM
SW901
DOWN
CLR
MP3
1
2
3
4
5
6
CAMERA
7
8
9
STAR
0
SHARP

9. Parts List

9.1 Electrical Parts List (Circuit) - Main

REF NO.	DESCRIPTION	PART NUMBER
ANT101	COXIOL CONNECTOR	CRS5001-1702
U101	POWER AMP MODULE	SKY77325-12
U102	ANT SWITCH	LMSP54KA-249
U103	TR DUAL TYPE	EMB9 T2R
U201	RF MAIN CHIP	PMB6271
U203	DUAL LDO (1.5V / 2.6V)	XC6401FFC3MRN
U204	TR DUAL(NPN+PNP)TYPE, Built in Resistor	EMD9 T2R
U702	DUAL LDO (1.8V / 2.8V) XC6401EE180280	XC6401FF20DR
U705	DUAL LDO (2.8V / 3.0V) XC6401FF280300	XC6401FF27DR
U707	DUAL LDO (3.0V / 3.3V) XC6401FF300330	XC6401FF26DR
U400	192 X 64 FLASH MEMORY (J VERSION)	S99PL193JCOBAWUB0
U401	M-DOC, 1.8V	MS07-D9SD7-B3
U500	BASEBAND MAIN CHIP 1 (Calypso)	D751992GHHR
U501	BASEBAND MAIN CHIP 2 (IOTA A07)	TWL3025BGGMR
U600	MULTI MEDIA CHIP	ER4525
U911 U912 U913 U914 U915 U916	EMI FILTER	AVRC14S05Q030100R
U300	SERIES DUPLI SOCKET CONNECTOR (SIM+SDMEMORY)	G6174B243-001
U605	INVERTOR	SN74AHC1GU04DCKR
U703	CHARGER IC	SI7703EDN
U704	VIBRATOR DRIVER IC	NUD3105LT1
U700	STEP DOWN, DC-DC CONVERTER	TPS62200

REF NO.	DESCRIPTION	PART NUMBER
U502	DECODER (1-of-2 Decoder/Demultiplexer)	SN74LVC1G19DCKR
U510	FLIP FLOP	SN74LVC574AGQNR
U503 U800 U801 U806	ANALOG SWITCH	DG9411DL-T1
U802	STEREO AUDIO AMP	LM4873IBLX
U803	AUDIO CODEC	AK2443-L
U804	COMPARATOR DUAL	TC75W56FK(TE85L)
T901 T902	TR DUAL TYPE (NPN+NPN)	EMX1 T2R
U901	ISP	MV9313AJ
U902	DA Converter	DAC5571
U905	BLUETOOTH IC	ABM-450-2CSP
ANT901	BLUETOOTH ANTENA	ALA321C3
U910	FLASH LIGHT LED DRIVER	AMC7124DN
CN300	SYSTEM I/O CONNECTOR, 24Pin	4124R-21A00
CN302	B2B CONNECTOR, 40Pin (MALE), 1.5t	BM040-I40B-N15
CON900	CAMERA CONNECTOR, 30Pin (MALE), 1.5t	BM040-I30B-N15
CN301	Side key CONNECTOR, 20Pin, 1.5t	00-6249-020-000-800
CN700	BATTERY CONNECTOR, 3Pin	BT05-F250E-03
EAR800	12 POLE EAR JACK	1746716-1 1746717-1
X201	X-TAL 26MHz	NX3225DA
X501	X-TAL 32.768KHz	MS2V-T1S
F500 F501	FERRITE BEADS (1005)	BLM15BD102PN1 BLM15BD102SN1D
F802 F803 F804 F805 F806 F807 F808 F809 F810 F812	FERRITE BEADS (1005)	BLM10A102SGPT BLM15AG102SN1D

REF NO.	DESCRIPTION	PART NUMBER
F700 F701	FERRITE BEADS (1608)	BLM11P300SPT BLM18PG300SN1D
V300 V301	VARISTOR 1005 SIZE (50pF)	AVLC14S02050
V302 V313	VARISTOR 1005 SIZE (50pF)	AVLC5S02050
D701	TVS DIODE	RSB6.8S
D901	DIODE	HVD142KRF
Q901	P-Channel MOSFET	Si1305DL-T2
C518 C519 C521 C701	TAN_CAP 4.7uF/10V(P)	TMCRP1A475MTRY
C222 C223 C517 C520 C614 C617 C707 C708 C714 C715 C716 C722 C723 C726 C730 C731 C832 C928 C929	TAN_CAP 10uF/6.3V(P)	TMCRP0J106MTRY
C713	TAN_CAP 33uF/10V	F951A336MAAAQ2
C822 C823 C833	TAN_CAP 47uF/6.3V(A)	TMCMAOJ476MTRF
C101	TAN_CAP 100uF/6.3V	F950J107MAAAQ2
L903	CHIP INDUCTOR (1005) 2.2nH	HK1005 2N2S
L107	CHIP INDUCTOR (1005) 4.7nH	HK1005 4N7S
L103	CHIP INDUCTOR (1005) 5.6nH	HK1005 5N6S
L105	CHIP INDUCTOR (1005) 18nH	HK1005 18NJ
L204	CHIP INDUCTOR (1005) 5.6nH	0402CS_5N6XJBW
L201	CHIP INDUCTOR (1005) 18nH	O402CS_18NXJBW
L700	CHIP INDUCTOR 22uH	LQH32CN220K53L
C108	CAP. CERAMIC CHIP 1.0pF	GRM36C0G 010D 50PN GRP1555C1H1R0CZ01E
C931	CAP. CERAMIC CHIP 1.5pF	GRM36C0G 1R5C 50PN GRP1555C1H1R5CZ01E

REF NO.	DESCRIPTION	PART NUMBER
C102	CAP. CERAMIC CHIP 2.7pF	GRM36C0G 2R7C 50PN GRP1555C1H2R7CZ01E
C208 C209	CAP. CERAMIC CHIP 3.0pF	GRM36C0G 3R0C 50PN GRP1555C1H3R0CZ01E
C117 C213 C214	CAP. CERAMIC CHIP 3.3pF	GRM36C0G 3R3C 50PN GRP1555C1H3R3CZ01E
C105	CAP. CERAMIC CHIP 4.7pF	GRM36C0G 4R7C 50PN GRP1555C1H4R7CZ01E
C122	CAP. CERAMIC CHIP 5pF	GRM36C0G 050D 50PN GRP1555C1H5R0CZ01E
C904	CAP. CERAMIC CHIP 8pF	GRM36C0G 080D 50PN GRP1555C1H8R0DZ01E
C806 C810 C824 C826 C920 C921 C923 C853 C854 C855 C856	CAP. CERAMIC CHIP 9pF	GRM36C0G 090D 50PN GRP1555C1H9R0DZ01E
C615 C618 C621 C851 C852	CAP. CERAMIC CHIP 10pF	GRM36C0G 100D 50PN GRP1555C1H100JZ01E
C506	CAP. CERAMIC CHIP 12pF	GRM36C0G 120J 50PN GRP1555C1H120JZ01E
C807 C811 C825 C827 C828 C829 C830 C831 C924 C925	CAP. CERAMIC CHIP 15pF	GRM36C0G 150J 50PN GRP1555C1H150JZ01E
C115 C502 C503	CAP. CERAMIC CHIP 18pF	GRM36C0G 180J 50PN GRP1555C1H180JZ01E
C525 C838 C839	CAP. CERAMIC CHIP 22pF	GRM36C0G 220J 50PN GRP1555C1H220JZ01E
C103	CAP. CERAMIC CHIP 33pF	GRM36C0G 330J 50PN GRP1555C1H330JZ01E

REF NO.	DESCRIPTION	PART NUMBER
C113 C114 C118 C119 C217	CAP. CERAMIC CHIP 47pF	GRM36C0G 470J 50PN GRP1555C1H470JZ01E
C116 C303 C706 C834 C845	CAP. CERAMIC CHIP 100pF	GRM36C0G 101J 50PN GRP1555C1H101JD01E
C302	CAP. CERAMIC CHIP 150pF	GRM36C0G 151J 50PN GRP1555C1H151JD01E
C121 C712	CAP. CERAMIC CHIP 180pF	GRM36C0G 181J 50PN GRP1556C1E181JD01E
C224 C225	CAP. CERAMIC CHIP 220pF	GRM36X7R 221K 50PN GRP155R71H221KD01E
C903	CAP. CERAMIC CHIP 390pF	GRM36X7R 391K 50PN GRP155R71H391KD01E
C203 C207 C212	CAP. CERAMIC CHIP 8.2nF	GRM155R71E822KD01E GRP155R71E822KD01E
C104 C120 C220 C221 C430 C431 C432 C433 C504 C846	CAP. CERAMIC CHIP 10nF	GRM36X7R 103K 16PN GRP155R71C103KA01E
C205	CAP. CERAMIC CHIP 12nF	GRM36X7R 123K 16PN GRP155R71C123KA01E
C301	CAP. CERAMIC CHIP 15nF	GRM36X7R 153K 16PN GRP155R71C153KA01E
C720	CAP. CERAMIC CHIP 22nF	GRM36X7R 223K 16PN GRP155R71C223KA01E
C843	CAP. CERAMIC CHIP 33nF	GRM36X7R 333K 16PN GRP155R71A333KA01E
C840	CAP. CERAMIC CHIP 47nF	GRM36X7R 473K 10PN GRP155R71A473KA01E

REF NO.	DESCRIPTION	PART NUMBER
C204 C206 C219 C300 C400 C401 C402 C403 C404 C405 C501 C505 C507 C508 C509 C510 C511 C512 C513 C514 C523 C524 C566 C600 C601 C602 C603 C605 C607 C608 C609 C610 C611 C612 C613 C616 C619 C651 C652 C702 C705 C709 C710 C711 C717 C718 C719 C721 C724 C725 C727 C729 C805 C808 C809 C815 C818 C819 C835 C836 C837 C841 C844 C847 C900 C901 C902 C905 C906 C908 C909 C910 C916 C917 C922 C927	CAP. CERAMIC CHIP 100nF	GRM36Y5V 104Z 16PN GRP155F51C104ZA01E
C848 C814	CAP. CERAMIC CHIP 220nF	GRM36Y5V 224Z 16PN GRP155F51A224ZD02E
C812 C821	CAP. CERAMIC CHIP 470nF	GRM36Y5V 474Z 16PN GRP155F51A474ZD02E
C515 C516 C703 C704 C842 C849 C850 C907 C918 C919	CAP. CERAMIC CHIP 1uF (1608)	GRM39Y5V 105Z 10PT GRM188F51A105ZC01D
C107	CAP. CERAMIC CHIP 4.7uF (1608)	GRM188R60J475KE19D

REF NO.	DESCRIPTION	PART NUMBER
R102 R105 R205 R206 R209 R214 R516 R523 R524 R526 R527 R528 R529 R530 R533 R534 R630 R631 R632 R633 R634 R635 R636 R701 R703 R709 R710 R711 R712 R716 R717 R721 R723 R724 R832 R901 R906 R913 R914 R917 R922 R939 R943 R955 R956	RES. CHIP 0 ohm +-5%(J) 1/16W 1005(0402)	MCR01MZSJ000 MCR01MZPJ000
R713	RES. CHIP 0.2 ohm +-1%	RLC20R20FTP
R303 R304 R308 R309 R310 R834 R835	RES. CHIP 10 ohm +-5%(J) 1/16W 1005(0402)	MCR01MZSJ100 MCR01MZPJ100
R831	RES. CHIP 15 ohm +-5%(J) 1/16W 1005(0402)	MCR01MZSJ150 MCR01MZPJ150
R808 R812	RES. CHIP 33 ohm +-5%(J) 1/16W 1005(0402)	MCR01MZSJ330 MCR01MZPJ330
R201	RES. CHIP 220 ohm +-1%(F) 1/16W 1005(0402)	MCR01MZSF2200 MCR01MZPF2200
R609	RES. CHIP 330 ohm +-5%(J) 1/16W 1005(0402)	MCR01MZSJ331 MCR01MZPJ331
R204	RES. CHIP 470 ohm +-5%(J) 1/16W 1005(0402)	MCR01MZSJ471 MCR01MZPJ471
R305 R822 R851 R905	RES. CHIP 1 Kohm +-5%(J) 1/16W 1005(0402)	MCR01MZSJ102 MCR01MZPJ102
R502 R503 R622 R623 R814 R908 R909	RES. CHIP 1.5 Kohm +-5%(J) 1/16W 1005(0402)	MCR01MZSJ152 MCR01MZPJ152

REF NO.	DESCRIPTION	PART NUMBER
R807 R816	RES. CHIP 1.8 Kohm +-5%(J) 1/16W 1005(0402)	MCR01MZSJ182 MCR01MZPJ182
R825 R830	RES. CHIP 2.2 Kohm +-5%(J) 1/16W 1005(0402)	MCR01MZSJ222 MCR01MZPJ222
R911	RES. CHIP 3.6 Kohm +-5%(J) 1/16W 1005(0403)	MCR01MZSJ362 MCR01MZPJ362
R949 R951	RES. CHIP 3.9 Kohm +-5%(J) 1/16W 1005(0403)	MCR01MZSJ392 MCR01MZPJ392
R509	RES. CHIP 5.1 Kohm +-5%(J) 1/16W 1005(0402)	MCR01MZSJ512 MCR01MZPJ512
R301	RES. CHIP 7.5 Kohm +-5%(J) 1/16W 1005(0402)	MCR01MZSJ752 MCR01MZPJ752
R109 R110 R300 R400 R402 R403 R404 R405 R406 R506 R511 R517 R532 R535 R602 R603 R604 R605 R606 R607 R608 R610 R611 R612 R613 R614 R615 R618 R829 R903 R910 R915 R916 R921	RES. CHIP 10 Kohm +-5%(J) 1/16W 1005(0402)	MCRO1MZSJ103 MCR01MZPJ103
R108	RES. CHIP 11 Kohm +-5%(J) 1/16W 1005(0402)	MCRO1MZSJ113 MCR01MZPJ113
R801 R802 R803 R804	RES. CHIP 20 Kohm +-5%(J) 1/16W 1005(0402)	MCRO1MZSJ203 MCR01MZPJ203
R505	RES. CHIP 100 Kohm +-1%(F) 1/16W 1005(0402)	MCR01MZSF1003 MCR01MZPF1003

REF NO.	DESCRIPTION	PART NUMBER
R213 R501 R504 R507 R508 R510 R708 R809 R811 R818 R823 R824 R827 R950 R952	RES. CHIP 100 Kohm +-5%(J) 1/16W 1005(0402)	MCR01MZSJ104 MCR01MZPJ104
R828	RES. CHIP 120 Kohm +-5%(J) 1/16W 1005(0402)	MCR01MZSJ124 MCR01MZPJ124
R707	RES. CHIP 150 Kohm +-5%(J) 1/16W 1005(0402)	MCR01MZSJ154 MCR01MZPJ154
R817 R826	RES. CHIP 180 Kohm +-5%(J) 1/16W 1005(0402)	MCR01MZSJ184 MCR01MZPJ184
R500	RES. CHIP 220 Kohm +-5%(J) 1/16W 1005(0402)	MCR01MZSJ224 MCR01MZPJ224
R806	RES. CHIP 510 Kohm +-5%(J) 1/16W 1005(0402)	MCR01MZSJ514 MCR01MZPJ514
R815	RES. CHIP 1 Mohm +-5%(J) 1/16W 1005(0402)	MCRO1MZSJ105
R714 R715	RES. CHIP 10 ohm,+-5%(J) 1/10W 1608	MCR03EZPJ100 MCR03EZHJ100
R302	4-RESISTOR ARRAY (10 Kohm +-5%)	MNR04M0ABJ103
U805	ANALOG SWITCH	N.C
C106 C216 C218 C930	CAP. CERAMIC CHIP	N.C
R103 R106 R306 R307 R833	RESISTOR, DNI	N.C
R207 R208 R210 R211 R401 R616 R920 R944	RES. CHIP	N.C
L104 L106 L108 L902	INDUCTOR	N.C
V303 V304 V305 V306 V314 V315 V316 V317 V318 V319	VARISTOR	N.C

REF NO.	DESCRIPTION	PART NUMBER
	MAIN PCB	ANASTA
	MIC	OBG-415P46-C1033
	VIBRATOR	LA4-458AB
	BACKUP BAT	ML414S
	Antenna (Intenna)	
	KEY FPCB	HT16-24
	CAMERA MODULE	SY301
	LCD MODULE	
	LCD TAIL FPCB	
	RECEIVER 700Hz Ø15	U1508S47C-1
	SPEAKER 850Hz Ø15	U1508S47C-4
	BATTERY	
	TRAVEL ADAPTER	
	EAR MIC	
	USB CABLE	USB-12A12BS1-0
	Mini SD CARD (32MB)	

9.2 Electrical Parts List (Circuit) - Key

REF NO.	DESCRIPTION	PART NUMBER
U102 U901	HALL SWITCH	A3212EEHLT
D911	Bi-Color LED	BRPG1211C
D901 D902 D903 D905 D906 D907 D908 D910 D912 D913	KEY LED	BZ-HB336G-TRB
V115	VARISTOR 1005 size	AVLC5S02050
V106 V107 V108 V109	VARISTOR 1005 size	AVLC5S02100
C918	CAP. CERAMIC CHIP 9pF	GRM36C0G 090D 50PN GRP1555C1H9R0DZ01E
C919	CAP. CERAMIC CHIP 15pF	GRM36C0G 150J 50PN GRP1555C1H150JZ01E
C102 C901	CAP. CERAMIC CHIP 100nF	GRM36Y5V 104Z 16PN GRP155F51C104ZA01E
R931	RES. CHIP 18 ohm	MCR01MZSJ180 MCR01MZPJ180
R926 R928 R929	RES. CHIP 39 ohm	MCR01MZSJ390 MCR01MZPJ390
R930	RES. CHIP 330 ohm	MCR01MZSJ331 MCR01MZPJ331
R102 R901	RES. CHIP 47 Kohm	MCR01MZSJ473 MCR01MZPJ473
D904 D909 D914	KEY LED	NC
	KEY FPCB	HT16-24

9.3 Mechanical Part List

CODE NO.	DESCRIPTION	SPECIFICATION
BH900005001	**TOTAL ASS'Y**	
BH800038101	**CASE FOLDER ASSY**	
BH850025701	**SUB FOLDER UPPER**	
BH720038801	FOLDER UPPER	P.C
BH750032201	TAPE WINDOW SUB	3M 9448HK T0.165
BH750032301	TAPE UPPER BADGE	VENTURE 4296 T0.1
BH740027901	CUSHION FPCB	EPDM T1.0
BH740028001	CUSHION SUB LCD	PORON T0.5
BH850025801	**SUB FOLDER LOWER**	
BH720038901	FOLDER LOWER	IXEF
BH750032401	TAPE WINDOW MAIN	VENTURE 1163 T0.16
BH750032501	TAPE DECO SPEAKER	3M 9448HK T0.165
BH750032601	TAPE BADGE	3M 9495LE T0.18
BH740028101	CUSHION LCD MAIN	SCF T1.0
BH720039001	SIDE DECO FOLDER	P.C
BH710019201	MAGNET	1X3.6X6
BH720039101	WINDOW MAIN	ACRYL FILTER T1.5
BH740028201	SHIELD FOAM LCD	6X2.5 X T3.0
BH710019301	INNET	NI T0.07
BH710018601	BADGE	BADGE
BH720040302	UPPER BADGE	ABS + CR
BS61111440B	FOLDER SCREW	M1.4X4.0 P0.3 (+), BLACK
BH730015901	RUBBER SCREW FOLDER	SILICON RUBBER

CODE NO.	DESCRIPTION	SPECIFICATION
BH720039201	WINDOW SUB	ACRYL FILTER T1.2
BH710019402	COVER FPCB	Zn DIECASTING
	FPCB	
BH850026302	**SUB SPEAKER DECO**	
BH720039302	DECO SPEAKER	P.C
	TAPE DECO SPEAKER	3M 9448HK T0.165
BH850026401	**SUB DECO**	
BH710019501	DECO SUB	CU + CR
BH750033601	TAPE SUB DECO	VENTURE 1163 T0.16
BH850026801	**HINGE ASS'Y**	
BH720040401	ROTATE HINGE	P.C + ZN
BH710019601	HINGE	
BH800038201	**ASS'Y MAIN**	
BH850025901	**SUB FRONT CASE**	
BH720039401	CASE FRONT	P.C
BH720039502	DECO FRONT	P.C
BH720039601	INDICATOR	확산 ACTYL
BH730016002	RUBBER STOPPER	URETHANE RUBBER
BH730016102	RUBBER DAMPER	URETHANE RUBBER
BH750032801	TAPE DECO FRONT	DIC 8810SA T0.2
BH850026501	**SUB SIDE DECO MAIN**	
BH720039701	SIDE DECO MAIN	P.C
BH730016201	COVER I/O	P.C+URETHANE RUBBER
BH730016301	COVER EARJACK	P.C+URETHANE RUBBER
BH730016701	COVER SDCARD	P.C+URETHANE RUBBER

CODE NO.	DESCRIPTION	SPECIFICATION
BH850026701	**SUB COVER BATTERY**	
BH720039801	COVER BATTERY	P.C
BH750033501	TAPE RUBBER HOLDER	SILICON TAPE(t=0.1)+VENTURE #4296(t=0.1)
BH730016801	RUBBER HOLDER	SILICON
BH850026601	**SUB BRACKET FLASH**	
BH720040501	BRACKET FLASH	P.C
BH750032901	TAPE FLASH	3M 9448HK T0.165
BH850026001	**SUB REAR CASE**	
BH720039901	CASE REAR	P.C
BH720040602	DECO REAR	P.C
BH720040701	COVER REAR	P.C
BH720040801	COVER LENS	P.C
BH750033401	TAPE DECO REAR	3M 9448HK T0.165
BH750033001	TAPE DECO CAMERA	3M 9448HK T0.165
BH750033101	TAPE WINDOW CAMERA	NITTO 5103 T0.1
BH740028501	SHIELD FOAM FPCB	W290CNG 6X7.4X0.5
BH740030401	COUNDUCTIVE TAPE REAR	STN1029WGP 19.6X7.6
BH740030301	COUNDUCTIVE TAPE FPCB	STN1029WGP
BH740030701	CUSHION FPCB	PORON T0.3
BH720040001	SIDE KEY	ABS+RUBBER+CR PLATING
BH720040101	CAMERA-MP3 KEY	ABS+RUBBER+CR PLATING
BD110009001	KEY FPCB ASS'Y	
BH710019001	BRACKET	Zn DIECASTING
BH720040201	WINDOW CAMERA	ACRYL FILTER T0.8

CODE NO.	DESCRIPTION	SPECIFICATION
BH710019101	DECO CAMERA	Cu
BH730014301	RUBBER MIC	SILICON
BH730016901	RUBBER FLASH	SILICON
BH730016402	RUBBER RF	SILICON
BH730016501	RUBBER SCREW MAIN	URETHANE RUBBER
BH730016601	RUBBER CAMERA	SILICON
BH730017002	KEY PAD	MOLD+URETHANE FILM
BH750033201	TAPE CAMERA	NITTO 5103 T0.1
BS61121640B	SCREW MAIN	M1.6X4.0 P0.35 T6 BLACK
BH750033801	TAPE HOLE SWITCH R	3M 5 T0.05
BH740030501	TUBE LIGHT PROTECTION IN	
BH740030601	TUBE LIGHT PROTECTION OUT	
BH750033701	TAPE MIC	3M 56 T0.05
BD080003801	INTENNA	