GSM TELEPHONE

GT-i9000B

SERVICE Manual

GSM TELEPHONE

CONTENTS

Notice

All functionality, features, specifications and other product information provided in this document including, but not limited to, the benefits, design, pricing, components, performance, availability, and capabiliti-es of the product are subject to change without notice or obligation. Samsung reserves the right to make changes to this document and the product described herein, at anytime, without obligation on Samsung to provide notification of such change.

SAMSUNG
ELECTRONICS

GSPN (Global Service Partner Network)

Country	Web Site
North America	service.samsungportal.com
Latin America	latin.samsungportal.com
CIS	cis.samsungportal.com
Europe	europe.samsungportal.com
China	china.samsungportal.com
Asia	asia.samsungportal.com
Mideast & Africa	mea.samsungportal.com

2010. 07. Rev.1.0

1. Safety Precautions

1-1. Repair Precaution

- Repair in Shield Box, during detailed tuning.
  Take specially care of tuning or test, because the specification of cellular phone is sensitive for surrounding interference(RF noise).

- Be careful to use a kind of magnetic object or tool, because performance of parts is damaged by the influence of magnetic force.

- Surely use a standard screwdriver when you disassemble this product, otherwise screw will be worn away.

- Use a thicken twisted wire when you measure level.
  A thicken twisted wire has low resistance, therefore error of measurement is few.

- Repair after separate Test Pack and Set because for short danger (for example an overcurrent and furious flames of parts etc) when you repair board in condition of connecting Test Pack and tuning on.

- Take specially care of soldering, because Land of PCB is small and weak in heat.

- Surely tune on/off while using AC power plug, because a repair of battery charger is dangerous when tuning ON/OFF PBA and Connector after disassembling charger.

- Don't use as you pleases after change other material than replacement registered on SEC System. Otherwise engineer in charge isn't charged with problem that you don't keep this rules.

1-2. ESD(Electrostatically Sensitive Devices) Precaution

Several semiconductor may be damaged easily by static electricity. Such parts are called by ESD (Electrostatically Sensitive Devices), for example IC,BGA chip etc. Read Precaution below.
You can prevent from ESD damage by static electricity.

- Remove static electricity remained your body before you touch semiconductor or parts with semiconductor. There are ways that you touch an earthed place or wear static electricity prevention string on wrist.

- Use earthed soldering steel when you connect or disconnect ESD.

- Use soldering removing tool to break static electricity. Otherwise ESD will be damaged by static electricity.

- Don't unpack until you set up ESD on product. Because most of ESD are packed by box and aluminum plate to have conductive power,they are prevented from static electricity.

- You must maintain electric contact between ESD and place due to be set up until ESD is connected completely to the proper place or a circuit board.

2. Specification

2-1. GSM General Specification

	GSM850	EGSM 900	DCS1800	PCS1900	WCDMA2100	WCDMA850
Freq. Band[MHz] Uplink/Downlink	824~849 869~894	880~915 925~960	1710~1785 1805~1880	1850~1910 1930~1990	1922~1977 2112~2167	824~849 869~894
ARFCN range	128~251	0~124 & 975~1023	512~885	512~810	UL:9612~9888 DL:10562~10838	UL:4132~4233 ,782,787,807 ,812,837,862 DL:4357~4458 ,1007,1012,1032 ,1037,1062,1087
Tx/Rx spacing	45MHz	45MHz	95MHz	80MHz	190MHz	45MHz
Mod. Bit rate/ Bit Period	270.833kbps 3.692us	270.833kbps 3.692us	270.833kbps 3.692us	270.833kbps 3.692us	3.84Mcps	3.84Mcps
Time Slot Period/Frame Period	576.9us 4.615ms	576.9us 4.615ms	576.9us 4.615ms	576.9us 4.615ms	FrameLength: 10ms Slotlength: 0.667ms	FrameLength: 10ms Slotlength: 0.667ms
Modulation	0.3GMSK	0.3GMSK	0.3GMSK	0.3GMSK	QPSKHQPSK	QPSKHQPSK
MS Power	33dBm~5dBm	33dBm~5dBm	30dBm~0dBm	30dBm~0dBm	24dBm~-50dBm	24dBm~-50dBm
Power Class	5pcl ~ 19pcl	5pcl ~ 19pcl	0pcl ~ 15pcl	0pcl ~ 15pcl	3(max+24dBm)	3(max+24dBm)
Sensitivity	-102dBm	-102dBm	-100dBm	-100dBm	-106.7dBm	-106.7dBm
TDMA Mux	8	8	8	8	8	8
Cell Radius	35Km	35Km	2Km	2Km	2Km	2Km

2-2. GSM Tx Power Class

TX Power control level	GSM850
5	33±2 dBm
6	31±2 dBm
7	29±2 dBm
8	27±2 dBm
9	25±2 dBm
10	23±2 dBm
11	21±2 dBm
12	19±2 dBm
13	17±2 dBm
14	15±2 dBm
15	13±2 dBm
16	11±3 dBm
17	9±3dBm
18	7±3 dBm
19	5±3 dBm

TX Power control level	EGSM900
5	33±2 dBm
6	31±2 dBm
7	29±2 dBm
8	27±2 dBm
9	25±2 dBm
10	23±2 dBm
11	21±2 dBm
12	19±2 dBm
13	17±2 dBm
14	15±2 dBm
15	13±2 dBm
16	11±3 dBm
17	9±3dBm
18	7±3 dBm
19	5±3 dBm

TX Power control level	DCS1800
0	30±3 dBm
1	28±3 dBm
2	26±3 dBm
3	24±3 dBm
4	22±3 dBm
5	20±3 dBm
6	18±3 dBm
7	16±3 dBm
8	14±3 dBm
9	12±4 dBm
10	10±4 dBm
11	8±4 dBm
12	6±4 dBm
13	4±4 dBm
14	2±5 dBm
15	0±5 dBm

TX Power control level	PCS1900
0	30±3 dBm
1	28±3 dBm
2	26±3 dBm
3	24±3 dBm
4	22±3 dBm
5	20±3 dBm
6	18±3 dBm
7	16±3 dBm
8	14±3 dBm
9	12±4 dBm
10	10±4 dBm
11	8±4 dBm
12	6±4 dBm
13	4±4 dBm
14	2±5 dBm
15	0±5 dBm

3. Operation Instruction and Installation

Main Function

- Android OS: Eclair
- HSDPA 7.2Mbps / HSUPA 5.76Mbps
- 5MP AF w/o LED Flash
- 4.0" WVGA Super AMOLED Full Touch (C-Type)
- A-GPS / BT v3.0 / USB v2.0 / WiFi (802.11 b/g/n)
- HD Recording (720p) / Full HD Playback (1080p), DLNA
- Sensors: Accelerometer, Compass, Proximity, Light
- TouchWiz 3.0 for Android, Multistage, Augmented Reality, Integrated phonebook with SNS, IM, E-mail, Face Recognition, etc.

4. Exploded View and Parts List

4-1. Cellular phone Exploded View

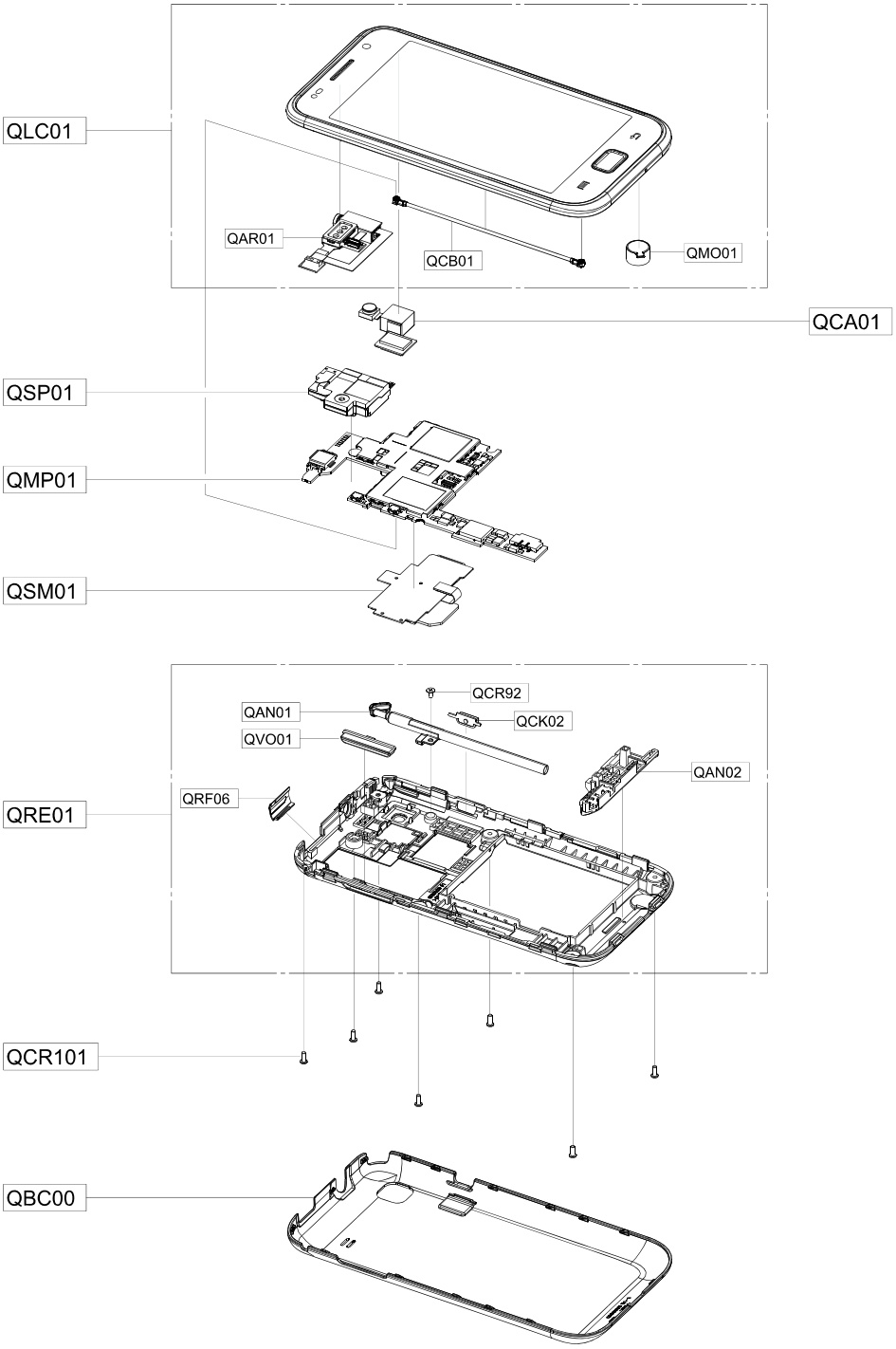

4-2. Cellular phone Parts list

Design LOC		Discription	SEC CODE
QCR101		SCREW-MACHINE	6001-002005
QCA01		CAMERA MODULE-5M A/F CMOS CAMERA MODULE	GH59-09400A
QSP01		MODULE-SPEAKER	GH59-09636A
QSM01		ASSY ETC-SIM/T-FLASH ASSY(GT-I9000B)	GH59-09704A
QMP01		A/S ASSY-PBA MAIN_GT-I9000B,BRAZ (SVC)	GH82-04996A
QBC00		ASSY COVER-BATTERY(GOOGLE)	GH98-17485A
QLC01		MEA FRONT-GTI9000B	GH97-11299A
	QCB01	CBF COAXIAL CABLE-GT-I9000 ANT CABLE_(78	GH39-01418A
	QAR01	MODULE-RCV+SENSOR FPCB(I9000B);GT-I9000B	GH59-09920A
	QMO01	MOTOR LINEAR VIBRATION-GTS8000	GH31-00475A
QRE01		ASSY CASE-REAR	GH98-17086A
	QCR92	SCREW-MACHINE	6001-002261
	QAN02	INTENNA-GT-I9000B	GH42-02575A
	QAN01	ANTENNA-GT-I9000B_SBTVDT	GH42-02586A
	QRF06	PMO COVER-USB V3	GH72-59633A
	QVO01	ASSY KEY-VOLUME	GH98-17428A
	QCK02	PMO KEY-POWER	GH72-60316A

5. MAIN Electrical Parts List

Design LOC	SEC CODE	Description
ANT101	GH62-00016A	NPR CONTACT-ANTENNA
ANT102	3705-001448	CONNECTOR-COAXIAL
ANT103,ANT106,ANT701	GH71-08731A	NPR CONTACT-ANTENNA
BAT501	4302-001180	BATTERY-LI(2ND)
BTC501	3711-006299	HEADER-BATTERY
C101,C176	2203-005725	C-CER,CHIP
C102,C202,C205,C209	2203-007210	C-CER,CHIP
C103,C104,C105,C106C107,C108,C110,C111	2203-006194	C-CER,CHIP
C109,C165,C717,C718	2203-006399	C-CER,CHIP
C112,C130,C134,C182	2203-006194	C-CER,CHIP
C113,C140,C154,C501	2203-005736	C-CER,CHIP
C114	2203-006123	C-CER,CHIP
C115,C276	2203-000812	C-CER,CHIP
C118,L105	2703-002793	C-CER,CHIP
C119,C120,C127,C131	2203-005732	C-CER,CHIP
C121,C223,C224,C236	2203-005731	C-CER,CHIP
C123,C129,C166,C204	2203-006423	C-CER,CHIP
C124	2203-005727	C-CER,CHIP
C126,C142,C145,C157	2203-005726	C-CER,CHIP
C128	2203-005552	C-CER,CHIP
C132,C288	2203-005729	C-CER,CHIP
C133,C171,C242,C244	2203-006562	C-CER,CHIP
C135,C173,C174,C193	2203-006208	C-CER,CHIP
C136,C150	2203-000233	C-CER,CHIP
C139	2203-007133	C-CER,CHIP
C141	2203-007194	C-CER,CHIP
C143,C147,C152	2203-006674	C-CER,CHIP
C146	2203-005739	C-CER,CHIP
C149,C421	2203-006305	C-CER,CHIP
C151	2703-002649	C-CER,CHIP
C153	2203-005683	C-CER,CHIP
C155,C160,C161,C175	2203-006872	C-CER,CHIP
C158	2203-006620	C-CER,CHIP
C159,C715	2203-006979	C-CER,CHIP
C162,C246,C544	2203-006048	C-CER,CHIP
C163,C230,C231,C554	2203-006890	C-CER,CHIP
C164,C424,C427	2203-006642	C-CER,CHIP
C167,C541	2203-006648	C-CER,CHIP
C168,C172,C504	2203-006824	C-CER,CHIP
C170	2203-005446	C-CER,CHIP
C177,C192	2203-006120	C-CER,CHIP
C183,C704	2203-001259	C-CER,CHIP

Design LOC	SEC CODE	Description
C185	2203-006611	C-CER,CHIP
C186,C556	2203-002709	C-CER,CHIP
C187,C189,C190,C206	2203-006194	C-CER,CHIP
C188	2203-006693	C-CER,CHIP
C194	2203-000438	C-CER,CHIP
C195,C198	2203-005234	C-CER,CHIP
C196,C254,C255,C256	2203-006872	C-CER,CHIP
C197	2203-005050	C-CER,CHIP
C201,C203,C207,C208	2203-007369	C-CER,CHIP
C211,C214,C216,C241	2203-006423	C-CER,CHIP
C220,C226,C227,C229	2203-007369	C-CER,CHIP
C225,C233	2203-006474	C-CER,CHIP
C228,C232,C249	2203-007210	C-CER,CHIP
C234,C235,C243,C247	2203-007317	C-CER,CHIP
C239,C517,C539	2203-005731	C-CER,CHIP
C245,C308	2203-007393	C-CER,CHIP
C250,C251,C279,C281	2203-006562	C-CER,CHIP
C257,C258,C287,C403	2203-007317	C-CER,CHIP
C259,C260,C261,C262	2203-006423	C-CER,CHIP
C264,C278,C285,C286	2203-007369	C-CER,CHIP
C265,TA300	2404-001496	C-CER,CHIP
C267	2404-001561	C-CER,CHIP
C269	2404-001572	C-CER,CHIP
C275	2203-000278	C-CER,CHIP
C277	2203-000995	C-CER,CHIP
C282,C283,C351,C352	2203-006562	C-CER,CHIP
C301	2203-005732	C-CER,CHIP
C302,C310,C336,C337	2203-006423	C-CER,CHIP
C304,C407,C413,C429	2203-007271	C-CER,CHIP
C305,C306,C307,C338	2203-006838	C-CER,CHIP
C317,C332,C333,C401	2203-007369	C-CER,CHIP
C331	2203-006681	C-CER,CHIP
C339,C340,C524,C525	2203-006838	C-CER,CHIP
C344,C348,C402,C408	2203-006423	C-CER,CHIP
C349	2203-001153	C-CER,CHIP
C350	2203-000386	C-CER,CHIP
C400,C420,C514,C538	2203-006839	C-CER,CHIP
C404,C412	2203-007317	C-CER,CHIP
C405,C422,C425,C428	2203-007369	C-CER,CHIP
C410,C411,C414,C416	2203-006423	C-CER,CHIP
C415	2203-006668	C-CER,CHIP
C417,C418	2203-006133	C-CER,CHIP

Design LOC	SEC CODE	Description
C419,C542	2203-006423	C-CER,CHIP
C430,C503,C512,C522	2203-007369	C-CER,CHIP
C502	2203-006348	C-CER,CHIP
C505,C506,C507,C508,C509,C510,C511	2404-001339	C-CER,CHIP
C515,C516,C528,C533	2203-006562	C-CER,CHIP
C518	2203-006825	C-CER,CHIP
C519,C520,C521	2203-006208	C-CER,CHIP
C523,C526,C527,C530	2203-007369	C-CER,CHIP
C529,C531,C534,C535	2203-006838	C-CER,CHIP
C532,C536,C551,C557	2203-007369	C-CER,CHIP
C537	2203-006838	C-CER,CHIP
C547,C549,C550	2203-006841	C-CER,CHIP
C548	2203-000725	C-CER,CHIP
C553,C701,C702,C703	2203-006562	C-CER,CHIP
C601,C602,C603,C607	2203-007369	C-CER,CHIP
C705	2203-005450	C-CER,CHIP
C706,C710,C711,C716	2203-006839	C-CER,CHIP
C707,C713,C720,L701	2203-007369	C-CER,CHIP
C708,C709,C712	2203-006872	C-CER,CHIP
C714	2203-005806	C-CER,CHIP
C719	2203-006399	C-CER,CHIP
C721	2203-006839	C-CER,CHIP
C722,C723	2203-006439	C-CER,CHIP
D501	0407-001002	DIODE-TVS
F100	2904-001939	FILTER-SAW
F101	2904-001759	FILTER-SAW
F300,F301,F302,F303,F304,F305,F309	2901-001576	FILTER-EMI SMD
F306,F307,F308	2901-001604	FILTER-EMI SMD
F701	2904-001840	FILTER-SAW
HDC300	3711-006483	HEADER-BOARD TO BOARD
HDC301	3711-006865	HEADER-BOARD TO BOARD
HDC302,HEA601	3711-006650	HEADER-BOARD TO BOARD
HDC401	3711-007173	HEADER-BOARD TO BOARD
HEA301	3711-006923	HEADER-BOARD TO BOARD
IFC300	3722-002867	JACK-MICRO USB
L101,L102	2703-002918	INDUCTOR-SMD
L103	2703-002314	INDUCTOR-SMD
L104,L300	3301-001729	INDUCTOR-SMD
L106	2703-002953	INDUCTOR-SMD
L109	2703-002903	INDUCTOR-SMD
L111	2703-002858	INDUCTOR-SMD
L112	2703-002815	INDUCTOR-SMD

Design LOC	SEC CODE	Description
L113,L207,L208	2703-003698	INDUCTOR-SMD
L120	2703-002906	INDUCTOR-SMD
L121	2703-002775	INDUCTOR-SMD
L123	3301-001659	INDUCTOR-SMD
L205,L206	3301-001956	INDUCTOR-SMD
L209,L210	3301-001789	INDUCTOR-SMD
L301,L302,L303,L304	3301-001885	INDUCTOR-SMD
L305	2703-001259	INDUCTOR-SMD
L306,L311	3301-001885	INDUCTOR-SMD
L307,L308	2703-002842	INDUCTOR-SMD
L309,L601	3301-001912	INDUCTOR-SMD
L310,L713	2703-002961	INDUCTOR-SMD
L312,L314	3301-001971	BEAD-SMD
L313,L710,L714	3301-001534	BEAD-SMD
L501	2703-003182	INDUCTOR-SMD
L502,L503	2703-003343	INDUCTOR-SMD
L504	2703-003686	INDUCTOR-SMD
L505,L506	2703-002309	INDUCTOR-SMD
L702	2703-002596	INDUCTOR-SMD
L703	2703-002612	INDUCTOR-SMD
L704,L708	2703-001786	INDUCTOR-SMD
L705	2703-002608	INDUCTOR-SMD
L706	2703-002636	INDUCTOR-SMD
L707	2703-002198	INDUCTOR-SMD
L709	2703-002269	INDUCTOR-SMD
L711	2703-001180	INDUCTOR-SMD
L712	2203-007369	INDUCTOR-SMD
L715,L716	2703-002958	INDUCTOR-SMD
OSC100	2809-001358	OSCILLATOR-VCTCXO
OSC101	2809-001348	OSCILLATOR-VCTCXO
OSC102	2804-001884	OSCILLATOR
OSC200,OSC501	2801-004902	CRYSTAL-SMD
OSC400	2801-004458	CRYSTAL-SMD
OSC701	2801-004560	CRYSTAL-SMD
PAM101	1201-003034	IC-POWER AMP
PAM102	1201-003099	IC-POWER AMP
PAM103	1201-003032	IC-POWER AMP
PAM104	1201-002801	IC-POWER AMP
Q300	0504-001138	TR-DIGITAL
R100,R113,R414,R415	2007-008419	R-CHIP
R101,R102,R117,R275	2007-009801	R-CHIP
R118,R601,R603	2007-008806	R-CHIP

Design LOC	SEC CODE	Description
R119,R235,R239,R342	2007-008055	R-CHIP
R121,R122,R123,R124,R125,R266,R286,R287	2007-008516	R-CHIP
R127	2007-000155	R-CHIP
R211,R212,R216,R233	2007-008045	R-CHIP
R214,R288	2007-000167	R-CHIP
R215,R280,R475,R476	2007-009157	R-CHIP
R217,R345	2007-009084	R-CHIP
R218	2007-007573	R-CHIP
R222,R223,R224	2007-008588	R-CHIP
R229	2007-003018	R-CHIP
R234,R240,R301,R335	2007-008045	R-CHIP
R237,R238	2007-008211	R-CHIP
R245	2007-009323	R-CHIP
R248	2007-008587	R-CHIP
R249	2007-000242	R-CHIP
R278,R279,R343,R344	2007-008531	R-CHIP
R283	2007-008483	R-CHIP
R302,R346,R417,R418	2007-008516	R-CHIP
R303,R304,R309,R353	2007-008774	R-CHIP
R305	2007-007943	R-CHIP
R308	2007-008015	R-CHIP
R326,R328,R329,R330,R331,R340	2007-009171	R-CHIP
R347,R420,R532,R604	2007-008045	R-CHIP
R350	2007-010202	R-CHIP
R354,R355,R356,R357	2007-008774	R-CHIP
R358,R360,R503	2007-008774	R-CHIP
R359,R404,R439,R703	2007-008052	R-CHIP
R411	2007-010029	R-CHIP
R412	2007-008548	R-CHIP
R419,R423,R428,R432	2007-008516	R-CHIP
R431,R434,R435,R437	2007-008055	R-CHIP
R438,R457,R505,R506	2007-008055	R-CHIP
R440,R441,R461,R466	2007-008516	R-CHIP
R447,R448,R449,R450	2007-008419	R-CHIP
R451,R455	2007-009964	R-CHIP
R462,R463,R467,R468	2007-008419	R-CHIP
R465	2007-008531	R-CHIP
R473	2203-005138	R-CHIP
R477,R502,R509,R622	2007-008516	R-CHIP
R479,R480,R481,R482	2007-008419	R-CHIP
R483,R484,R485,R486	2007-008419	R-CHIP
R501	2007-008809	R-CHIP

Design LOC	SEC CODE	Description
R507,R511,R709	2007-008055	R-CHIP
R518,R520	2007-007307	R-CHIP
R521	2007-008502	R-CHIP
R521	2007-008502	R-CHIP
R560	2007-007592	R-CHIP
R701,R702,R711	2007-008419	R-CHIP
R704	2007-008052	R-CHIP
R705	2007-000172	R-CHIP
R706	2007-007318	R-CHIP
R707,R708	2007-008045	R-CHIP
R710	2007-009793	R-CHIP
RFS100	3705-001503	CONNECTOR-COAXIAL
SC601,SC602,SC603,SC604,SC605,SC606 , SC607,SC608, SC610,SC611,SC612	GH70-04443A	IPR SHIELD-CAN CLIP
SC613,SC615,SC616,SC617,SC618,SC619,SC620,SC621, SC622,SC623,SC624	GH70-03951A	IPR SHIELD-CAN CLIP
SC614,SC625	GH70-04828A	IPR SHIELD-CAN CLIP
TA501	2404-001506	C-TA,CHIP
TH201,TH401	1404-001221	THERMISTOR
U100	1201-002999	IC-RF AMP
U101	1205-003949	IC-TRANSCEIVER
U102	1203-006199	IC-DC/DC CONVERTER
U104	1204-003026	IC-TUNER
U105	4709-001844	IC-W-LAN MODULE
U106	1205-003966	IC-RECEIVER
U203,U206	1003-002352	IC-LEVEL DRIVER
U207	1205-003943	IC-CODEC
U209	0801-003227	IC-CMOS LOGIC
U210,U303	1203-004819	IC-POSI.FIXED REG.
U300	1203-004339	IC-MULTI REG.
U301	1001-001580	IC-ANALOG MULTIPLEX
U302	1001-001488	IC-ANALOG SWITCH
U307	1203-005521	IC-POSI.FIXED REG.
U308	0406-001369	DIODE-TVS
U503	1203-006186	IC-POWER SUPERVISOR
U505	1209-001817	IC-SENSOR
U506	1209-001877	IC-SENSOR
U507	1203-004925	IC-POSI.FIXED REG.
U508	1003-002047	IC-MOTOR DRIVER
U509	1203-005772	IC-VOLTAGE DETECTOR
U510	2007-007592	R-CHIP
U514	1203-006372	IC-RESET

Design LOC	SEC CODE	Description
U515,U602	1203-005854	IC-MULTI REG.
U601	0801-003022	IC-CMOS LOGIC
U606	1202-001036	IC-VOLTAGE COMP.
U607	0801-003139	IC-CMOS LOGIC
UCP200	1205-003993	IC-MODEM
UCP400	0902-002582	IC-MICROPROCESSOR
UME301	1107-001876	IC-FLASH MEMORY
V304,V305,V316,ZD300	1405-001200	VARISTOR
V306,V307,V308,V309,V310,V311,V312,V313,V314,V315,ZD601	1405-001177	VARISTOR
VOL_DOWN,VOL_UP	3404-001406	SWITCH-TACT
ZD301,ZD303,ZD304, ZD306	0406-001413	DIODE-TVS
ZD302	0403-001688	DIODE-TVS
ZD307,ZD308	0406-001231	DIODE-TVS
ZD502	0406-001322	DIODE-TVS
ZD701	0406-001267	DIODE-TVS

Please consult the GSPN website (Samsung Portal) for the most recent version of the product's part list.

6. Level 1 Repair

6-1. S/W Download

6-1-1. Pre-requsite for S/W Downloading

- Downloader Program(**Odin3 v1.0.exe**)
- GT-I9000 Mobile Phone
- Data Cable
- Binary files

Anyway Jig	Adaptor	IF Cable	RF Cable
			
GH99-36900A	GH99-38251A	GH39-01290A	GH39-00985A

※ Settings

6-1-2. S/W Downloader Program

■ Load the binary download program by executing the

" Odin3 v1.0.exe " ← **Run this file.**

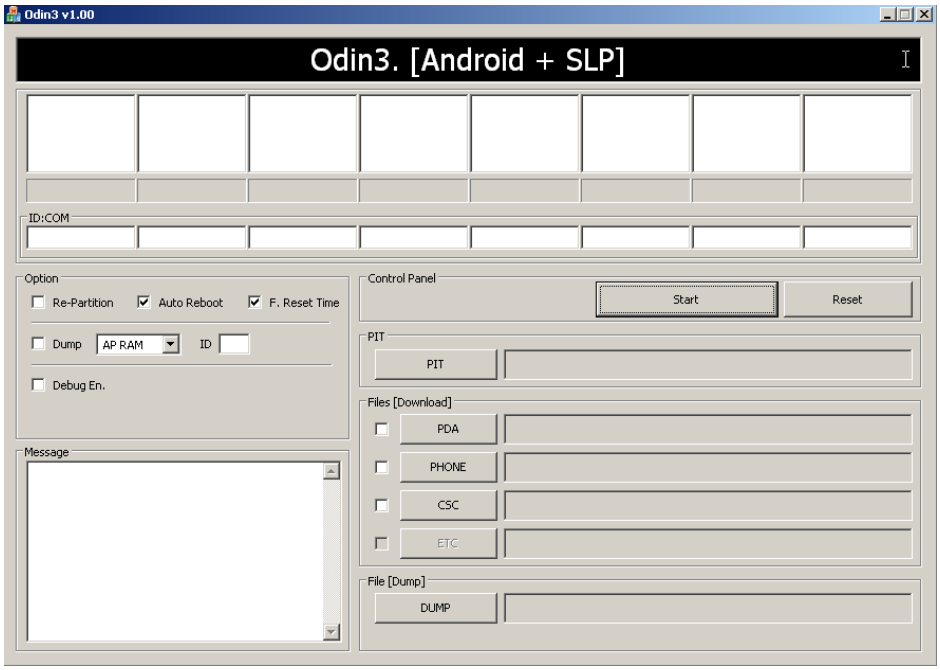

1. Option Selection

- Check Auto Reboot and F. Reset Time

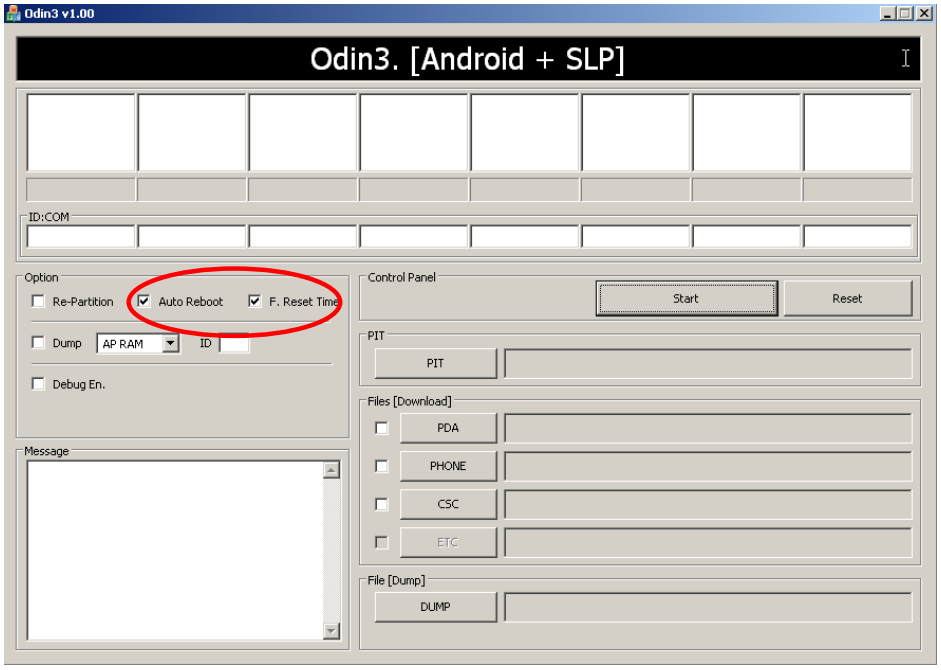

2. Select the PIT, PDA, PHONE & CSC file.

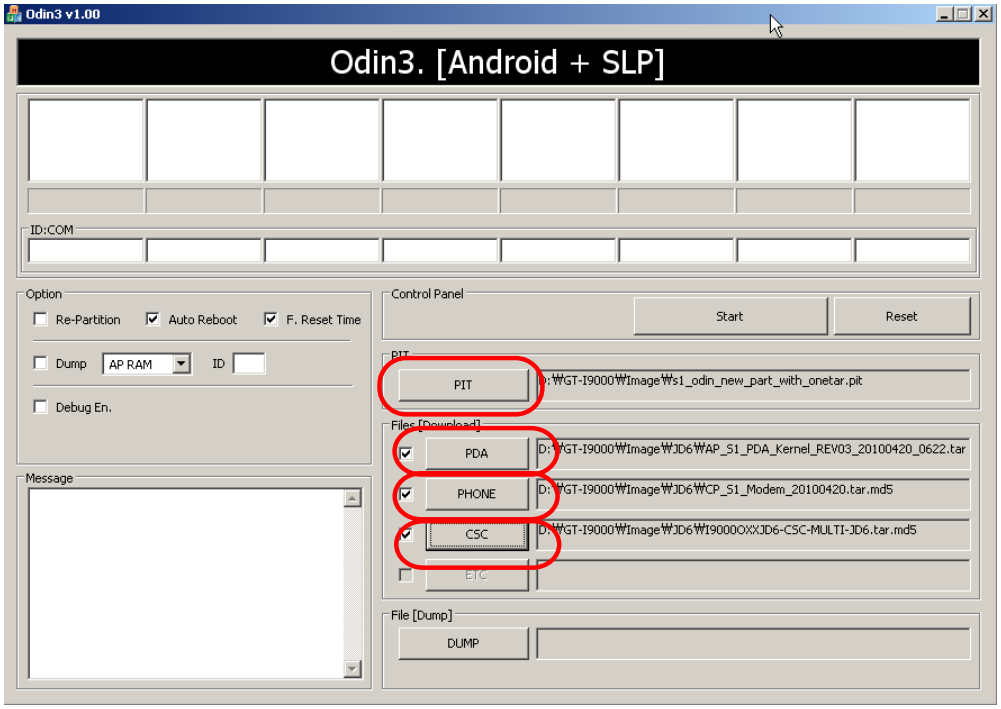

3. Enter Device into Download Mode

- Enter the device into Download Mode by pressing down on Volume Down button and OK button and Power On button at the same time.

Volume Down Button

Power On Button

OK Button

4. Connect the Handset to PC via a Data Cable. Make sure ID:COM box highlighted yellow to know that the handset is connected to the PC.

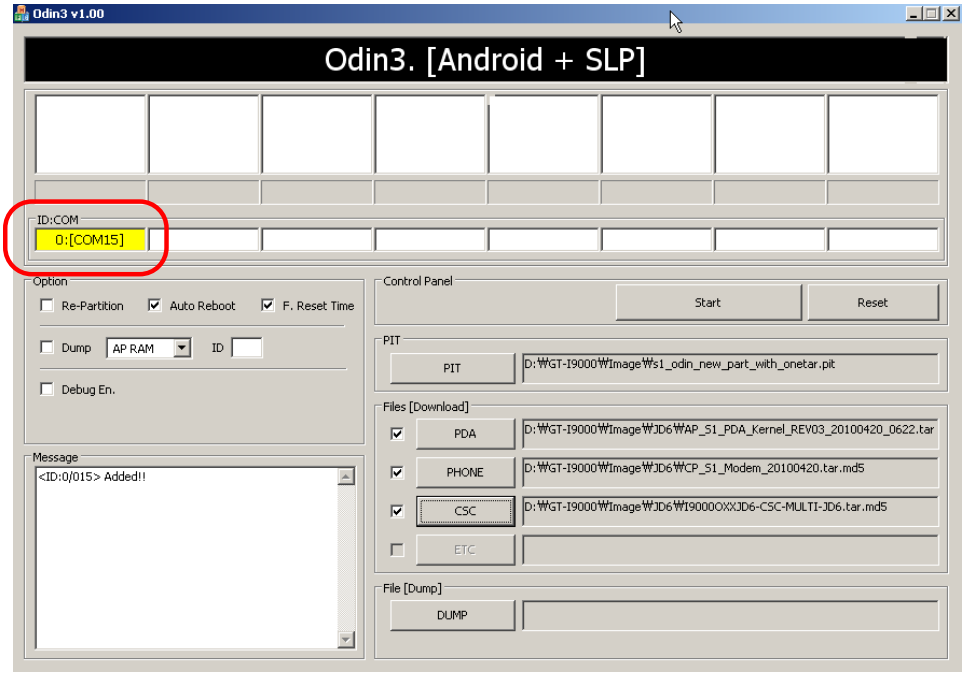

5. Start Downloading by clicking Start Button

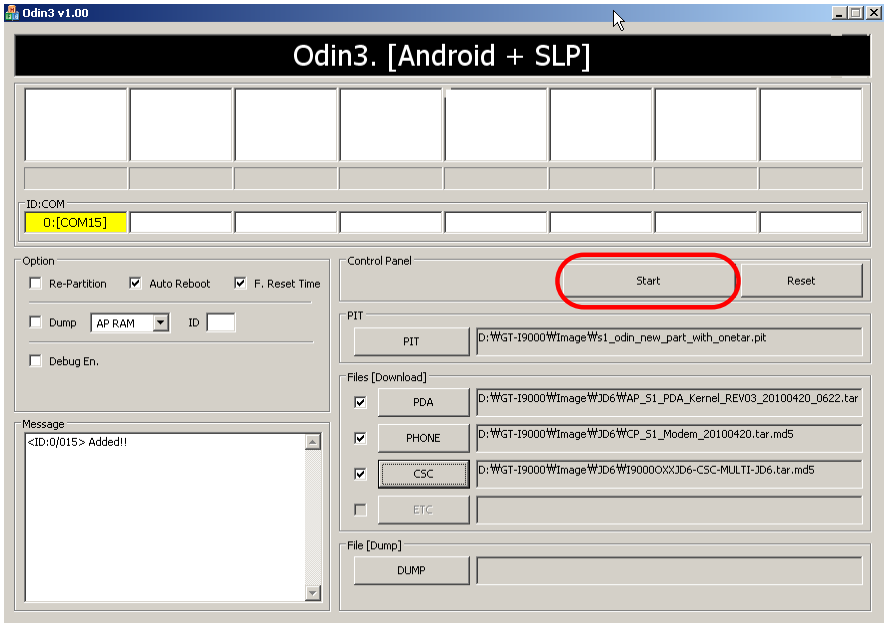

6. Handset reboots when download completes.

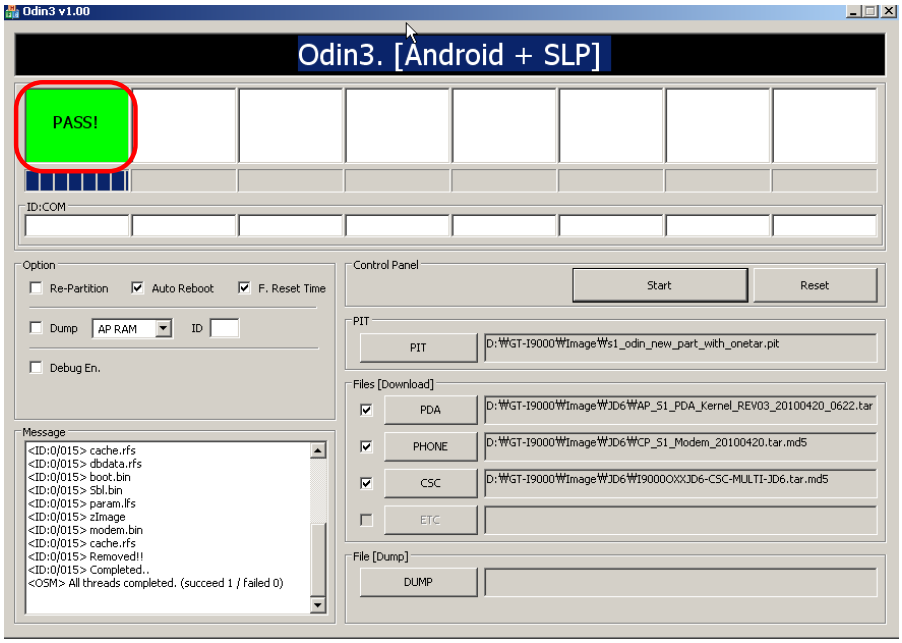

7. Confirm the downloaded version name and etc. :

***#1234#**

Full Reset :

***2767*3855#**

7. Level 2 Repair

7-1. Disassembly and Assembly Instructions

7-1-1. Disassembly

1 Unscrew screws on the rear 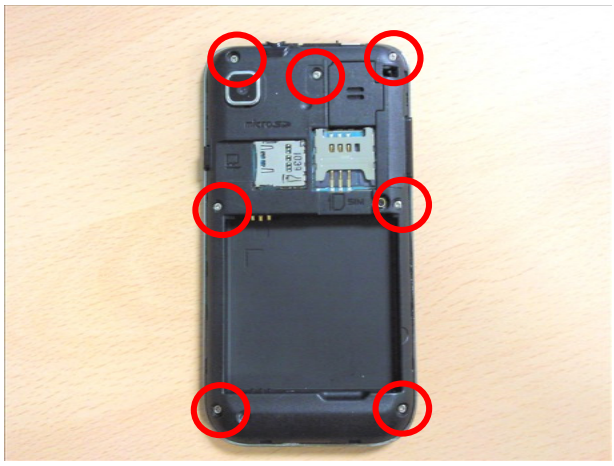	**2** Unhook the rear using a disassembly knife to remove the rear cover 
Unscrew 7 screws on the rear using a screw driver. screw torque : 1.2 ~ 1.4 kgf.cm	Be careful not to damage the rear cover when unhooking it.
3 Detach the Power Key FPCB 	**4** Disconnect connectors from the Main PBA 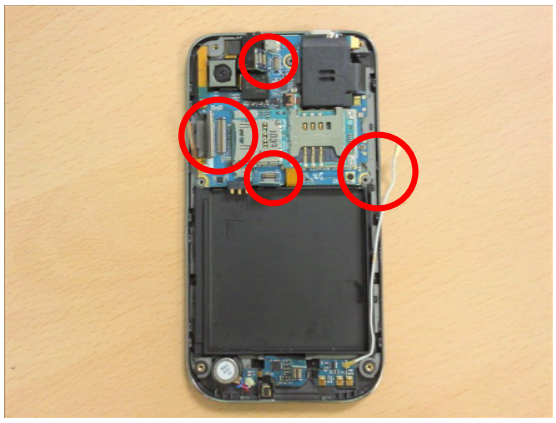
Detach the power key FPCB, that is stick to the bracket by a double-sided tape, using tweezers. Make sure to remove all remaining tape on the bracket.	Disconnect LCD Connector,Receiver Connector, Sub-touch Key Connector and Antenna cable from the Main PBA

5 Pull out the Main PBA 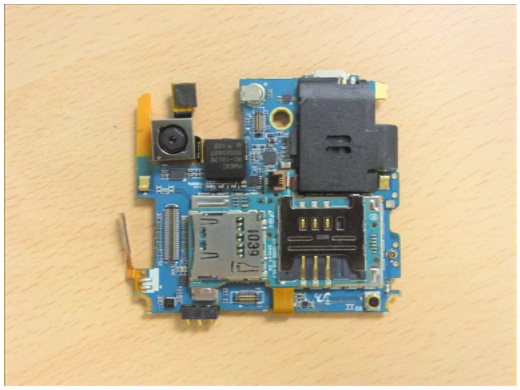	**6** Remove the Antenna Cable 
After disconnecting the connectors carefully pull the Main PBA out of the bracket.	Remove the antenna cable from the main Antenna PCB on the sub-touch key module.
7 Remove the top shield can 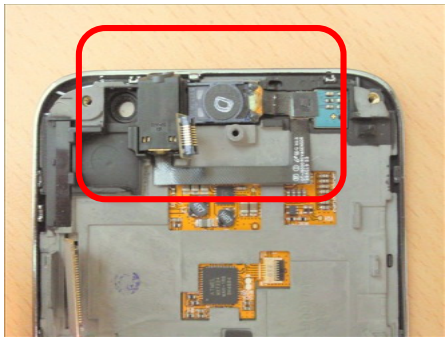 	**8** Remove the Camera Module 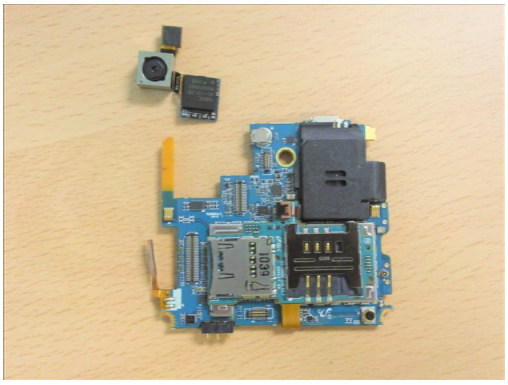
Pull out the Receiver module from the bracket. Be careful not to damage the FPC.	Remove the camera module from the Main PBA by pulling it out.

9 Pull out the Main PBA 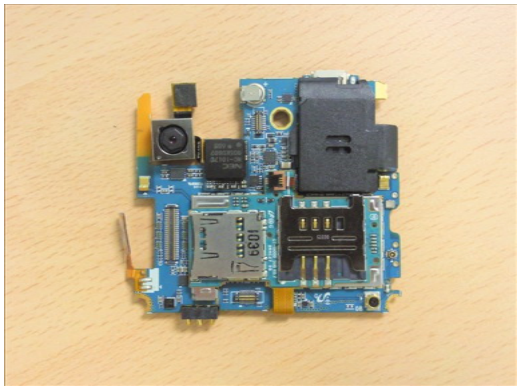	**10** Remove the top shield can 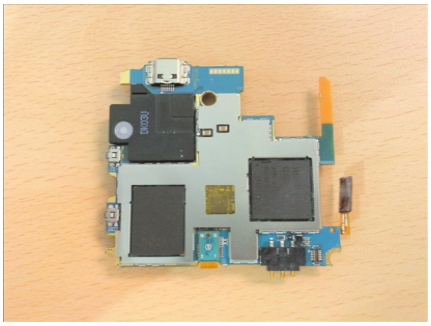 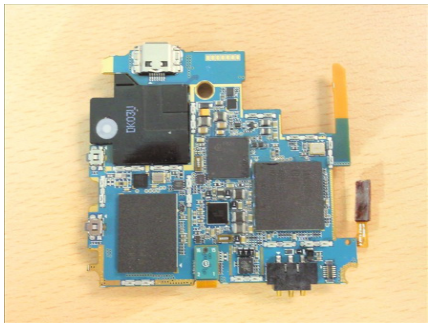
After disconnecting the connectors carefully pull the Main PBA out of the bracket.	Be careful not to damage the shield can and the components when removing it.
11 Remove the rear shield can + Sim Card PBA 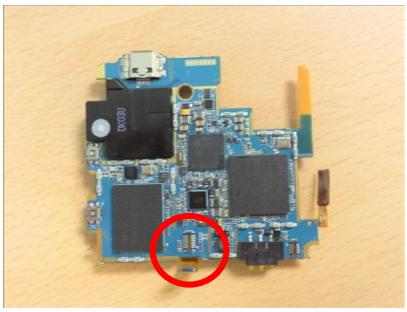 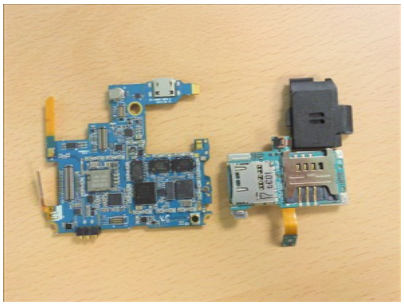	**12** Remove the speaker 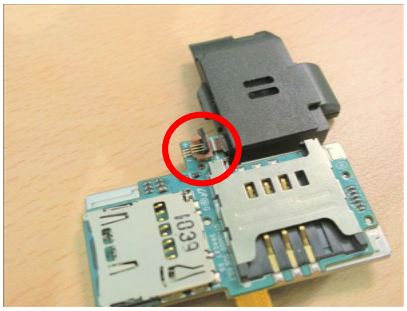 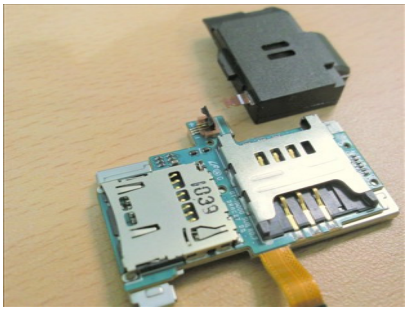
Disconnect the Sim Card PBA connector from the Main PBA then remove the rear shield can + Sim Card PBA	Remove the speaker by opening the connector.

7-1-2. Assembly

1 Place the top shield can. 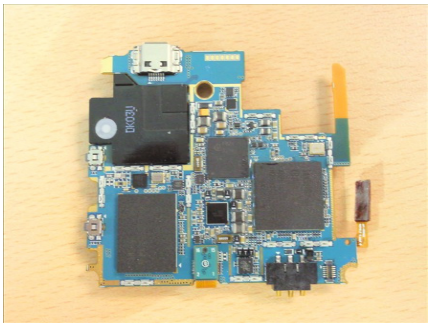 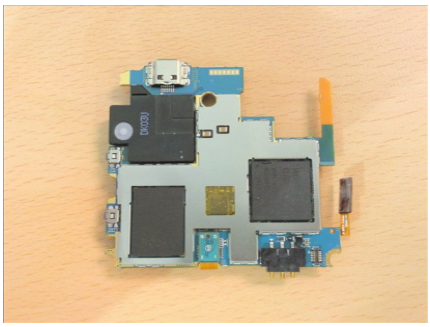	**2** Connect the speaker to the Sim Card PBA 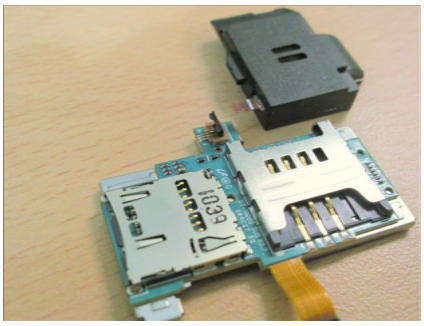 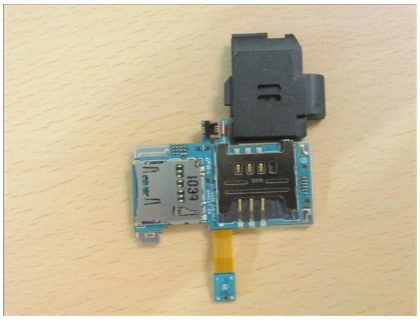
Place the top shield can on the Main PBA	Connect the speaker to the Sim Card PBA by sliding FPC into the connector.
3 Place the Sim Card PBA + shield can 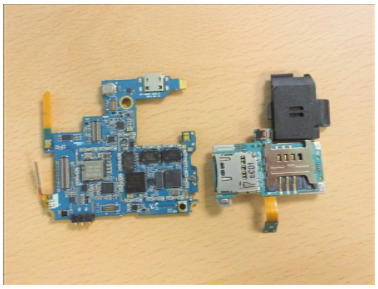 	**4** Connect the Sim Card PBA Connector 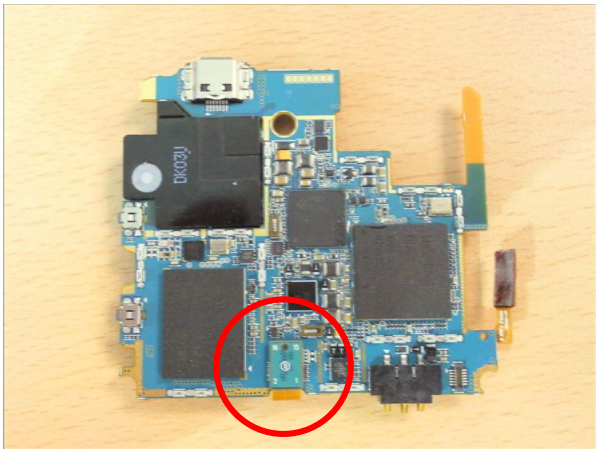
Place the bottom shield can + Sim Card PBA onto the bottom of the Main PBA. Make sure that the speaker locks into position and the shield can to be place correctly into the clips.	Connect the sim card PBA connector to the top of the main PBA.

5 Place the top shield can 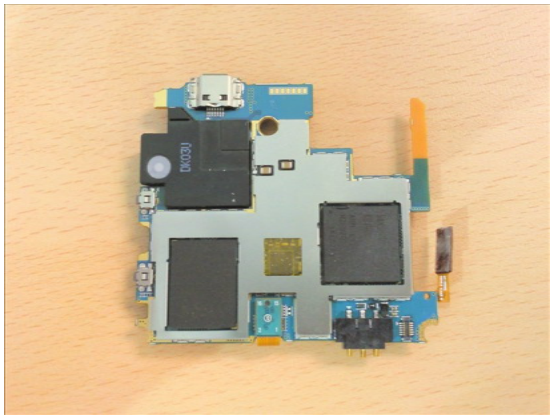	6 Place the camera module 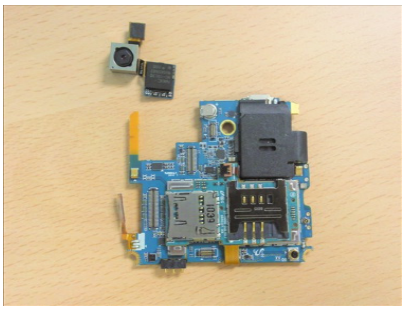 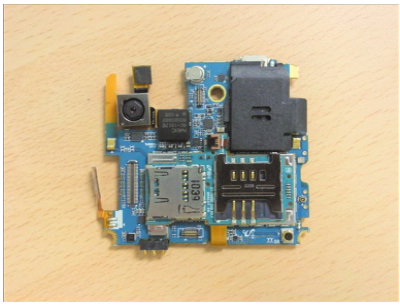
Place the top shield can on the top of the main PBA	Connect the camera module to the Main PBA
7 Place the Receiver Module 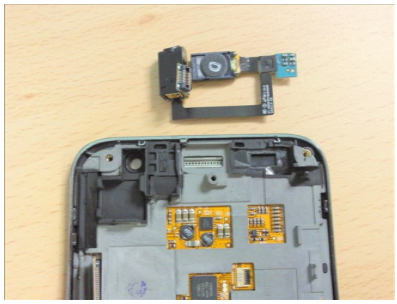 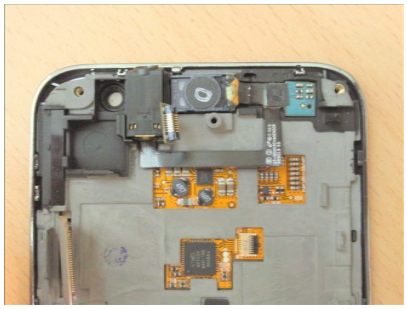	8 Connect the Antenna Cable 
Place the receiver module onto the bracket.	Connect the antenna cable to the Main Antenna PCB

9 Place the Main PBA 	**10** Connect LCD, Sub-touch key, Antenna and Receiver connectors and place the Power key 
Place the main PBA onto the bracket. Make sure to place the camera module into the socket correctly.	Connect LCD, Sub-touch key, Antenna and Receiver connectors, and place the Power key to the side of the bracket
11 Place the rear cover 	**12** Screw the rear cover 
Make sure all the hooks are placed correctly, and press the volume keys and the power key for tensions.	Screw 7 points on the rear cover screw torque : 1.2 ~ 1.4 kgf.cm

8. Level 3 Repair

8-1. Block Diagram

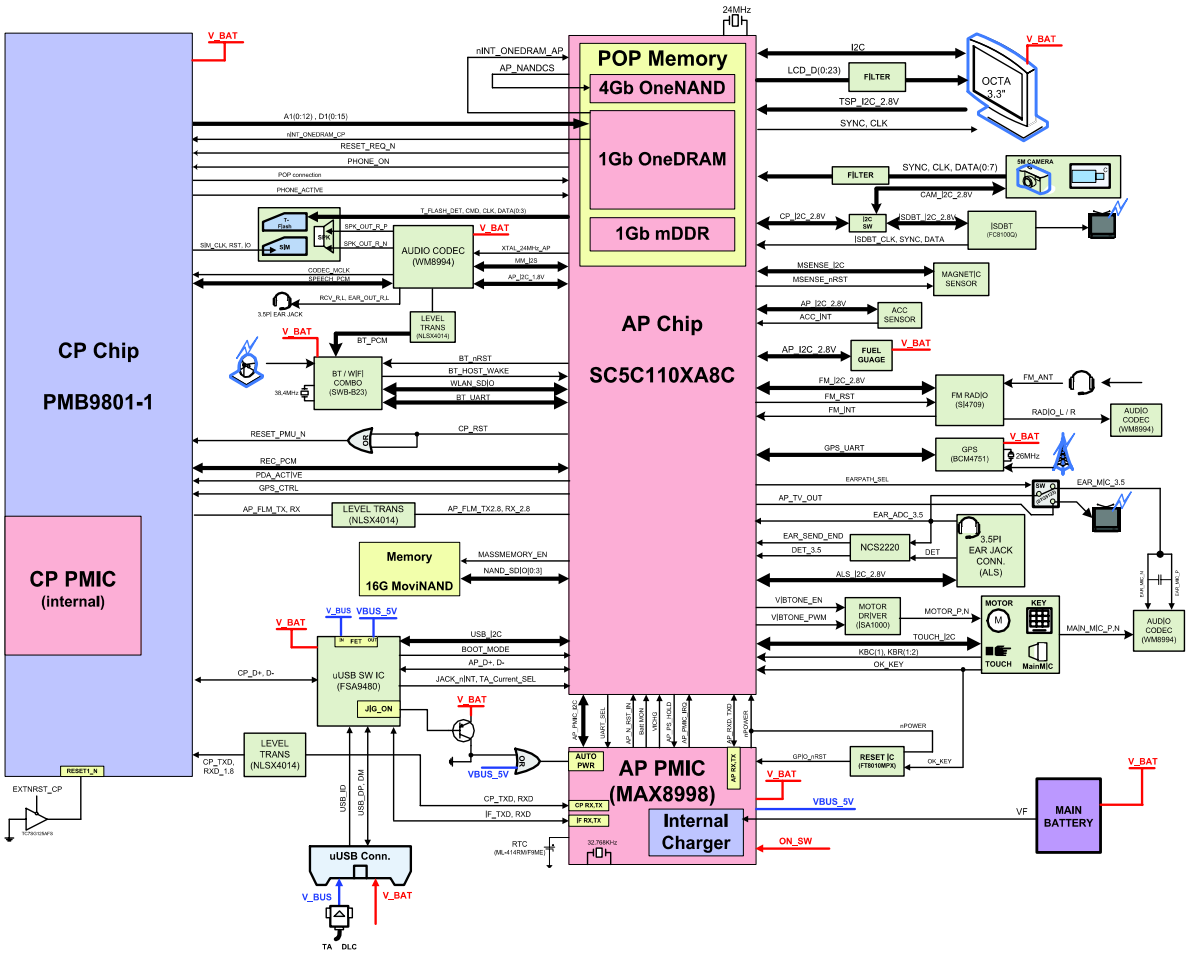

8-2. PCB Diagrams

8-2-1. Top

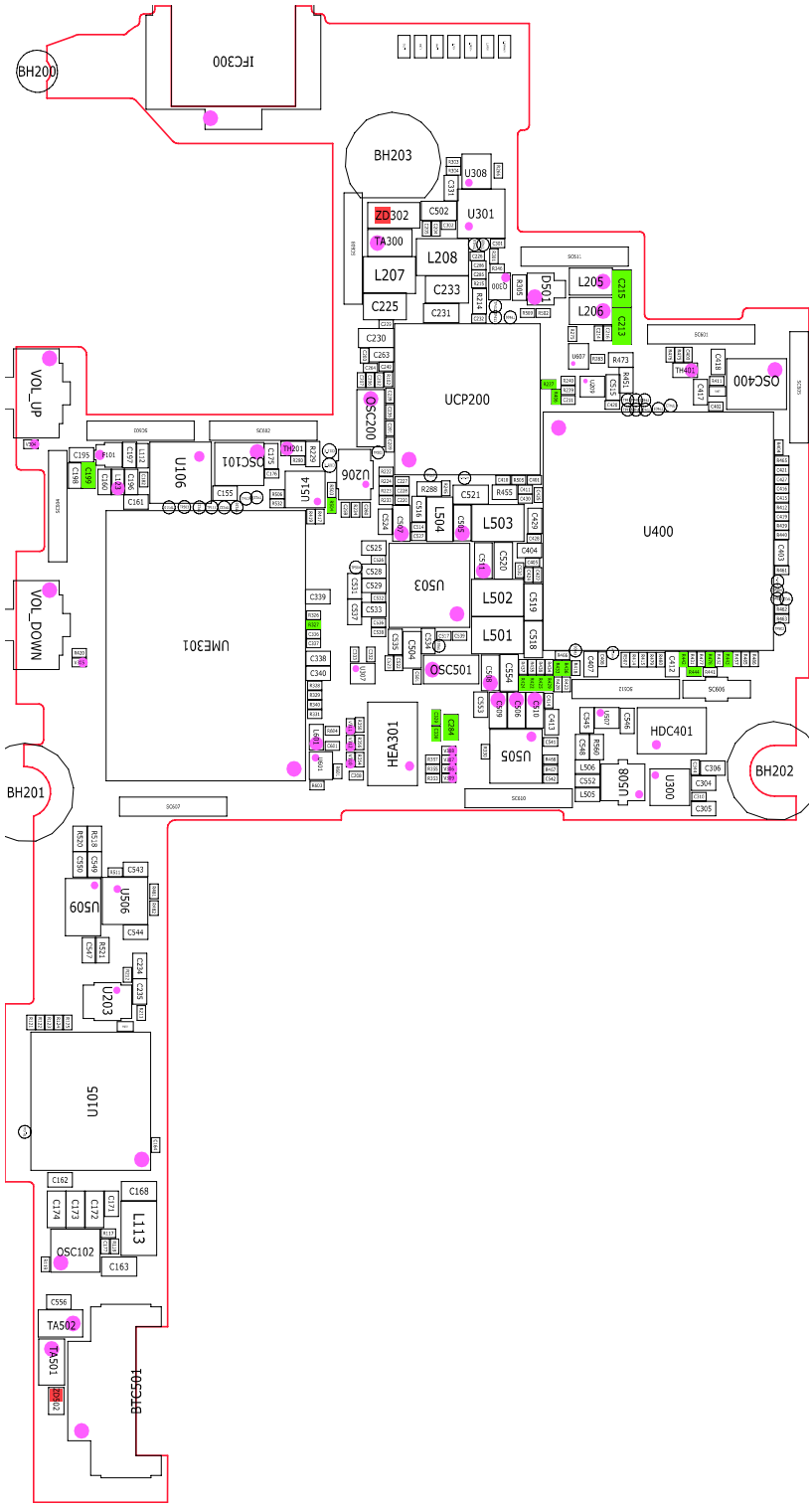

8-2-1. Bottom

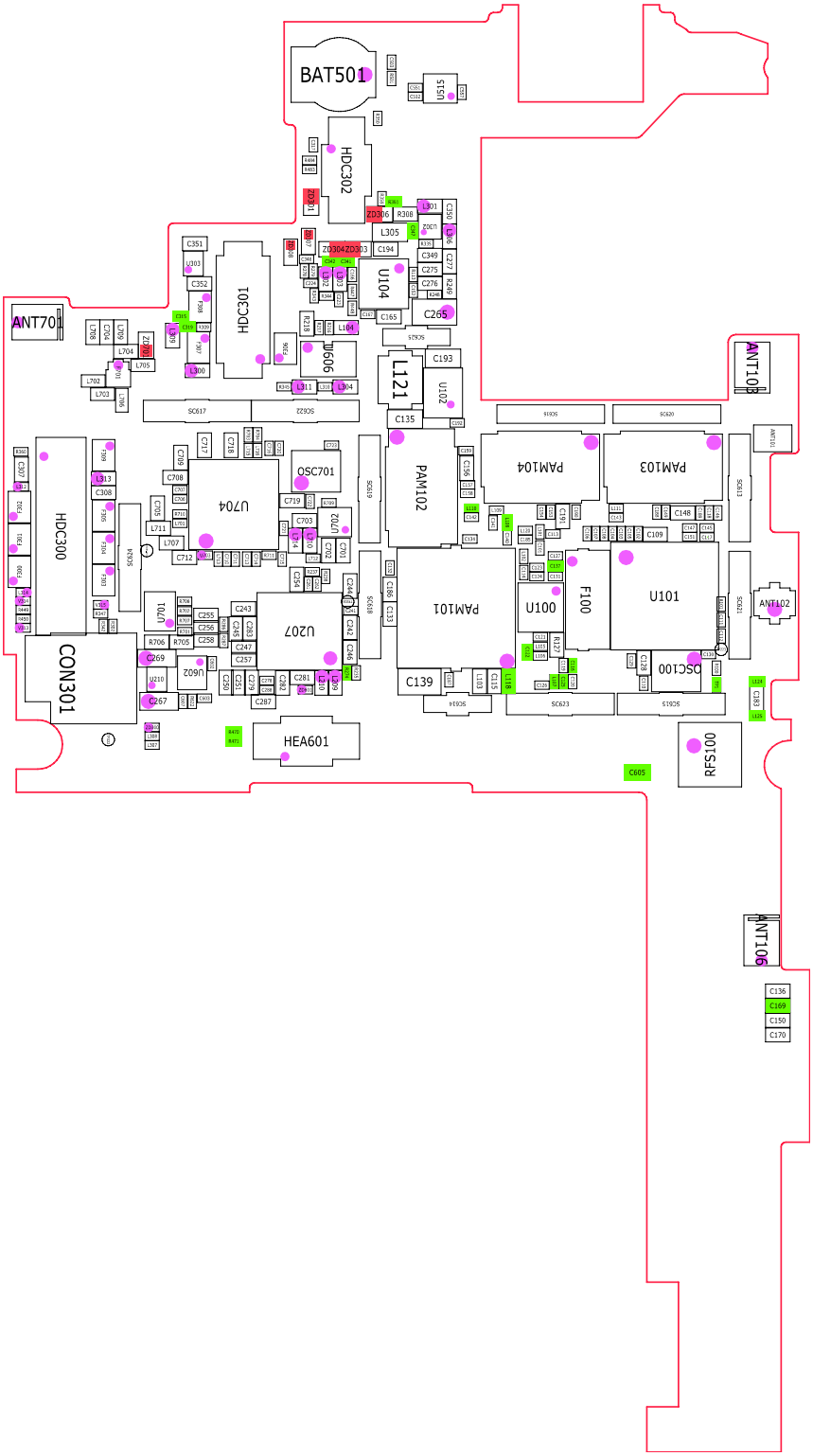

8-3. Flow Chart of Troubleshooting

Equipments

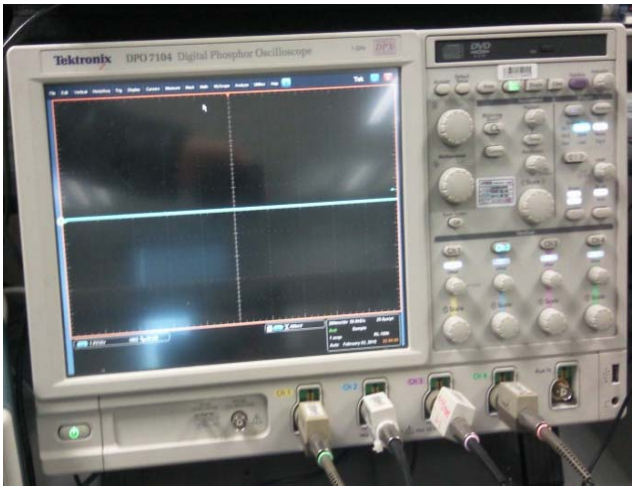

↑ Oscilloscope

↑ Digital Multimeter

↑ Power Supply

↑ + driver, Tweezer

8-3-1. Power On

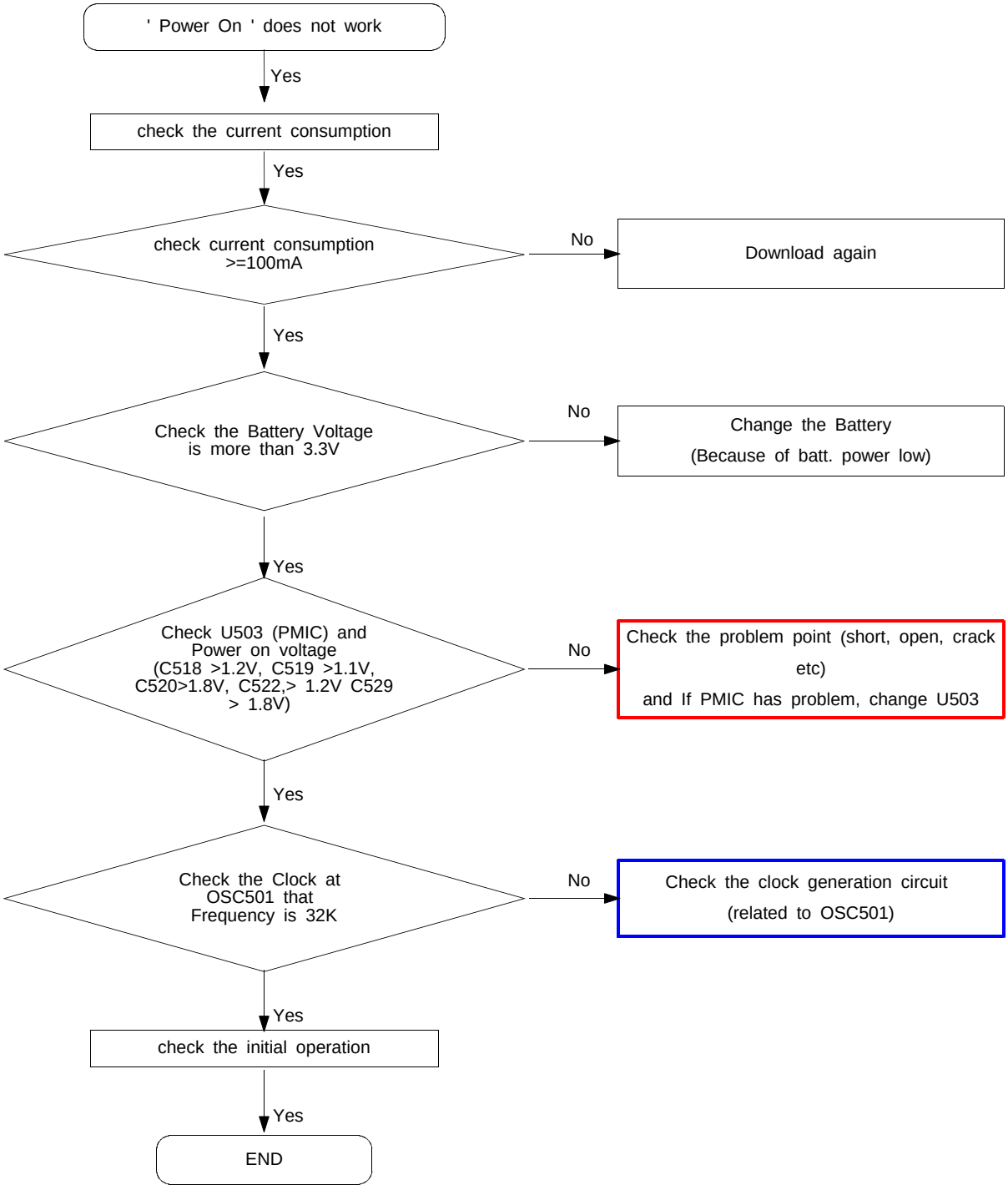

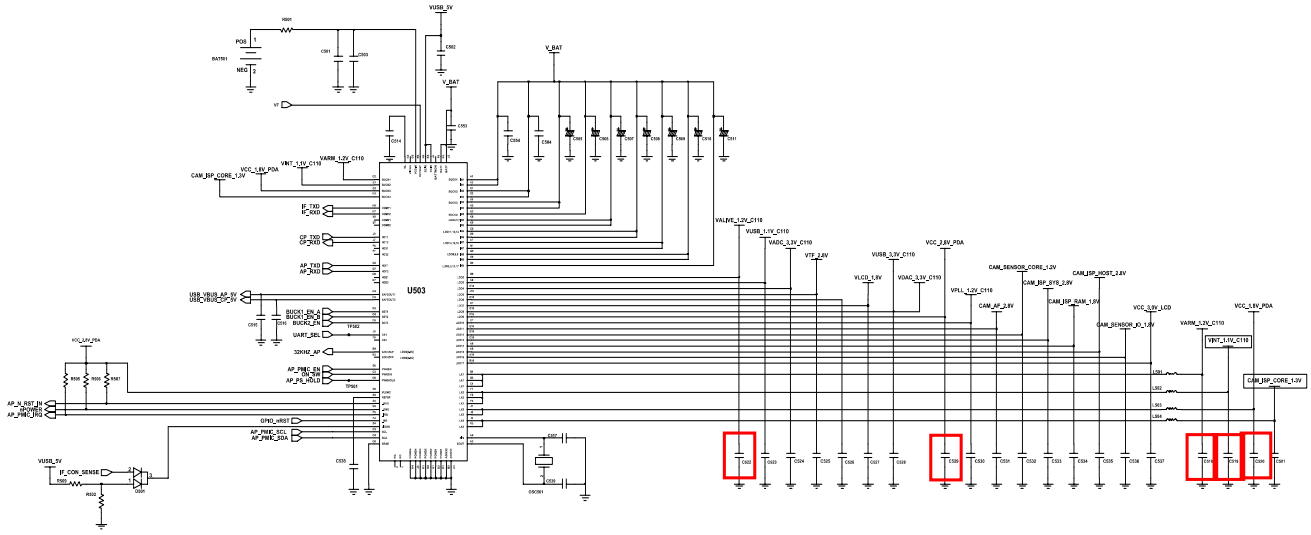

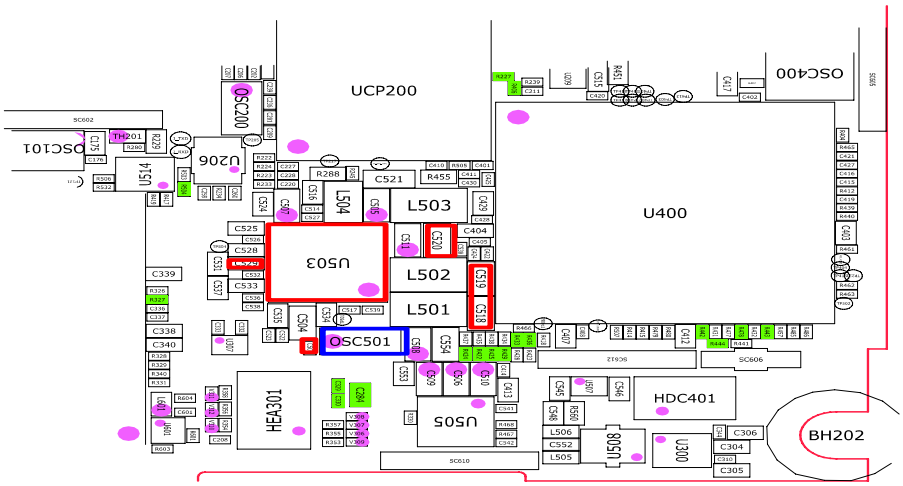

8-3-2. Initial

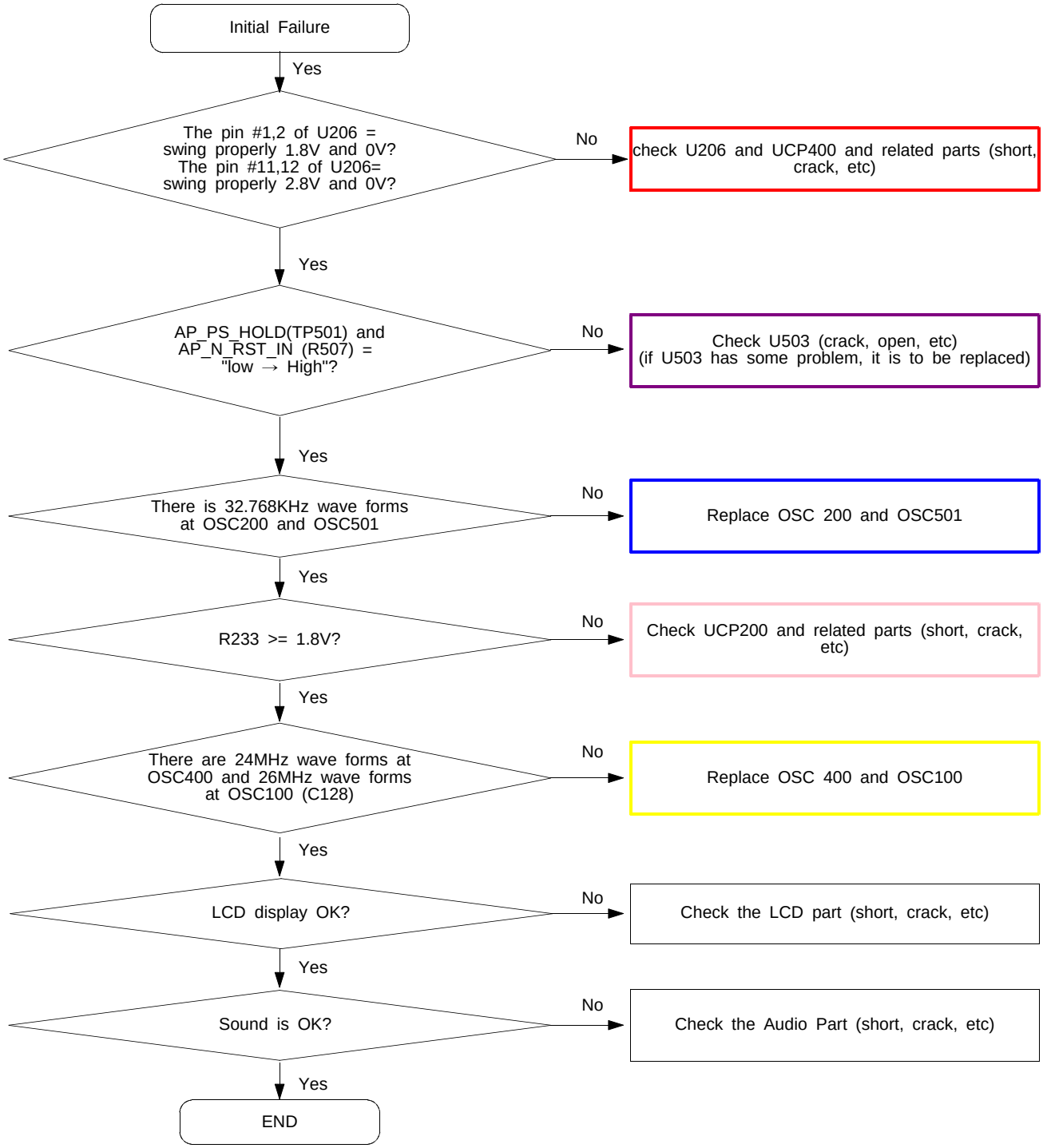

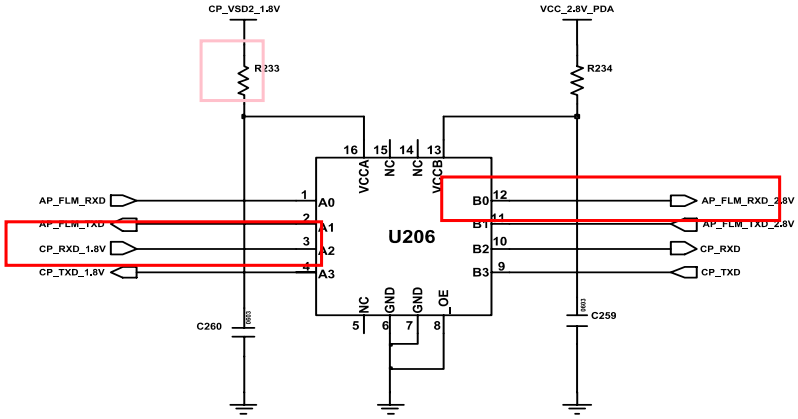

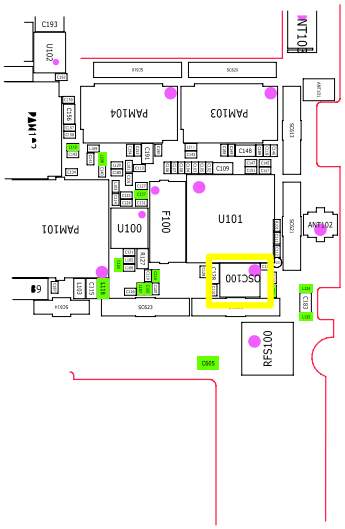

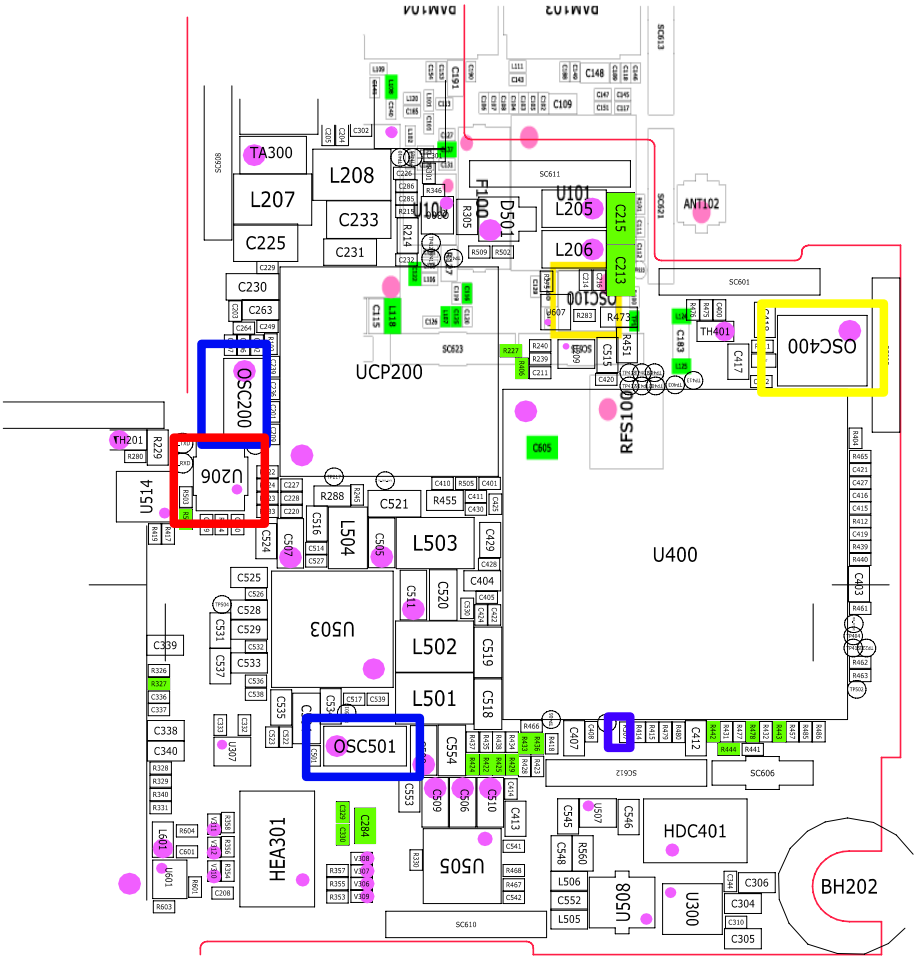

8-3-3. Charging Part

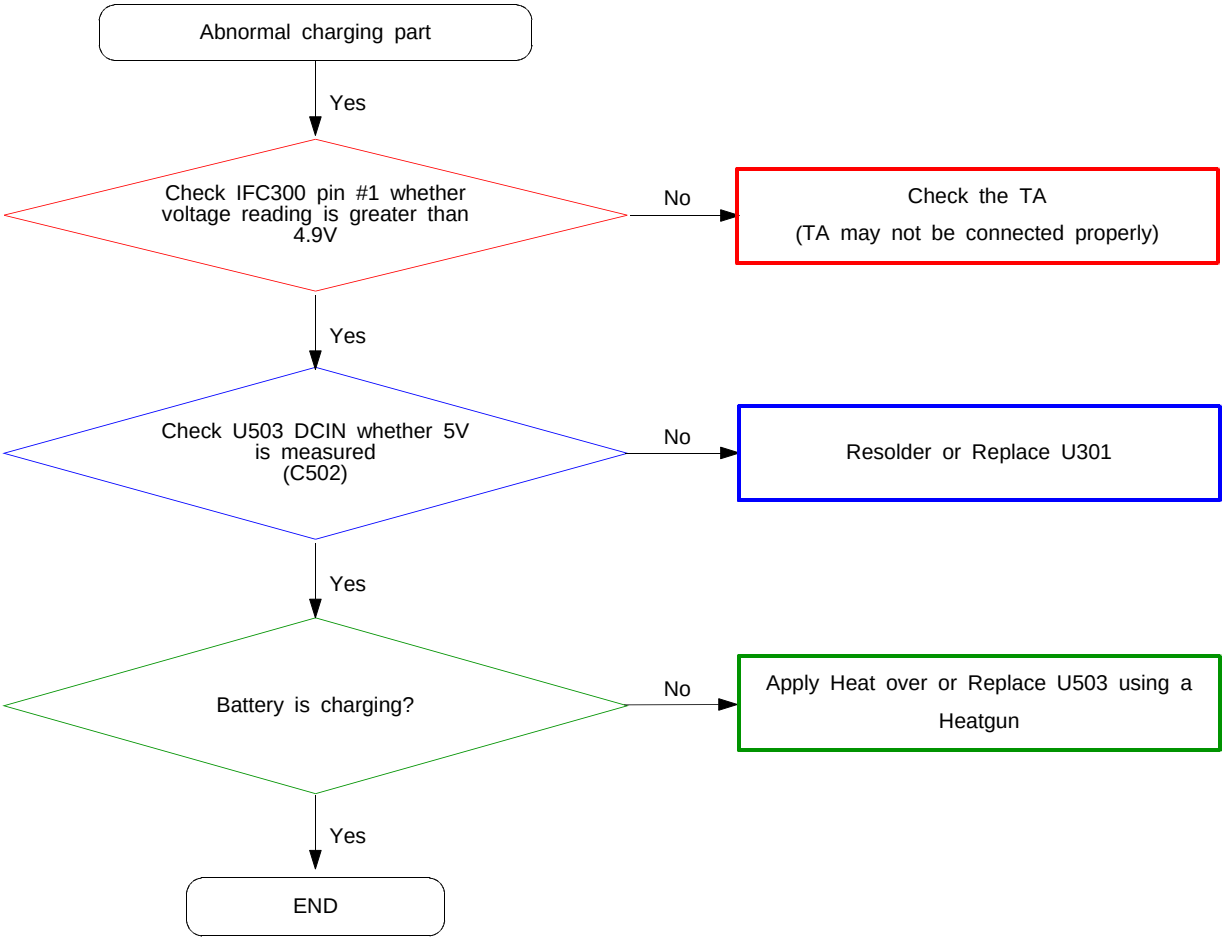

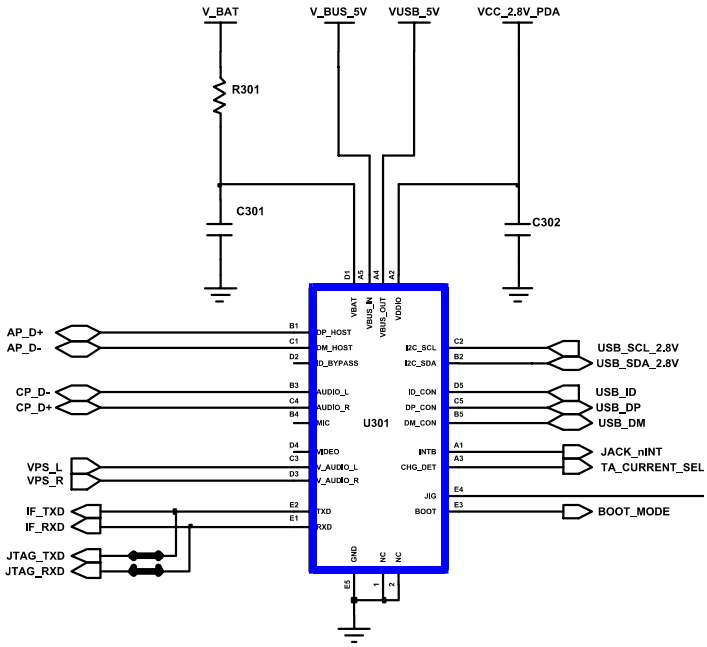

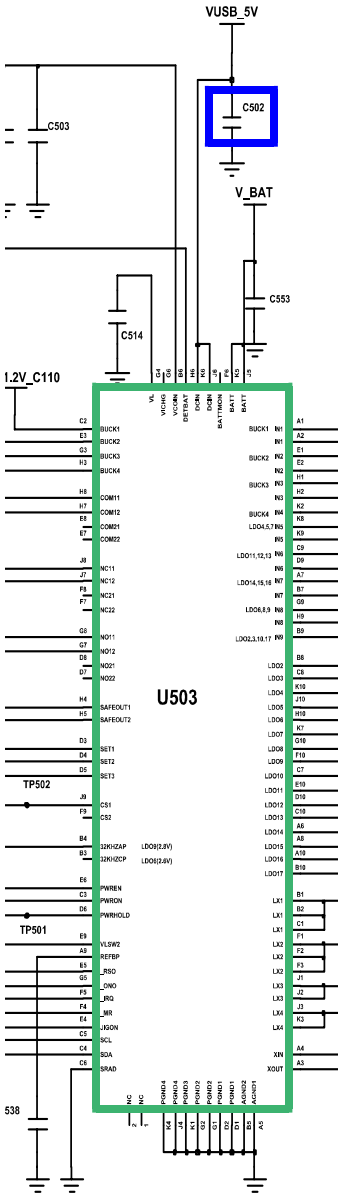

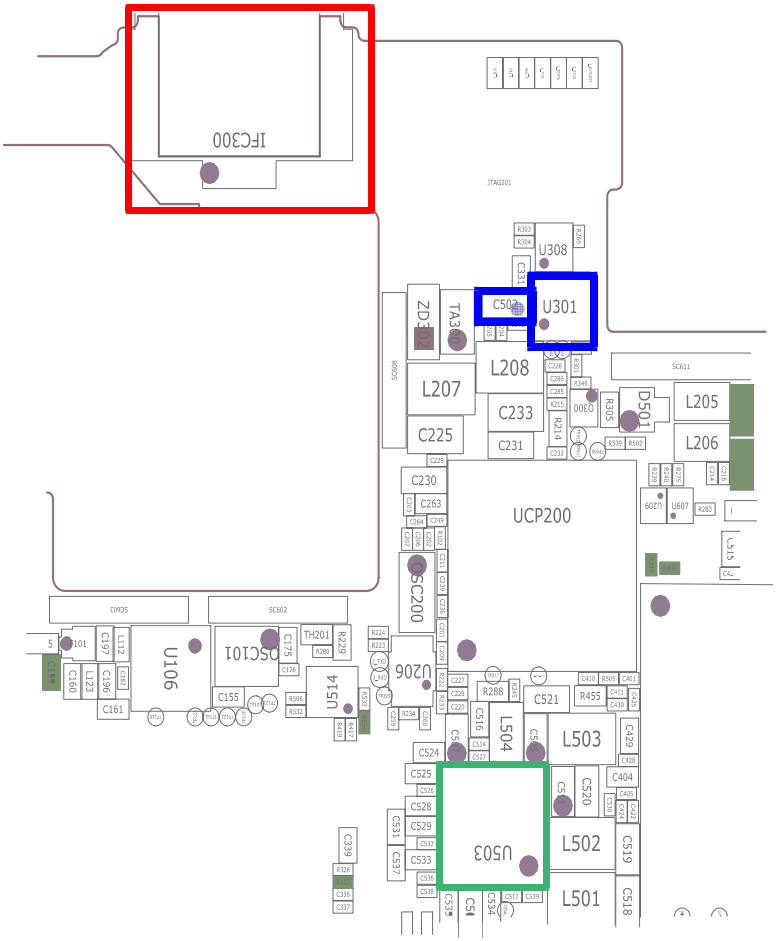

8-3-4. Sim Part

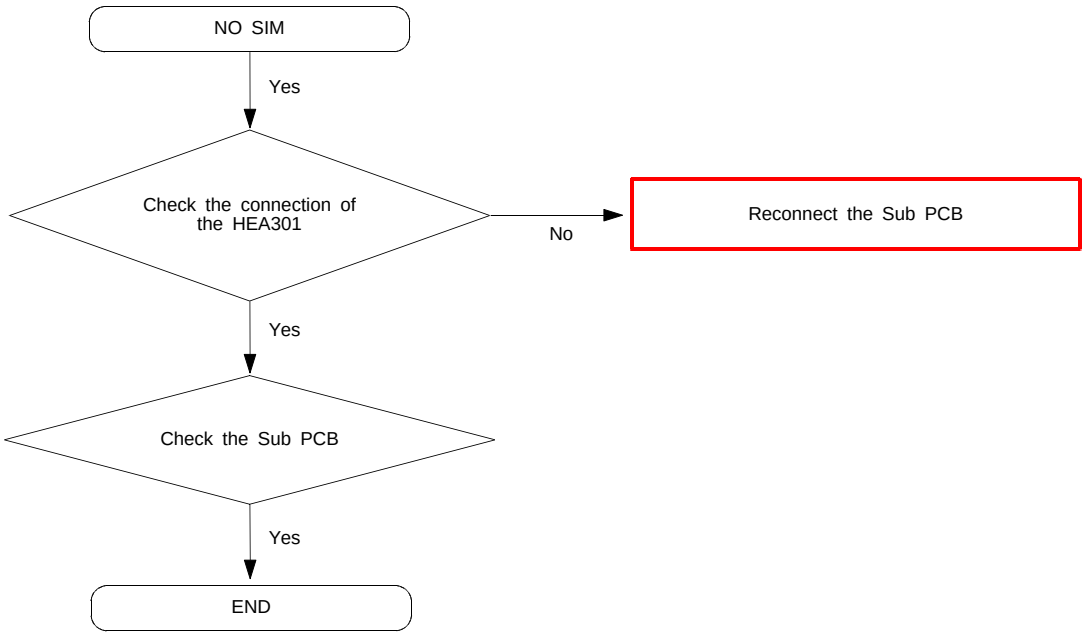

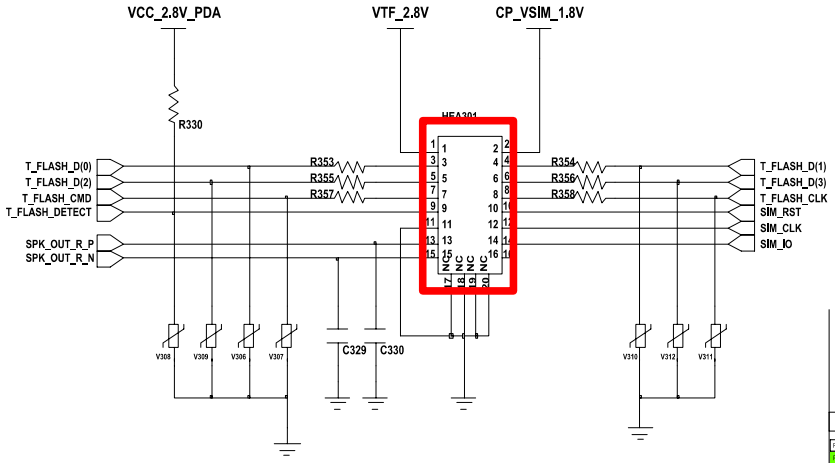

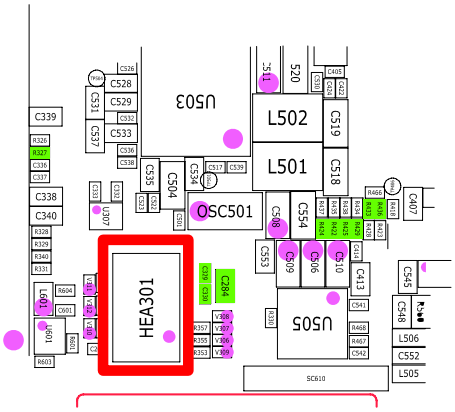

8-3-5. Microphone Part

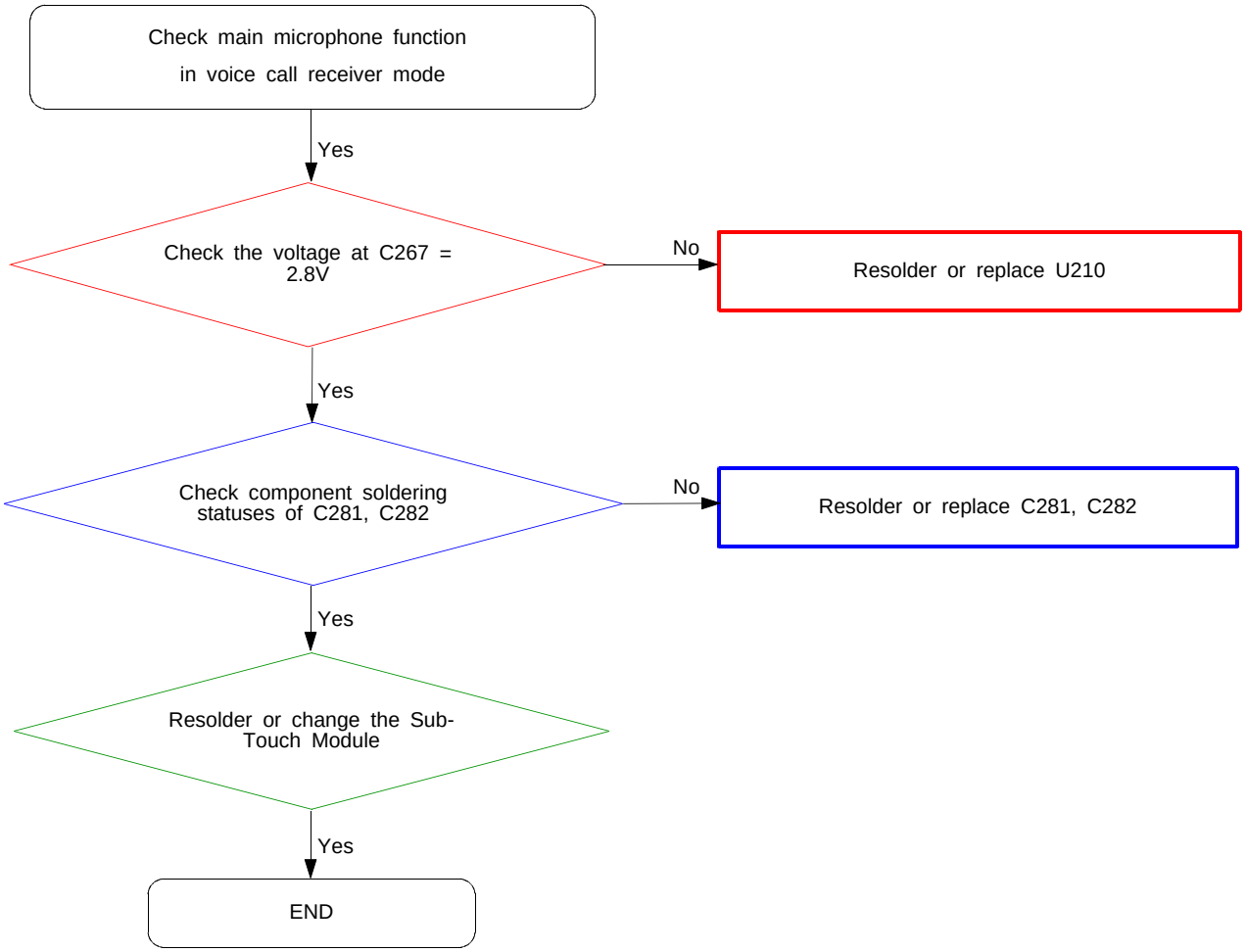

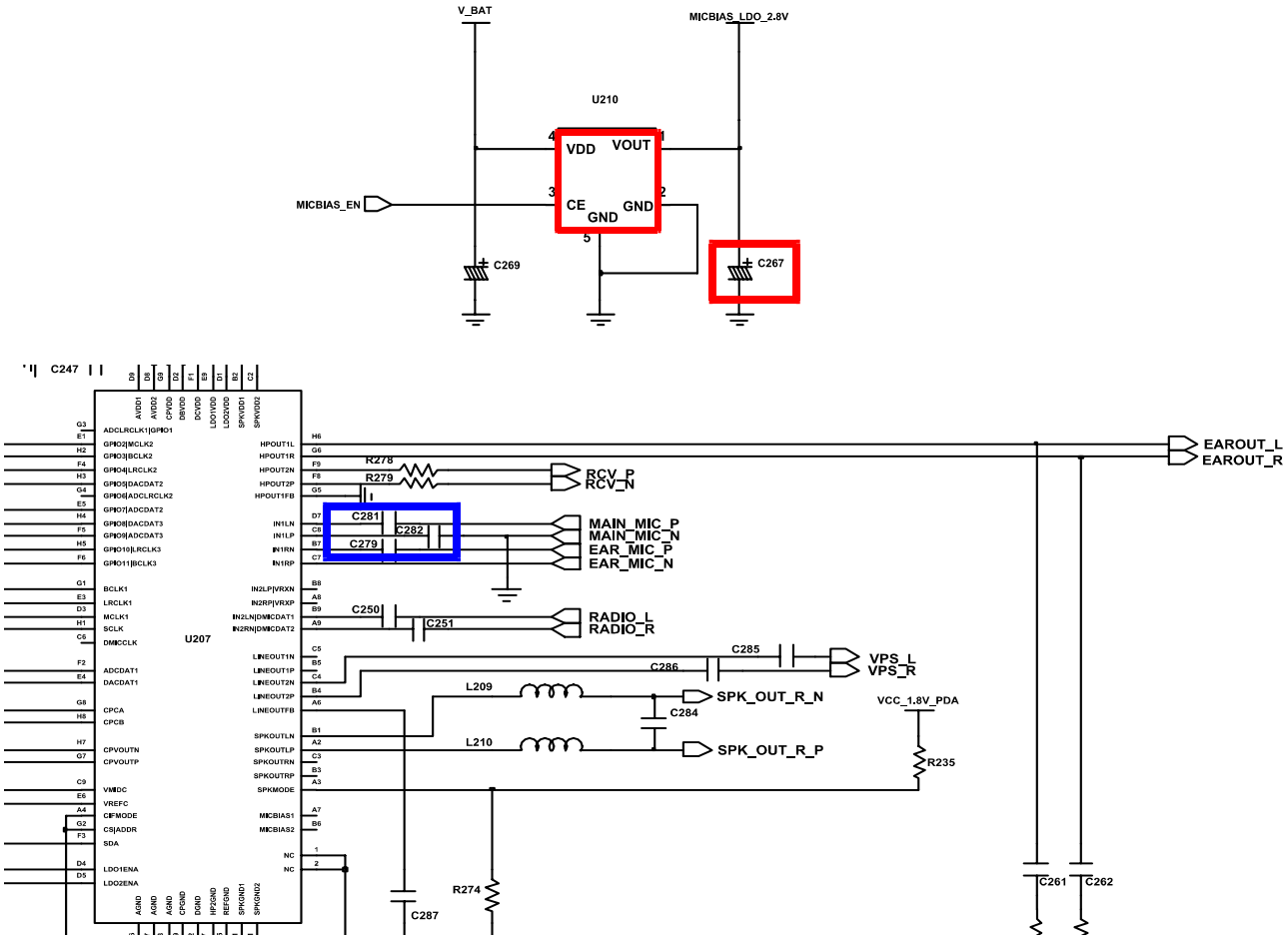

8-3-6. Speaker Part

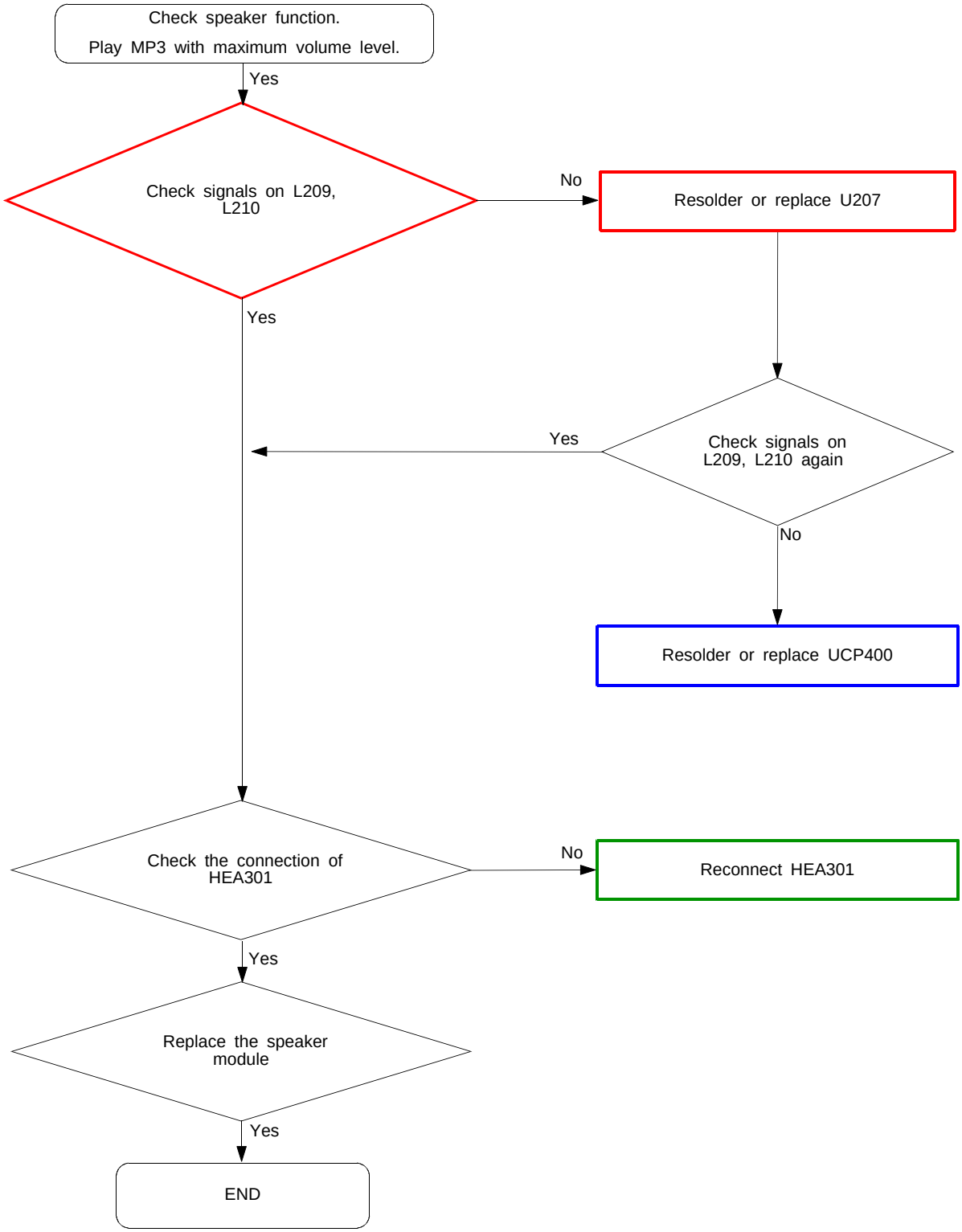

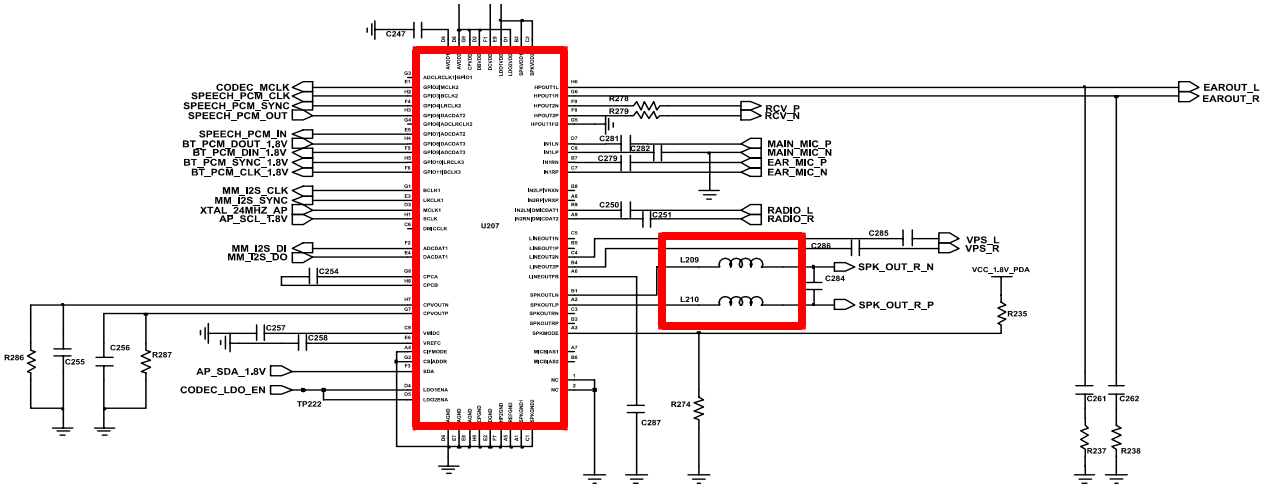

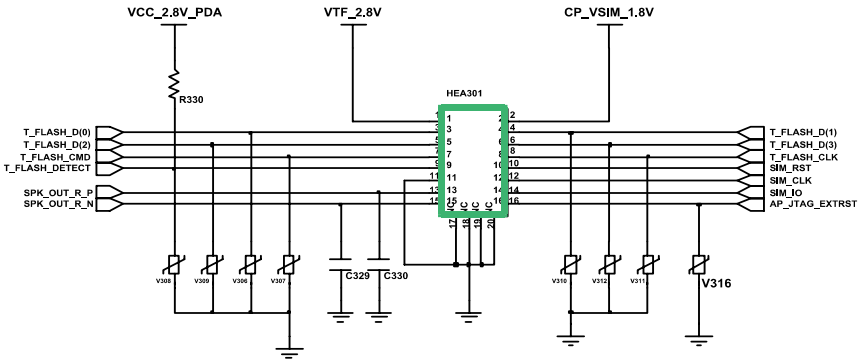

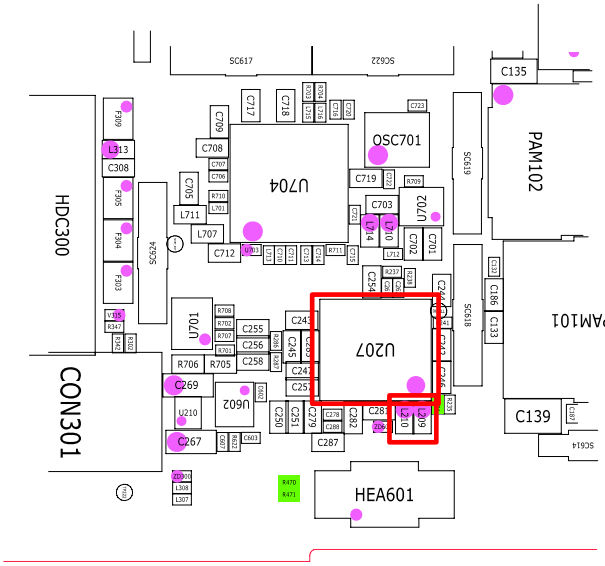

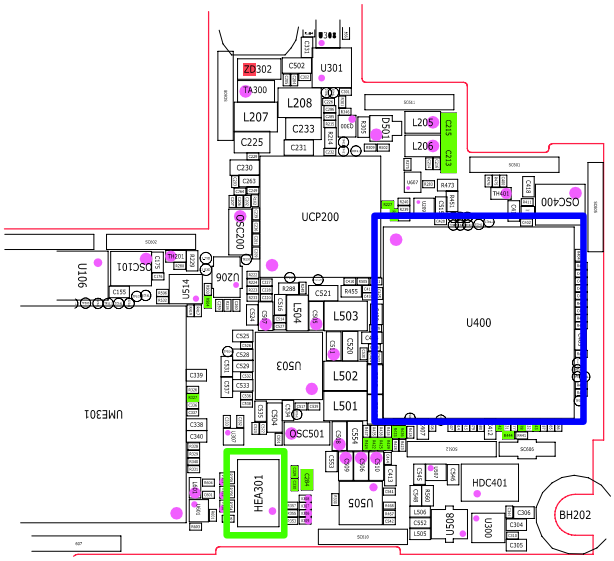

8-3-7. Receiver Part

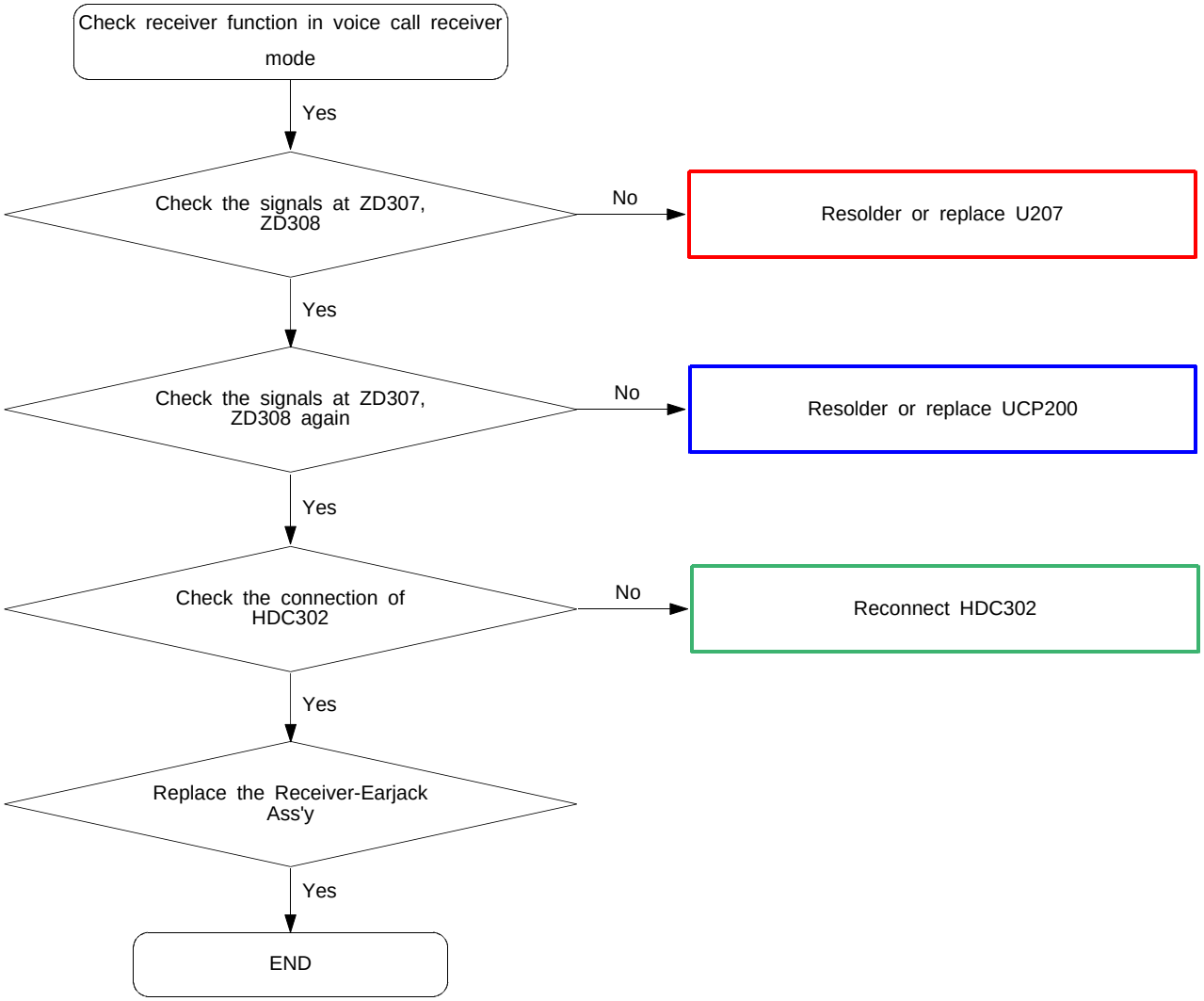

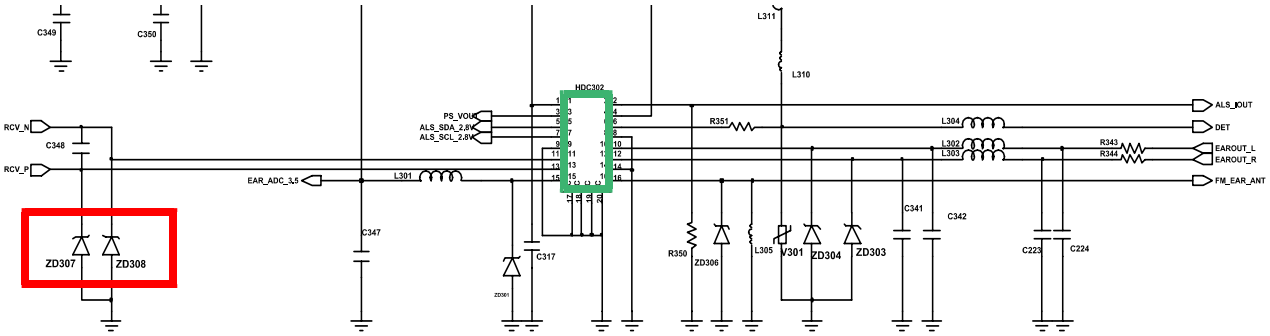

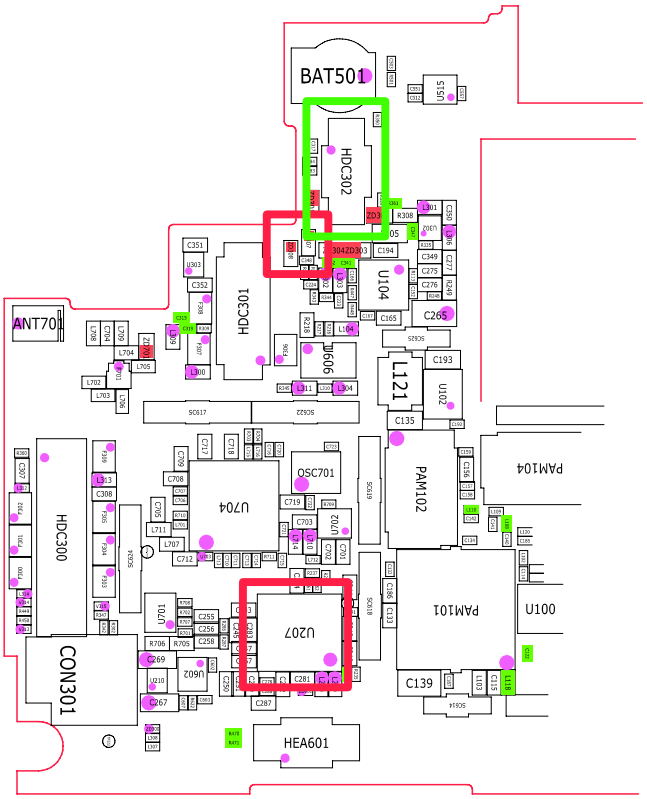

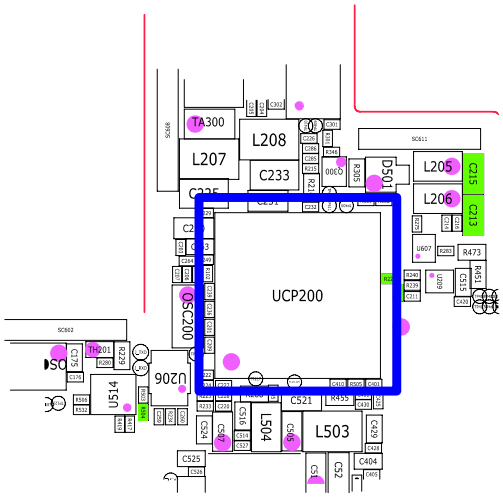

8-3-8. BT/WIFI

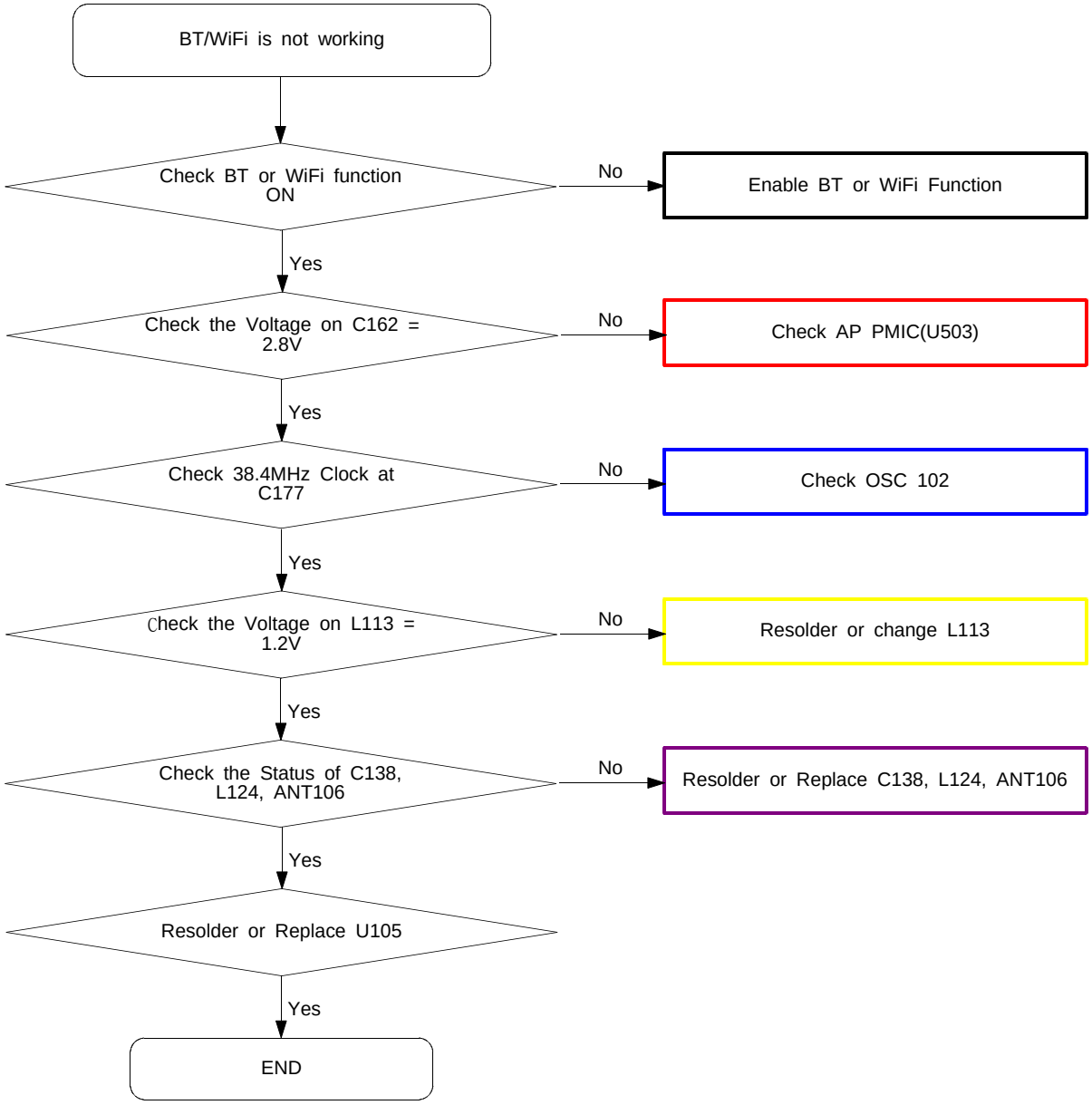

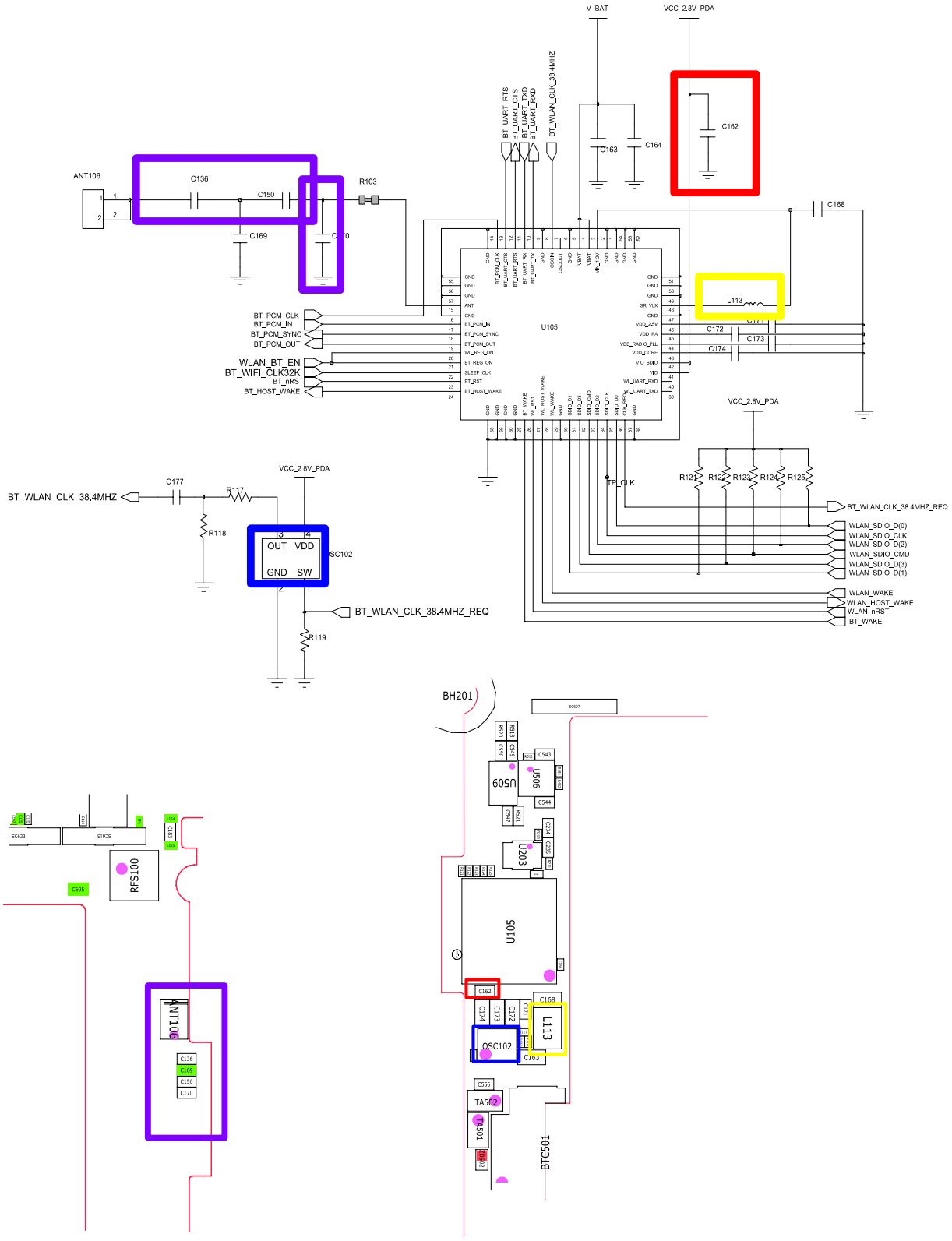

8-3-9. FM RADIO

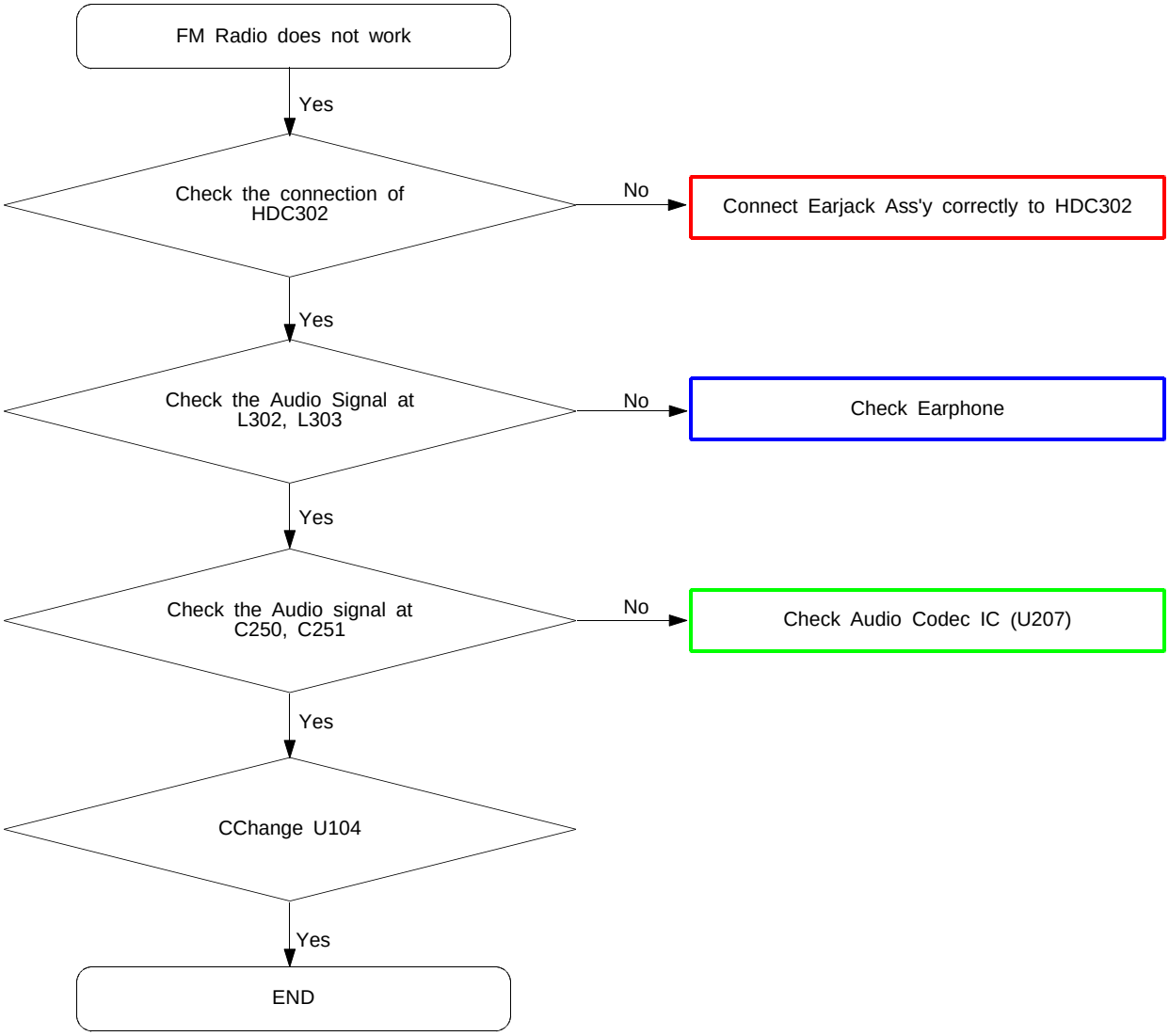

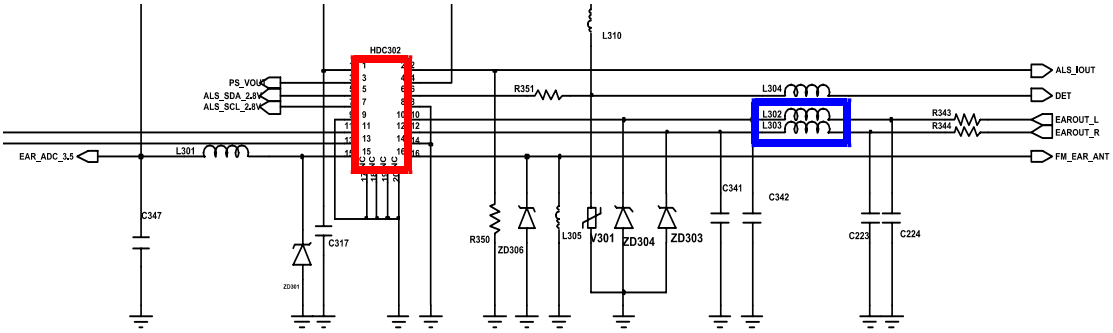

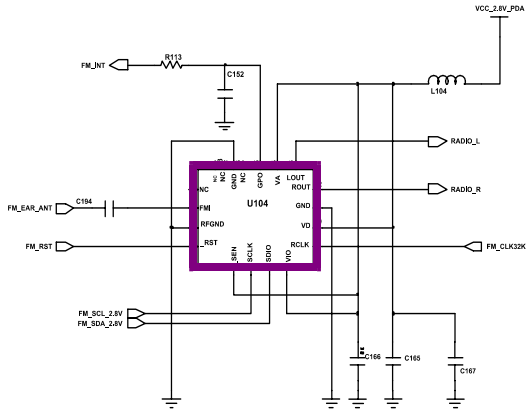

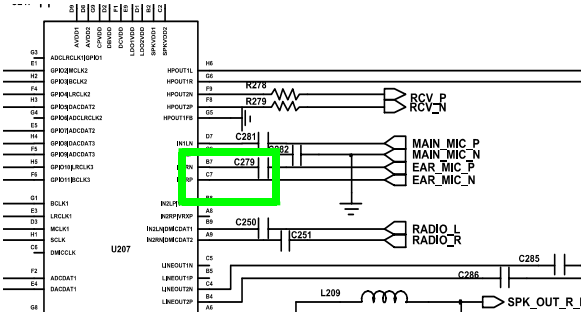

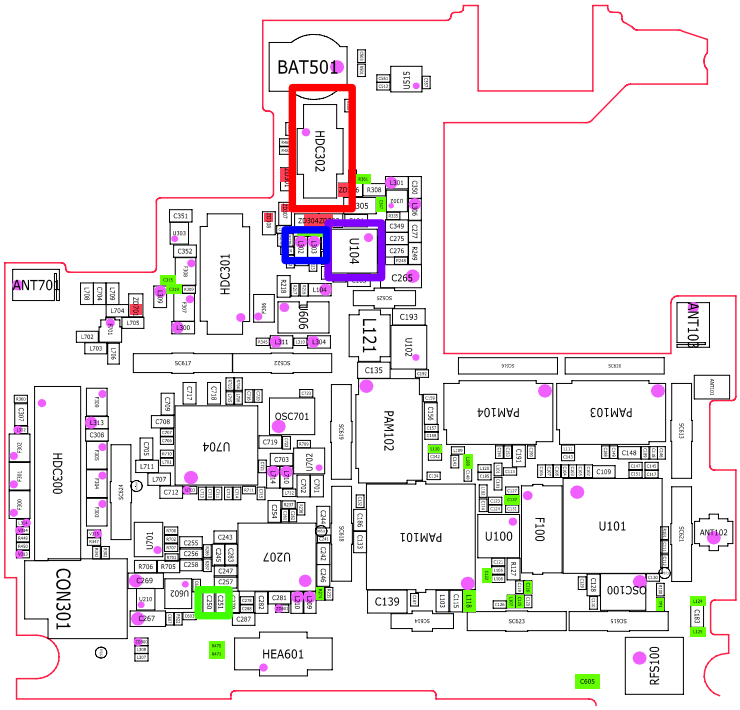

8-3-10. LCD

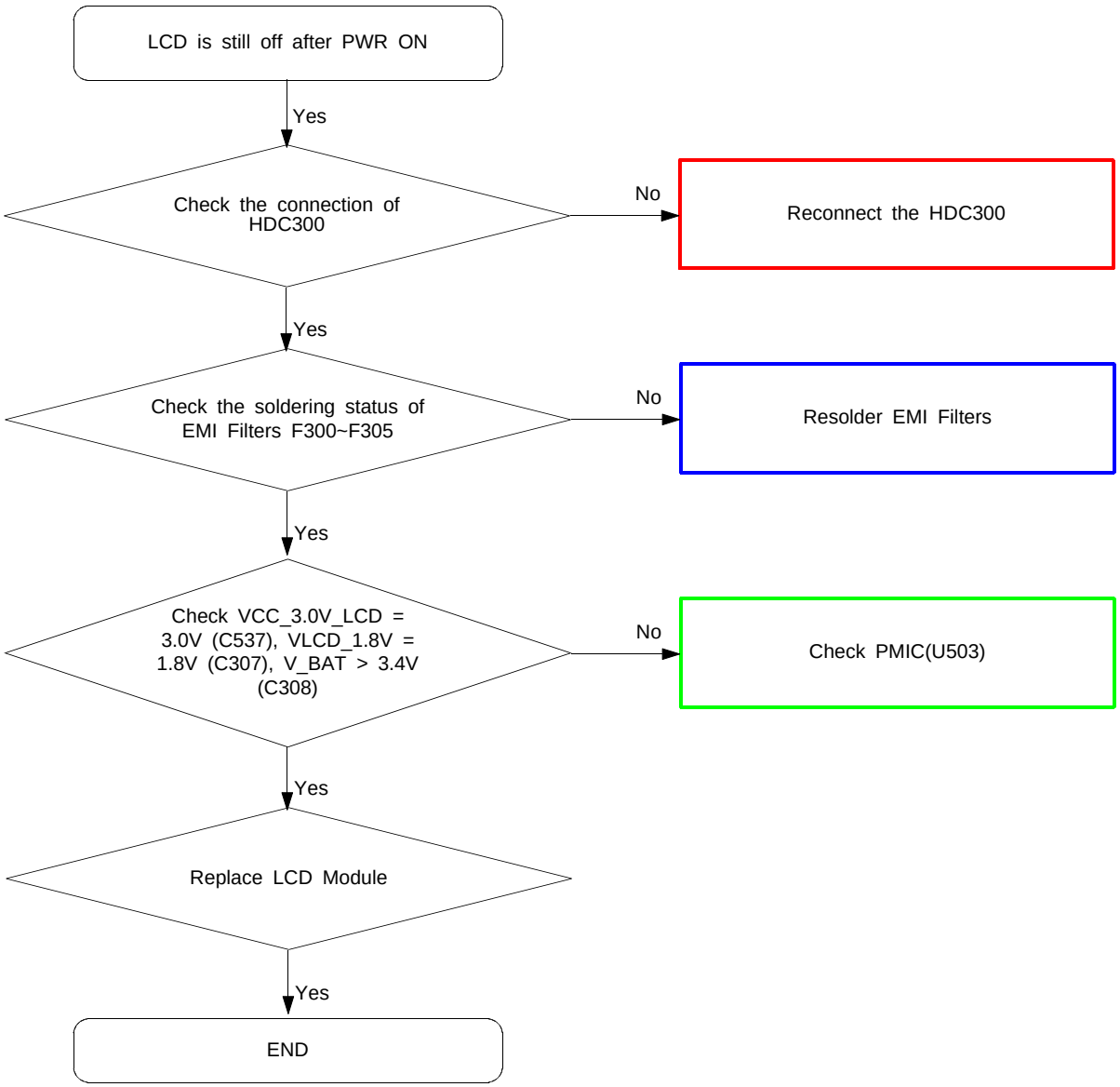

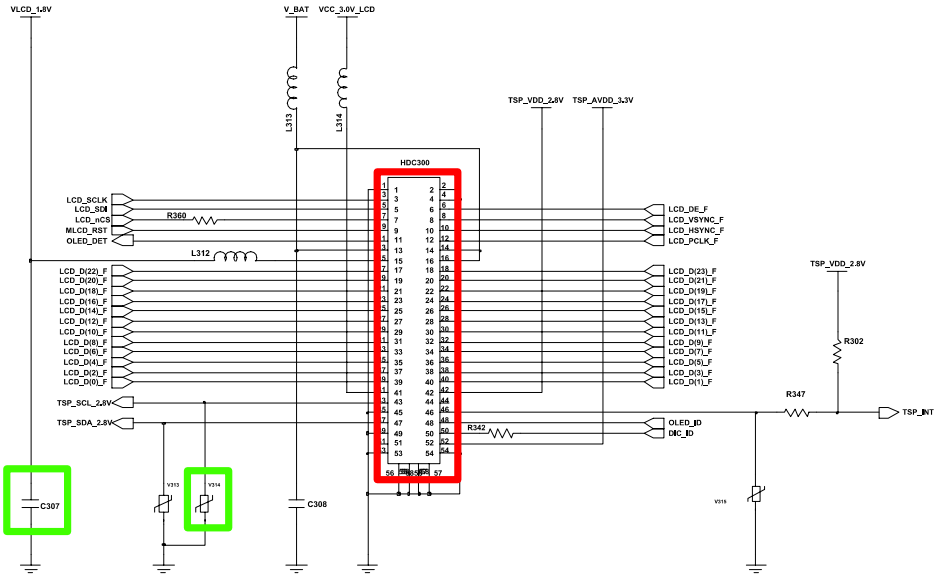

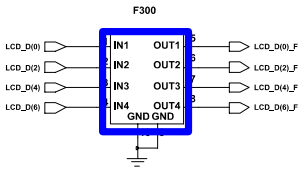

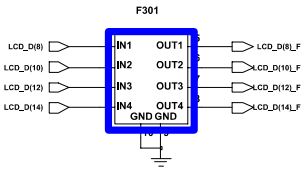

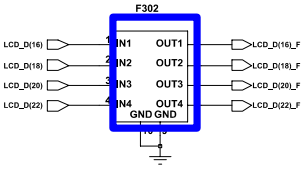

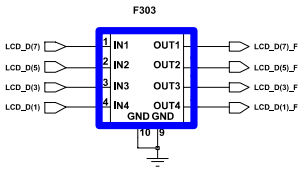

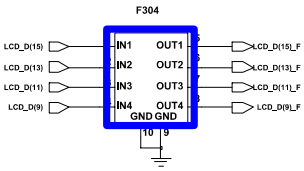

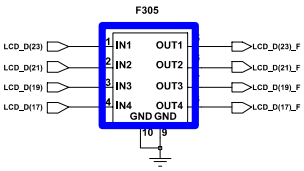

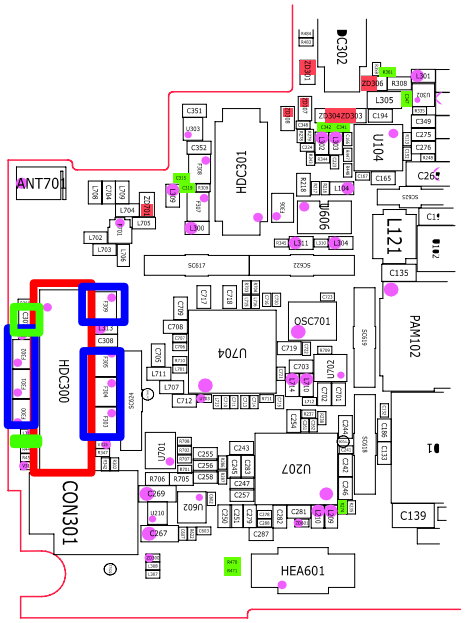

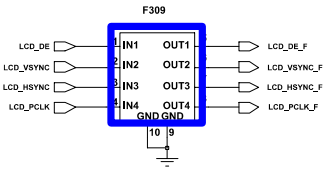

8-3-11. TSP

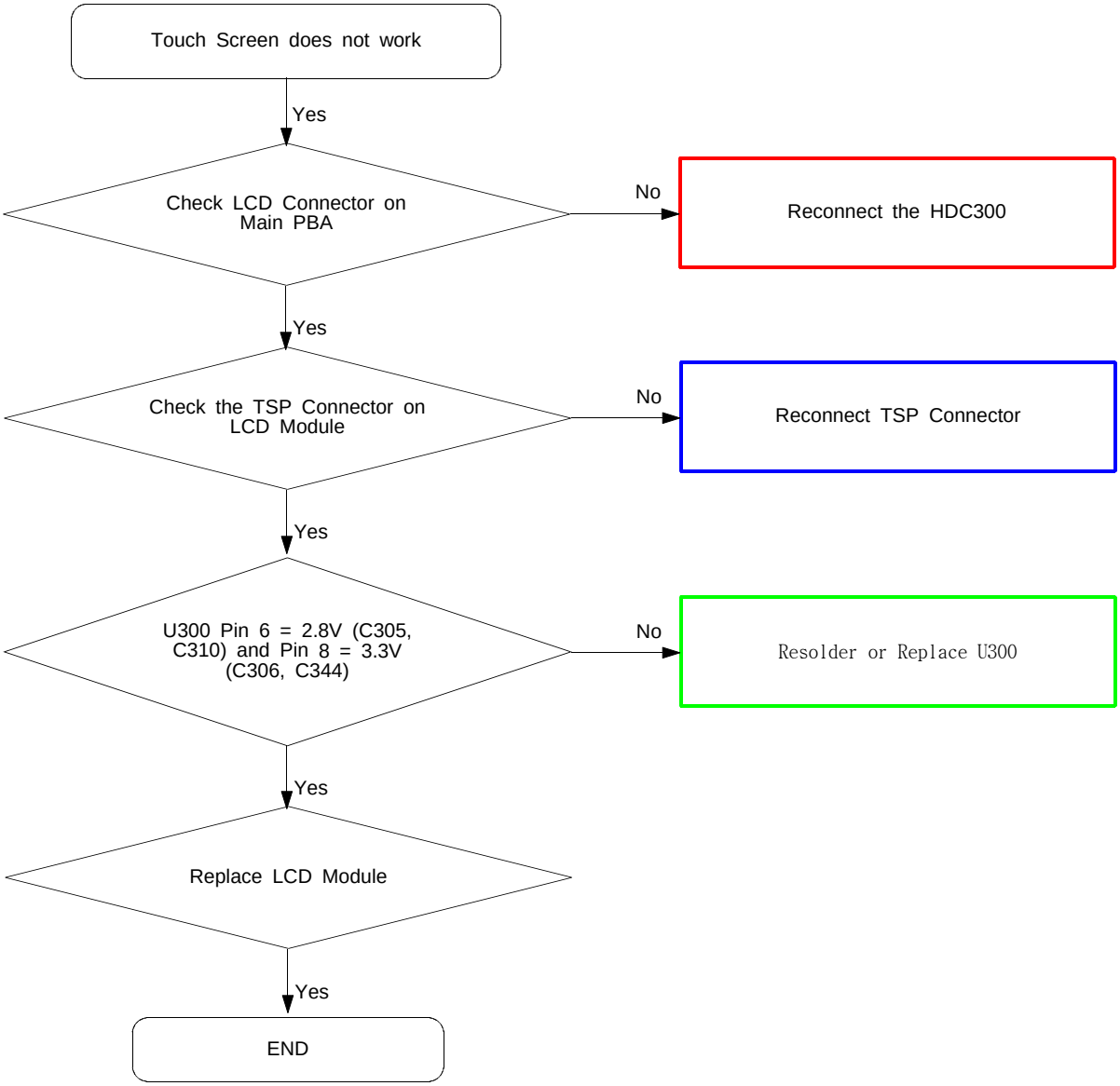

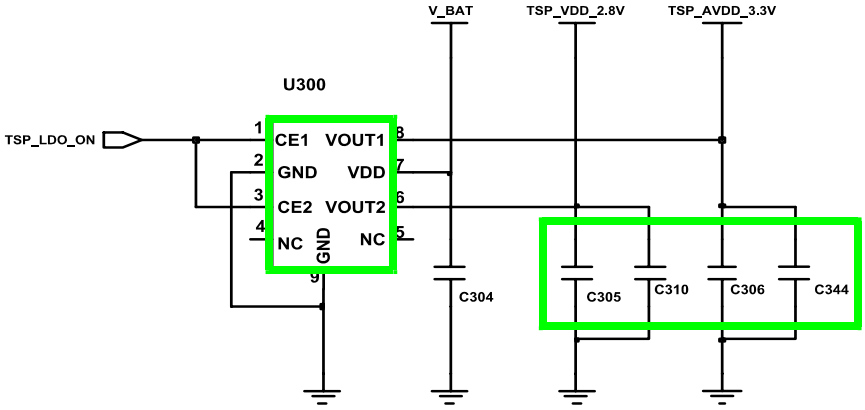

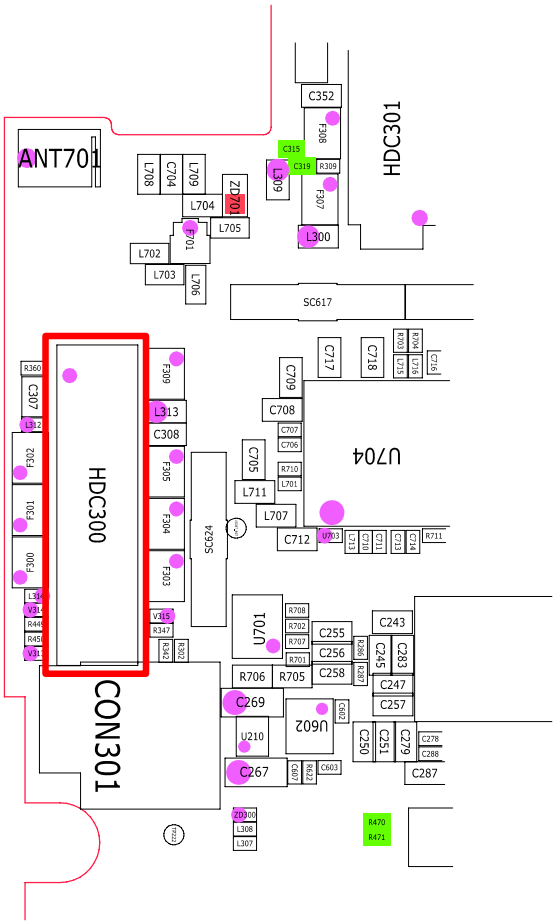

8-3-12. 5M CAM

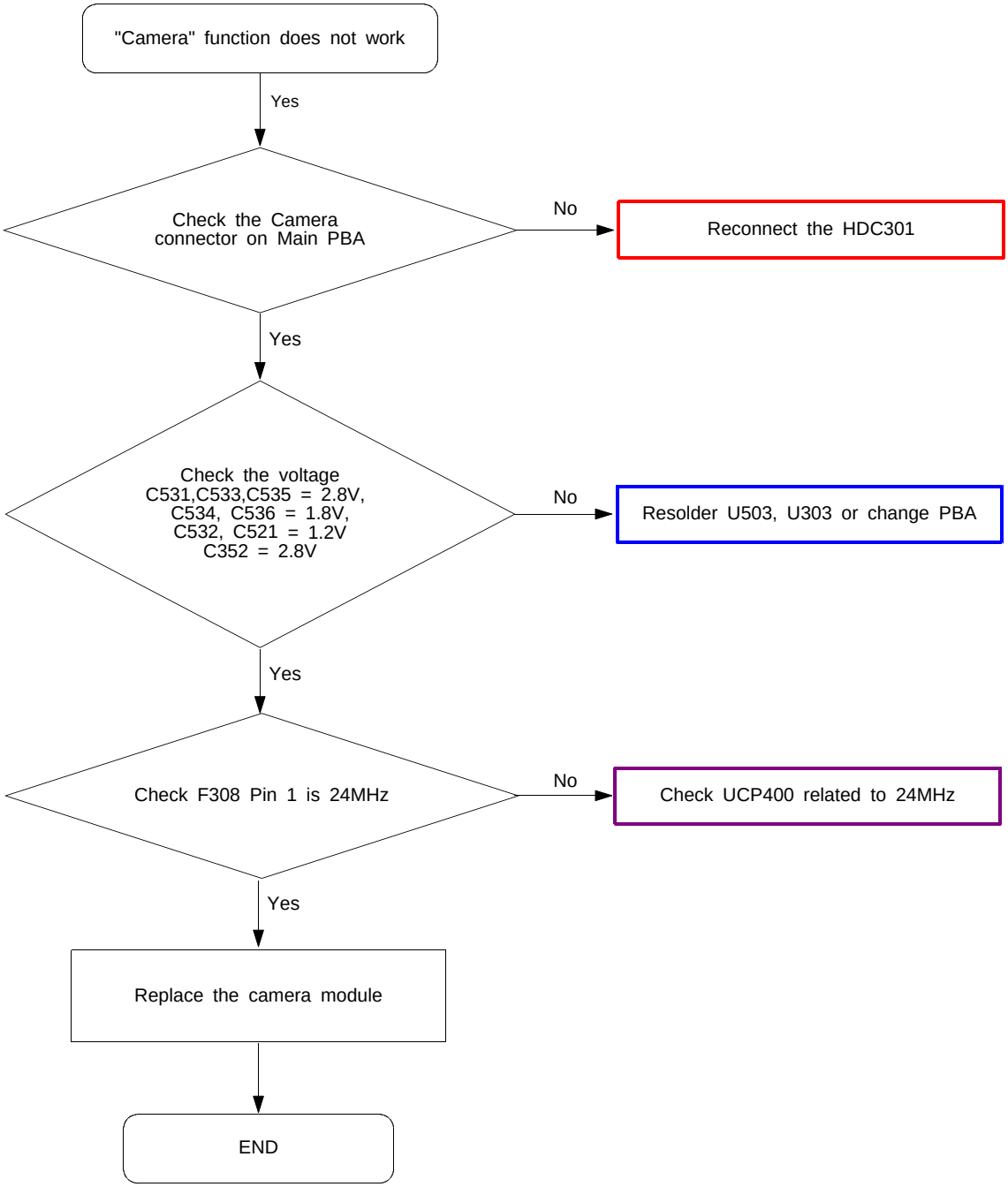

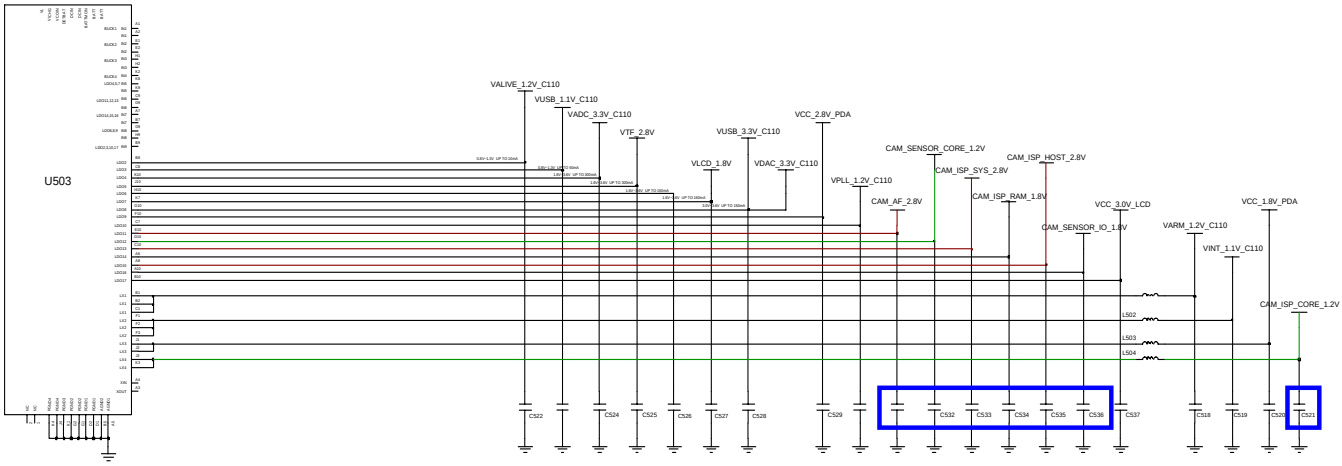

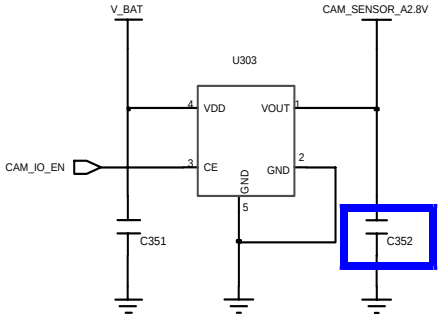

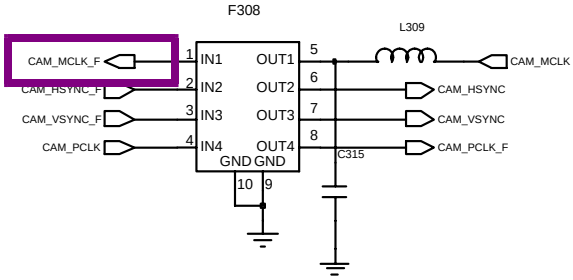

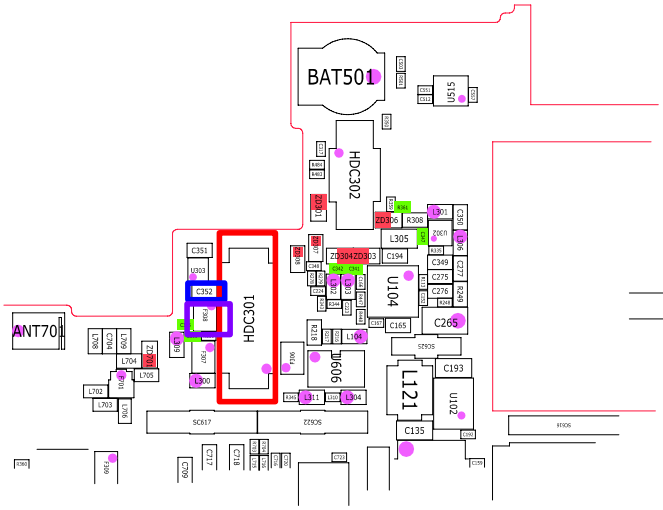

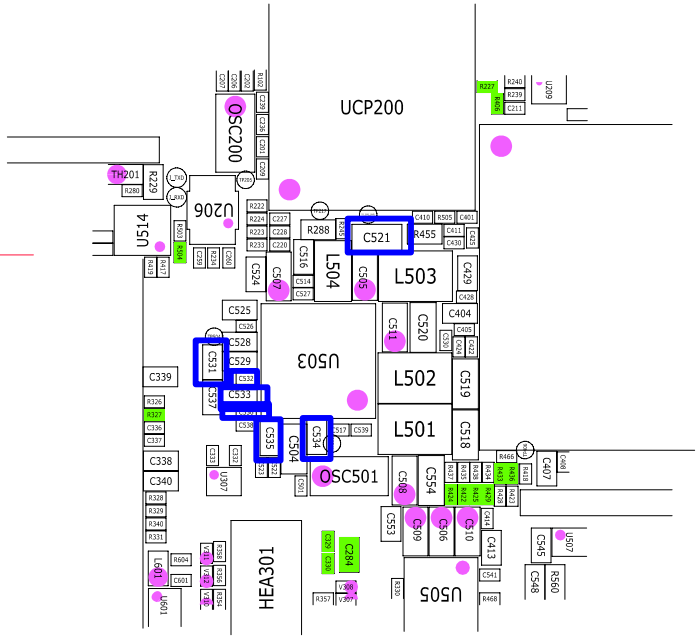

8-3-13. GSM900 RX

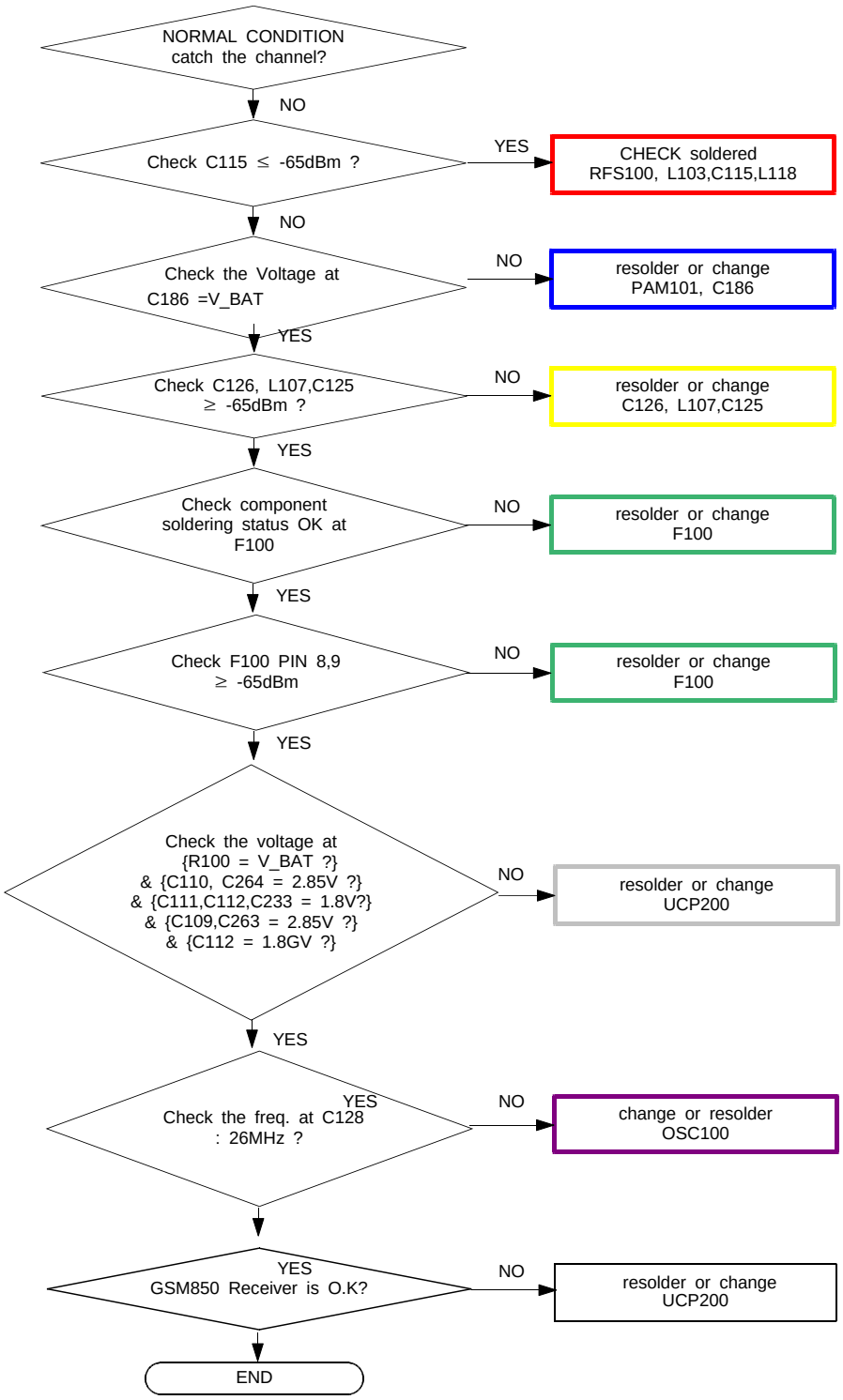

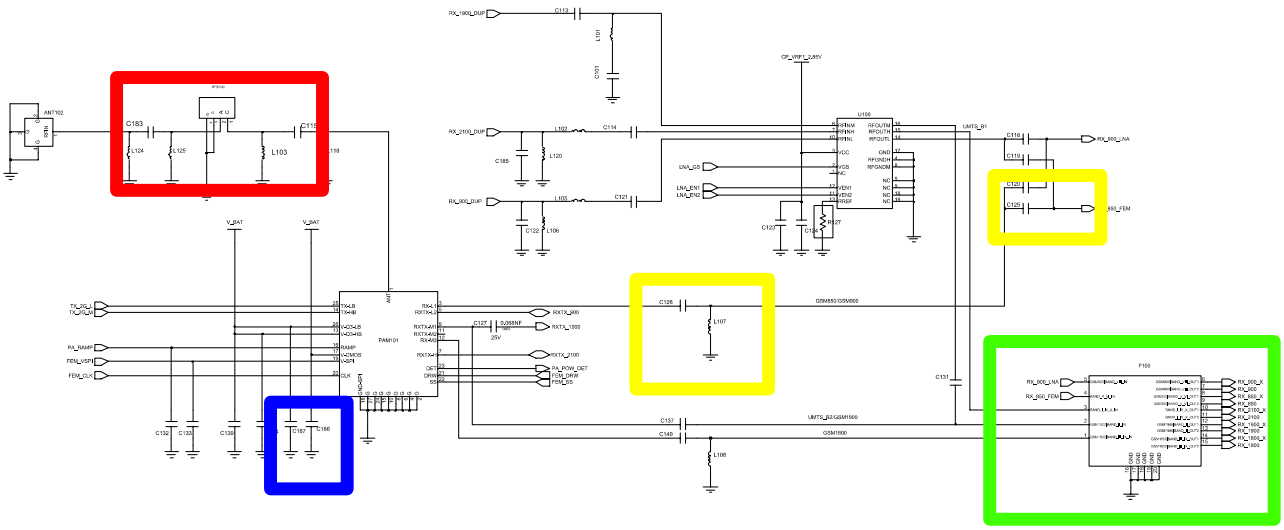

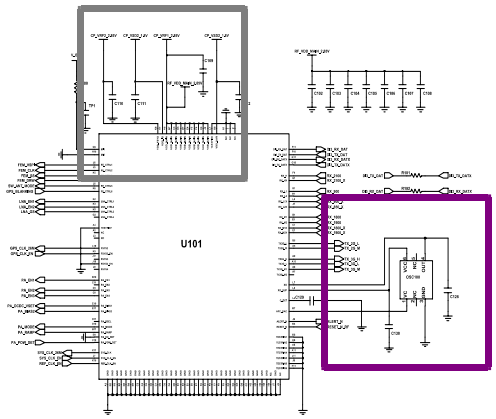

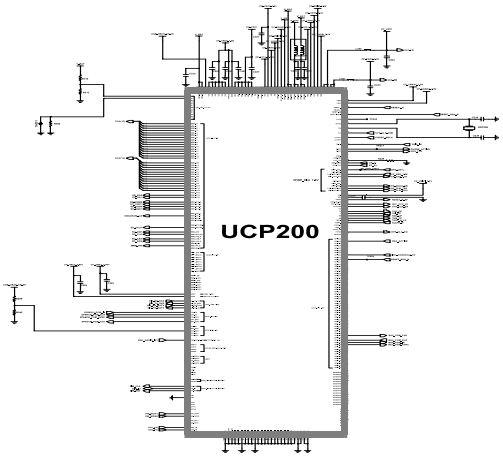

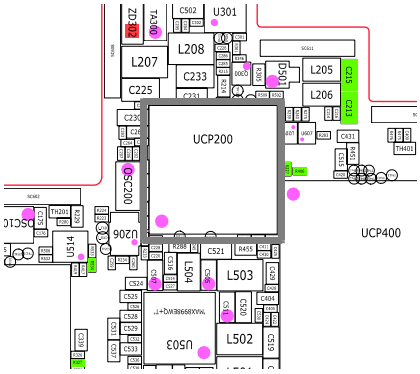

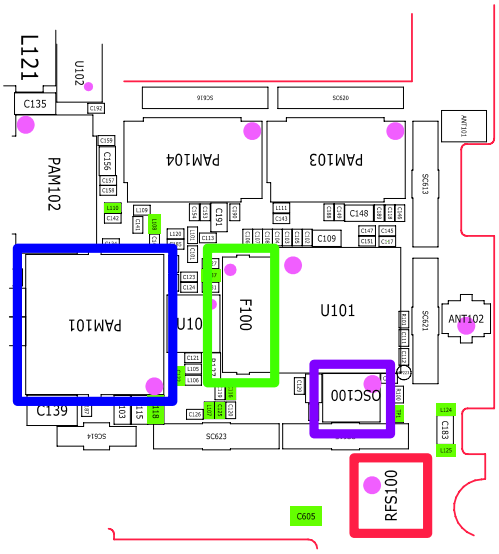

8-3-14. GSM1800 RX

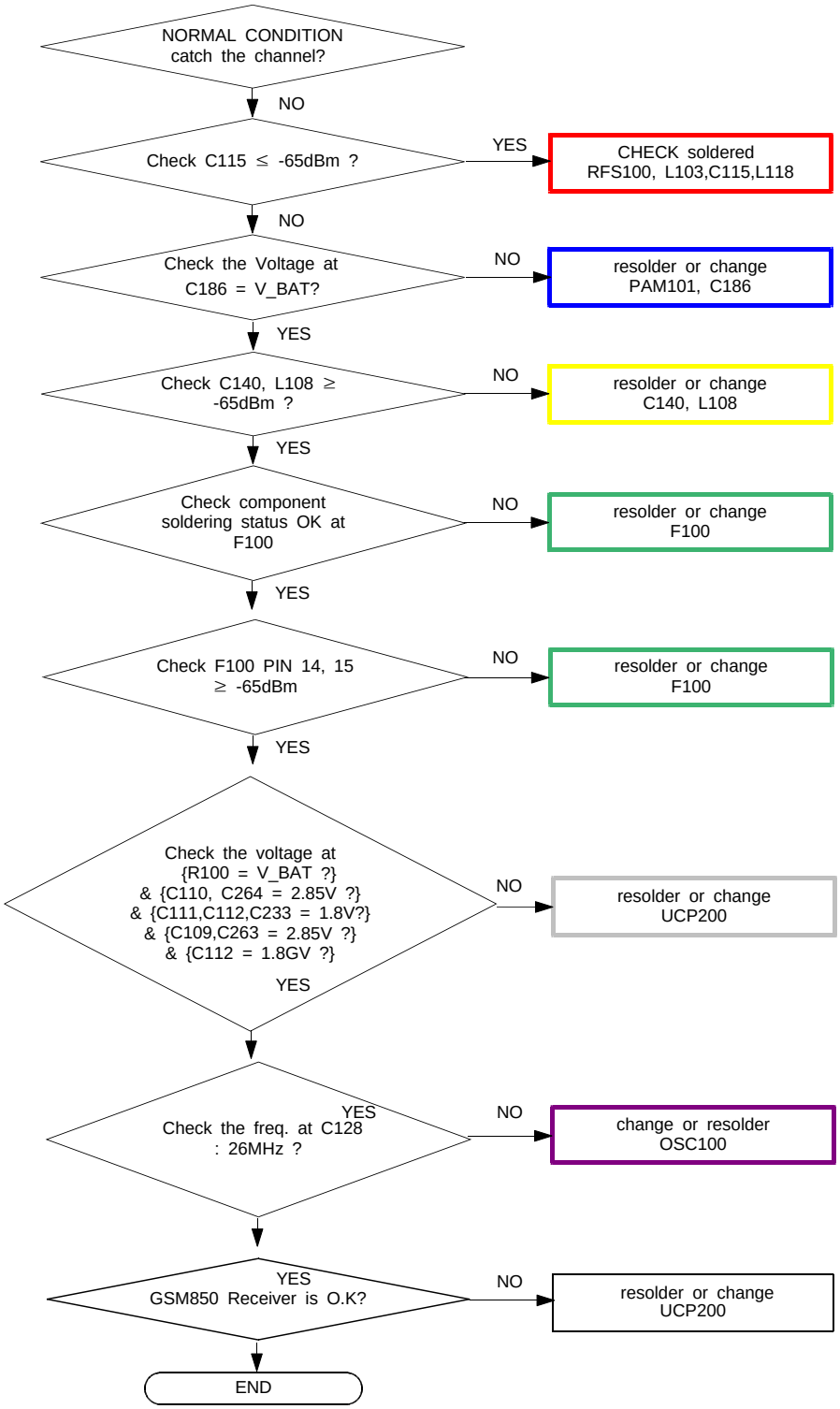

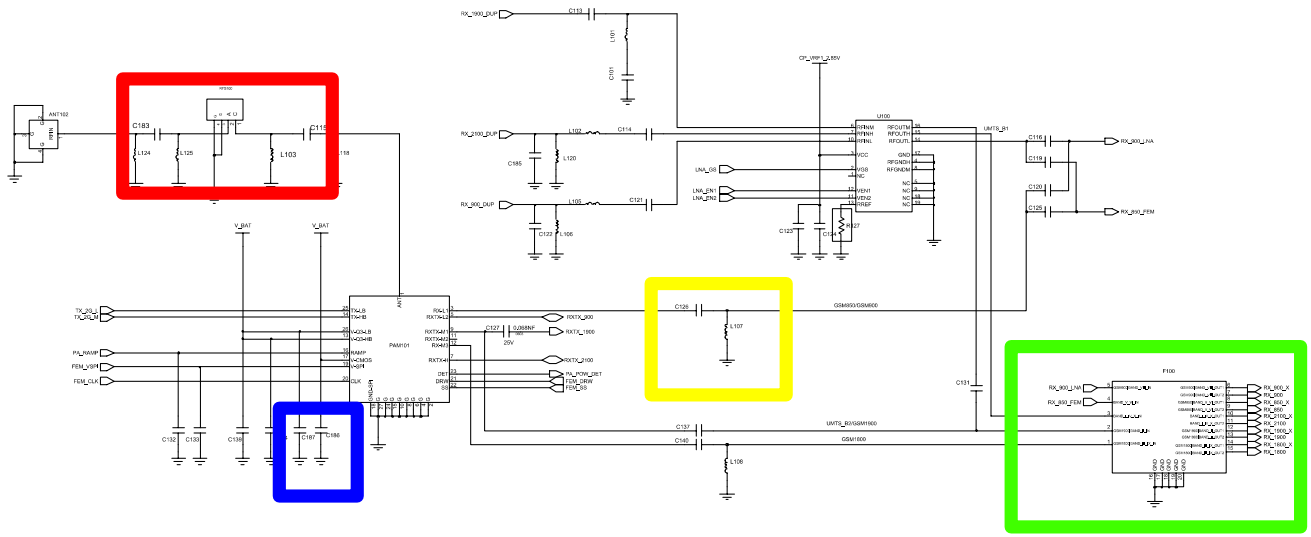

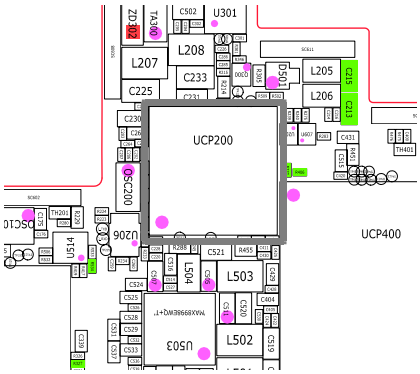

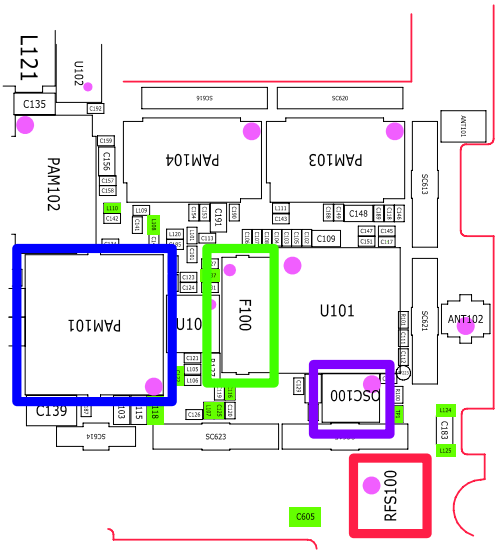

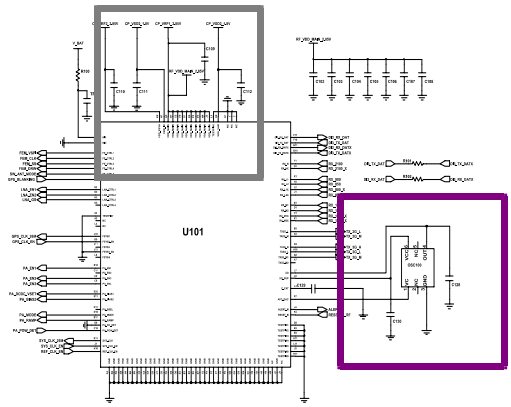

8-3-15. WCDMA Band1 RX

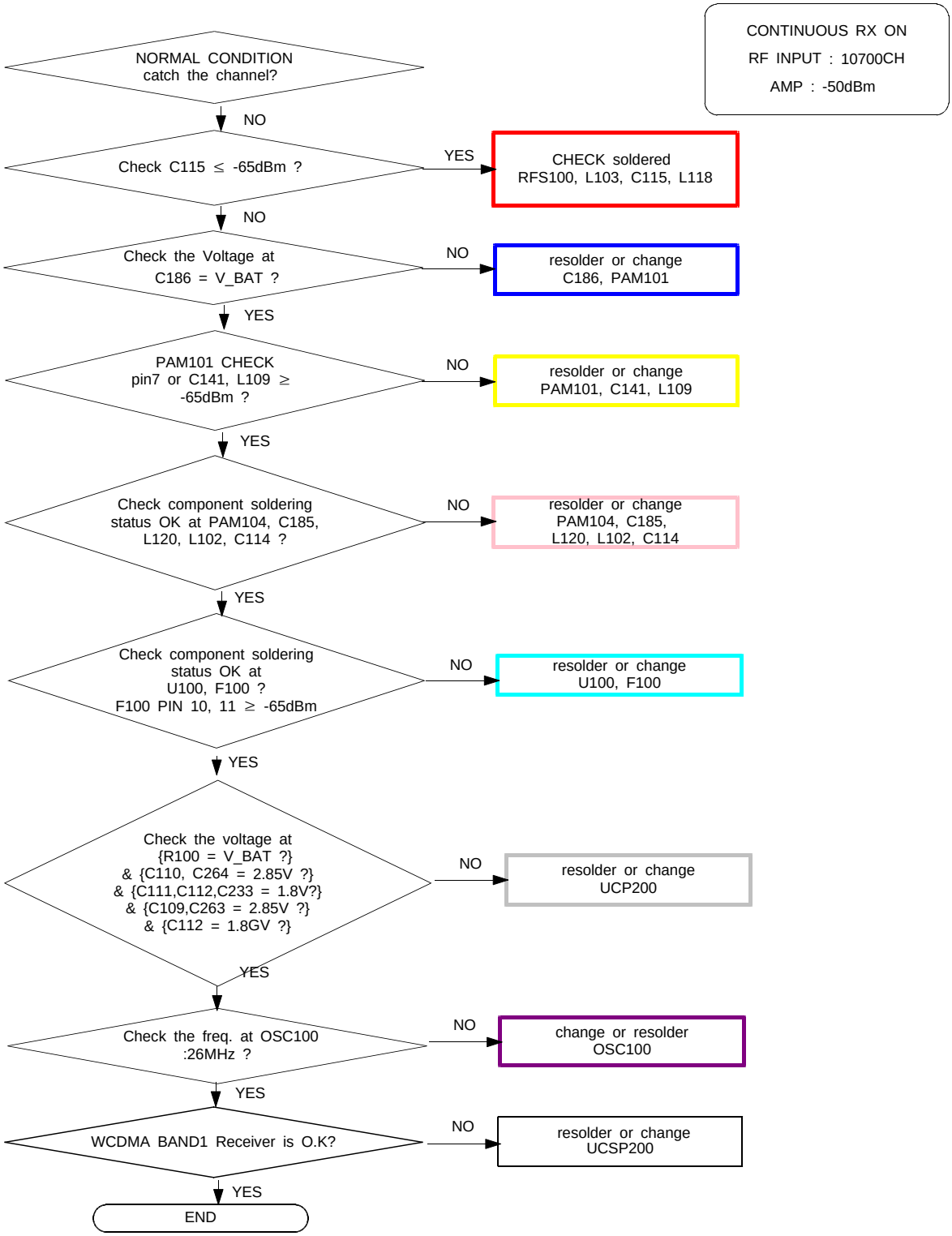

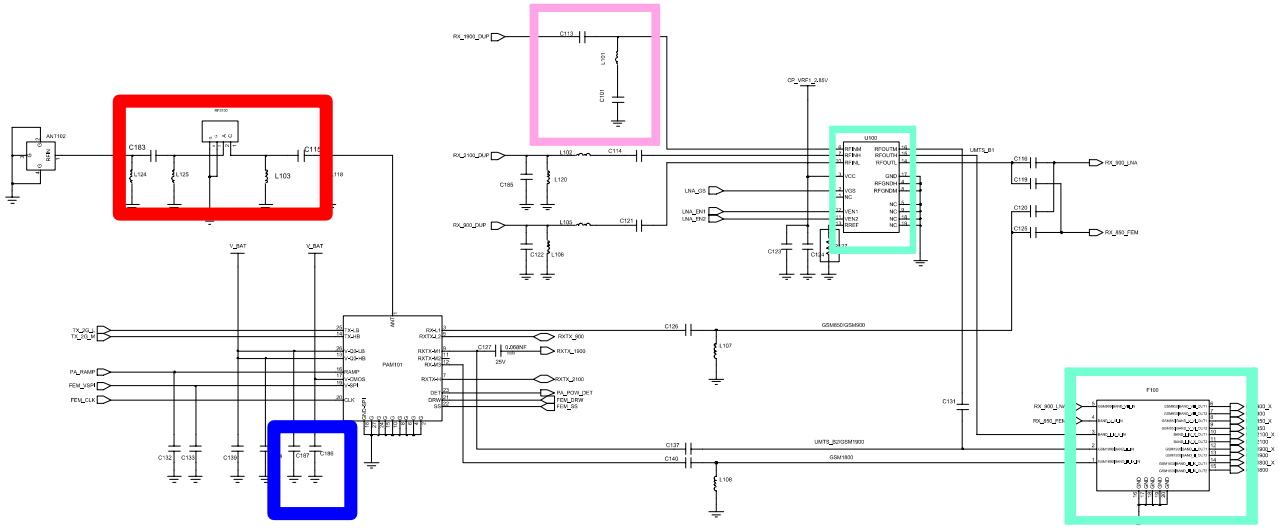

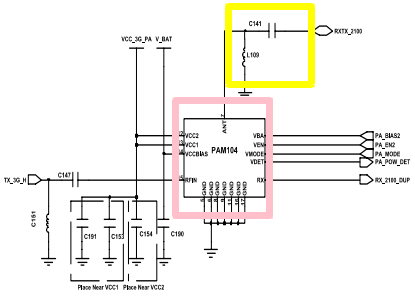

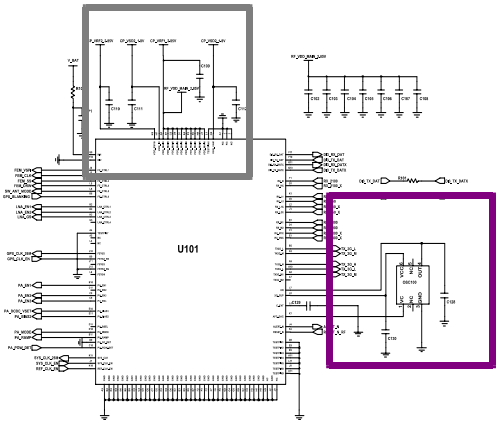

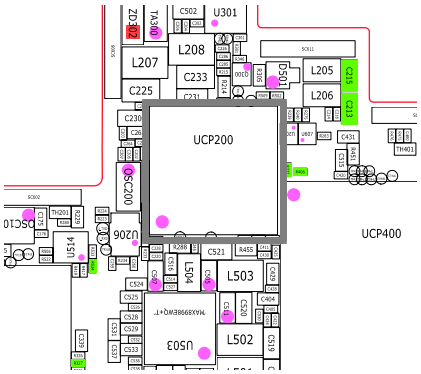

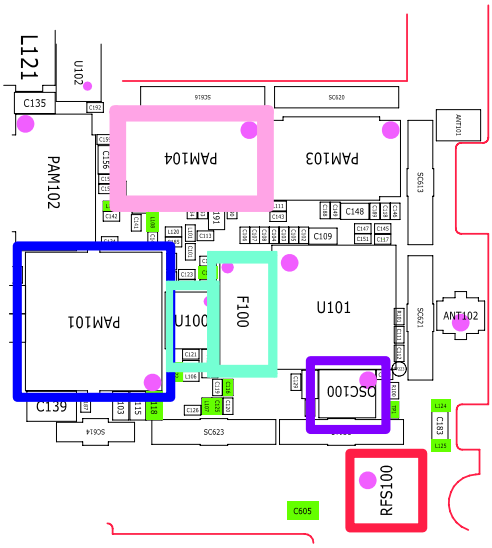

8-3-16. WCDMA Band2 / GSM1900 RX

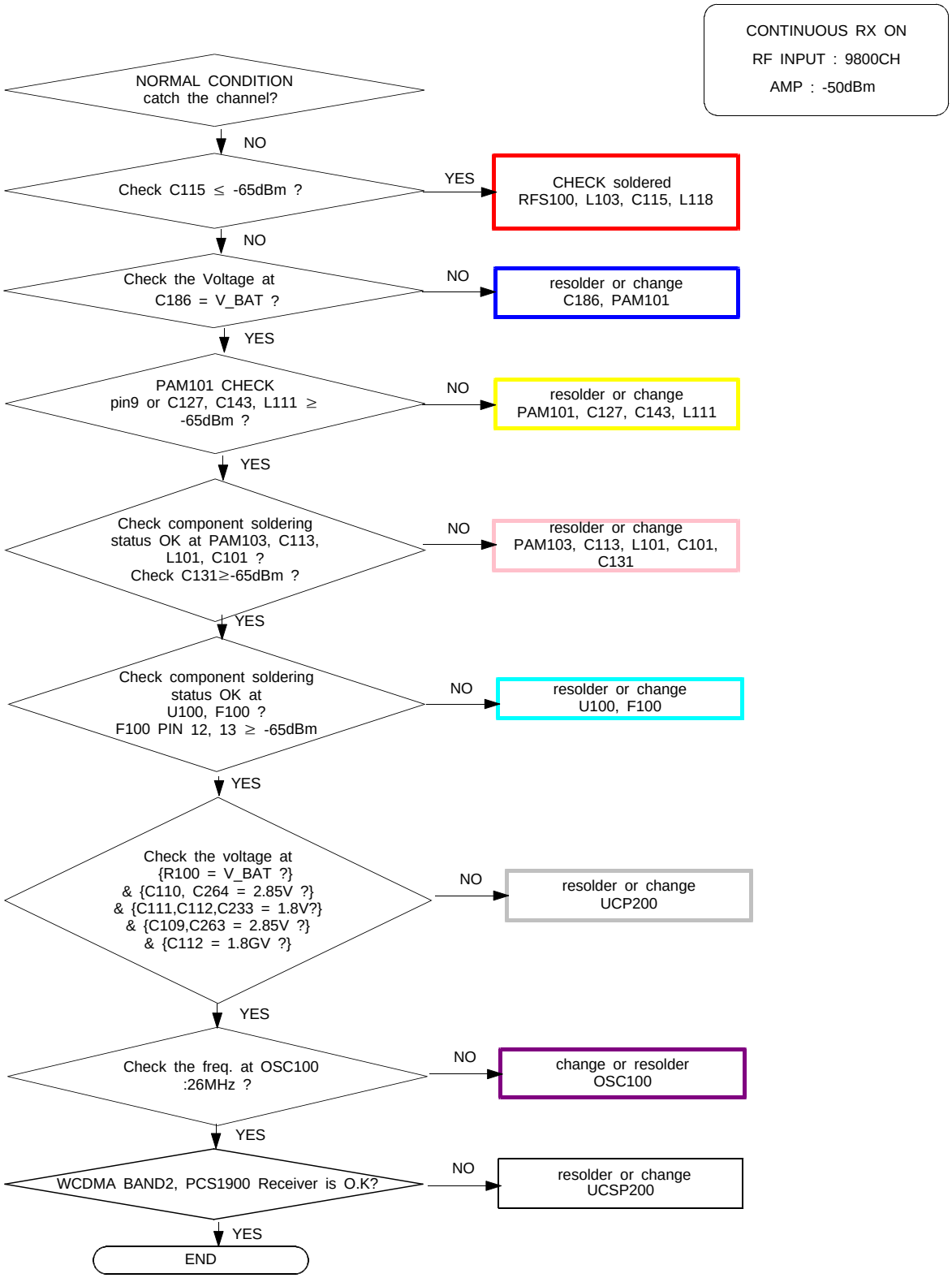

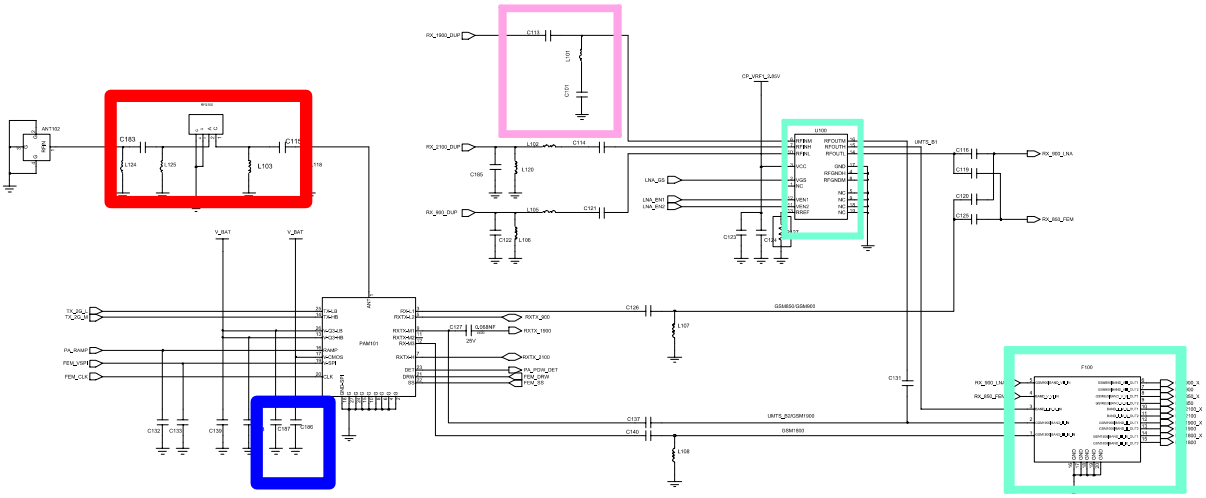

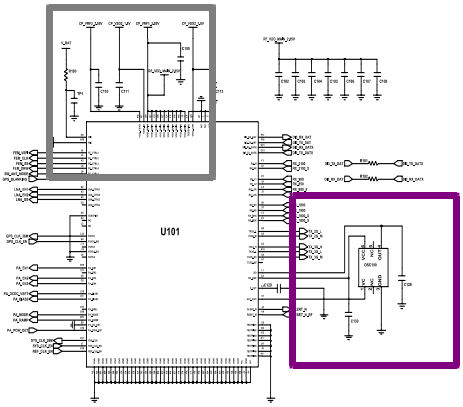

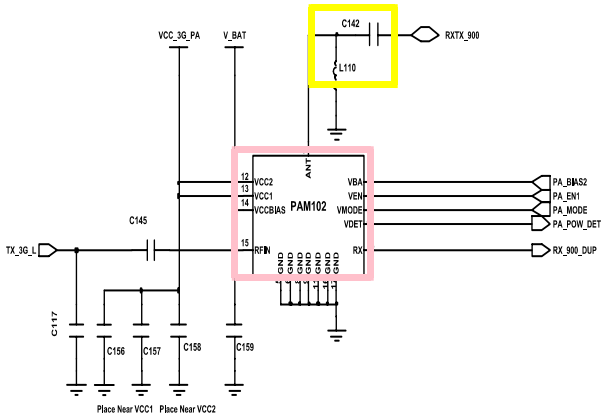

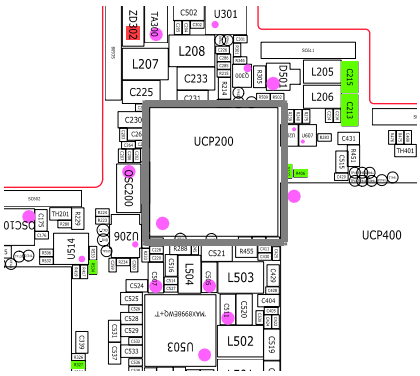

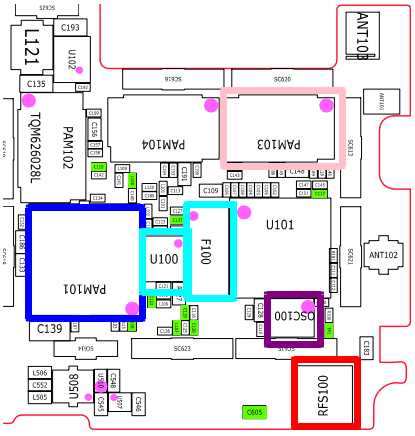

8-3-17. WCDMA Band5 / GSM850 RX

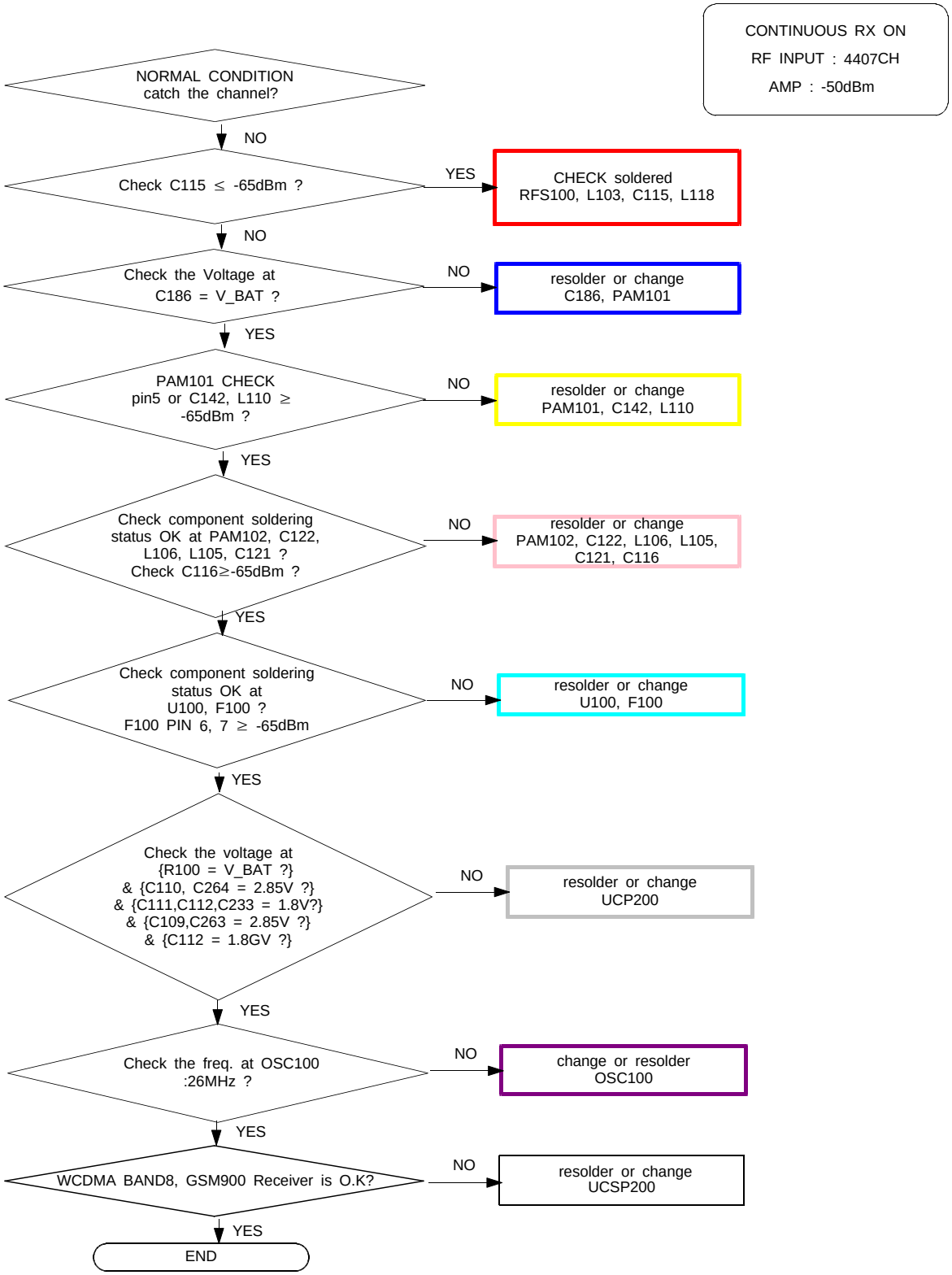

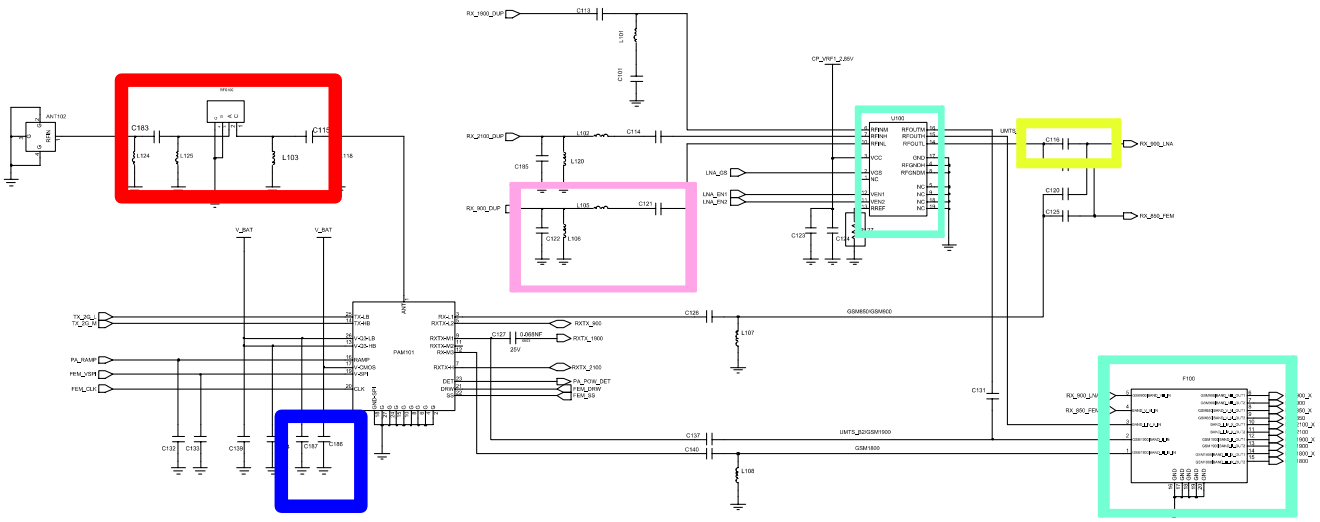

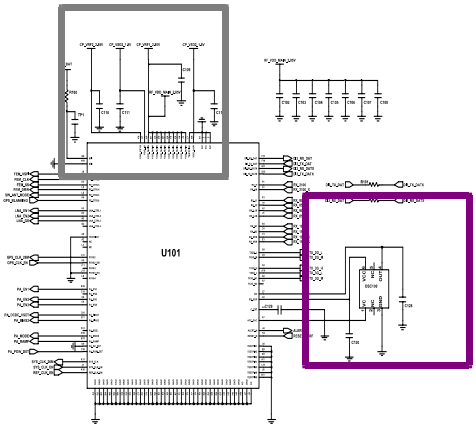

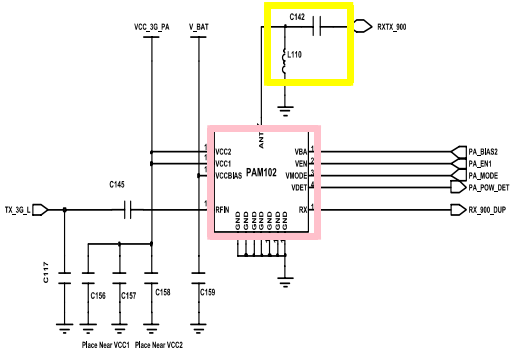

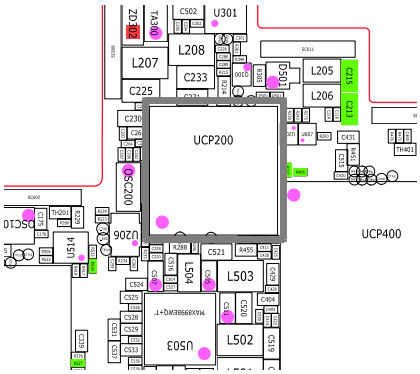

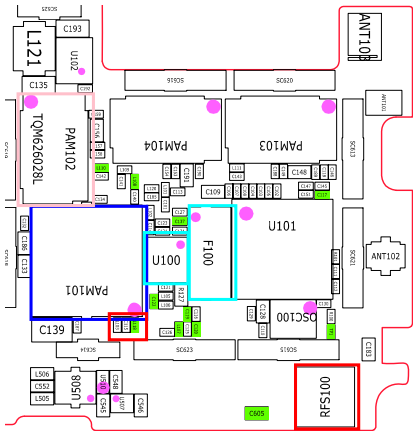

8-3-18. GSM850/GSM900 TX

CONTINOUS TX ON CONDITION
TX POWER DAC:14500 CODE APPLIED
GSM850 CH : 190
GSM900 CH : 62
RBW : 100KHz
VBW : 100KHz
SPAN : 10MHz
REF LEV. : 10dBm
ATT. : 20dB

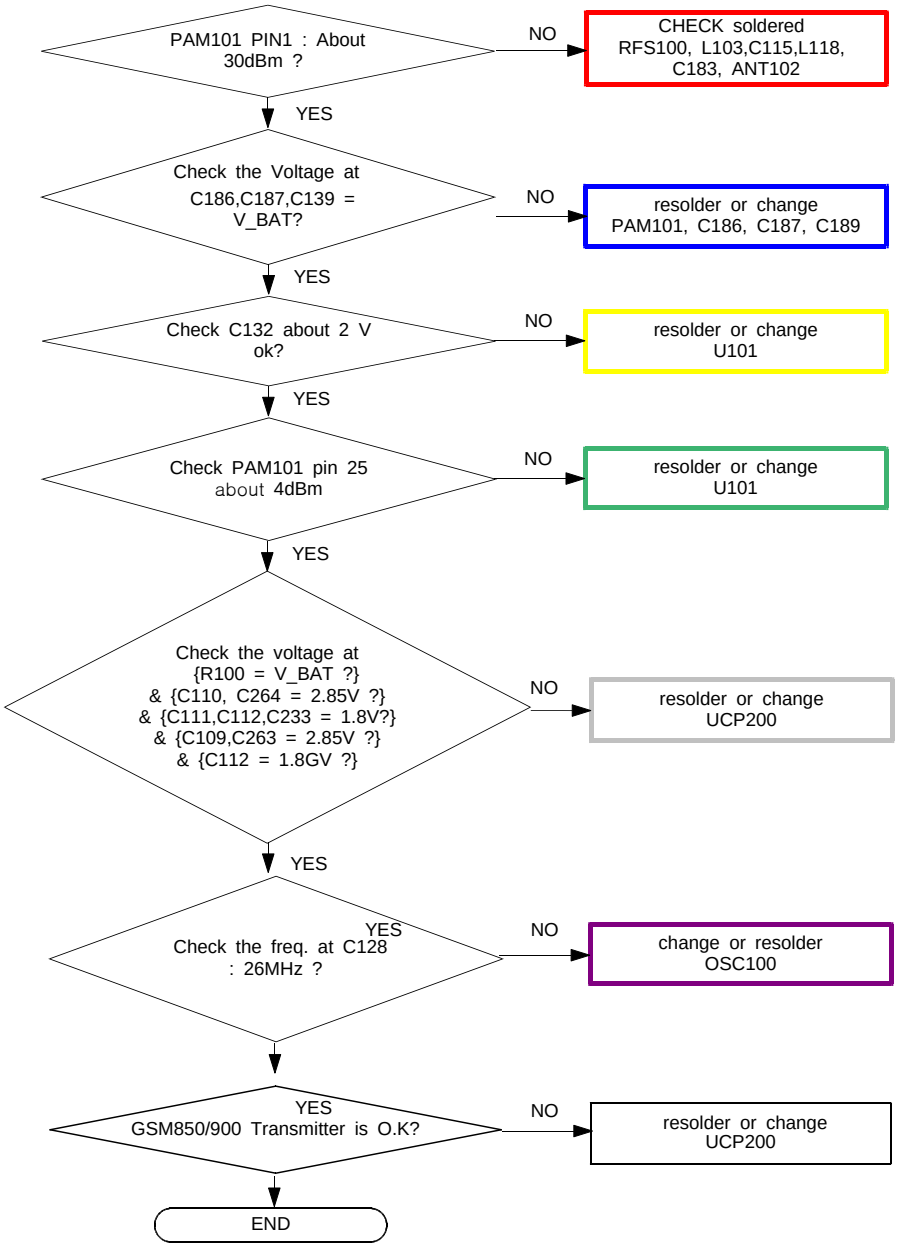

8-3-19. DCS/PCS TX

CONTINOUS TX ON CONDITION
TX POWER DAC:14500 CODE APPLIED
GSM850 CH : 190
GSM900 CH : 62
RBW : 100KHz
VBW : 100KHz
SPAN : 10MHz
REF LEV. : 10dBm
ATT. : 20dB

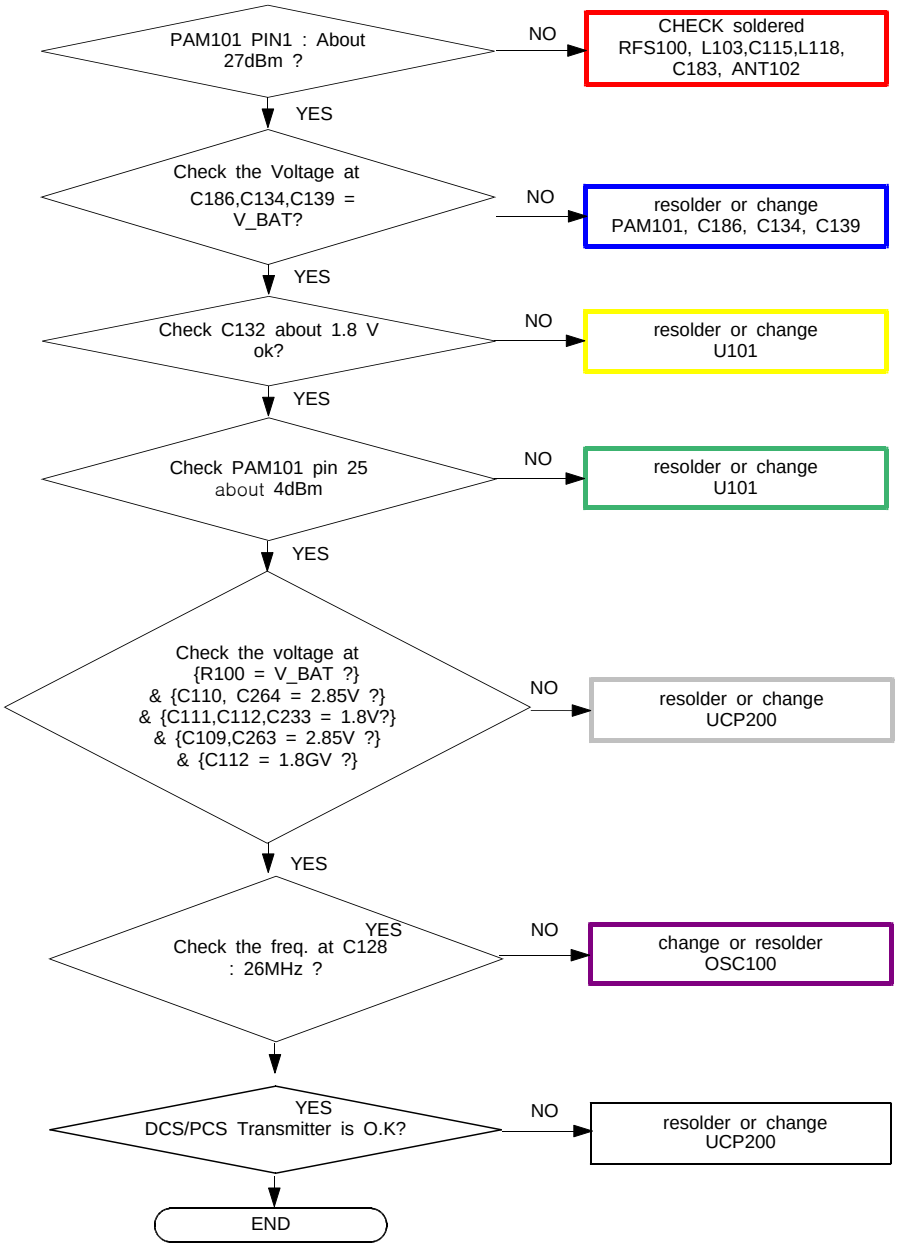

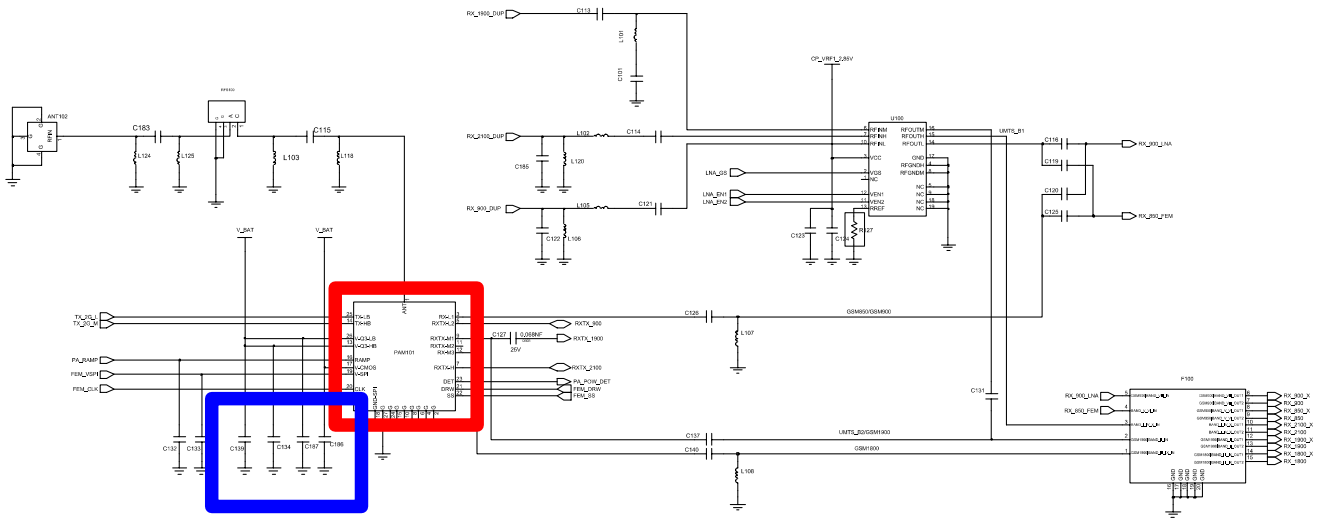

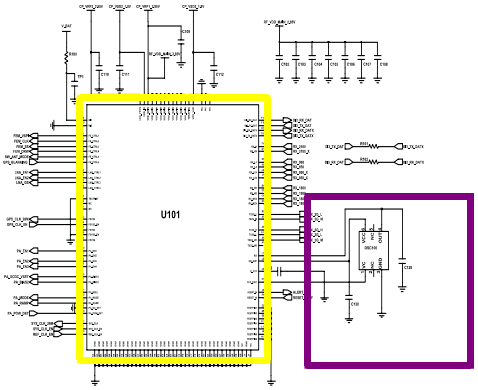

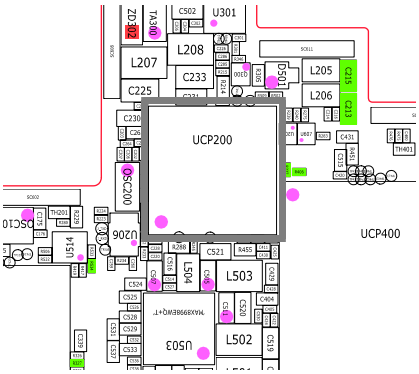

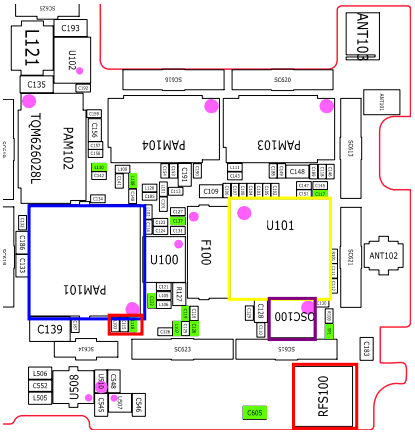

8-3-20. WCDMA BAND1 TX

CONTINOUS TX ON CONDITION
TX POWER DAC:14500 CODE APPLIED
GSM850 CH : 190
GSM900 CH : 62
RBW : 100KHz
VBW : 100KHz
SPAN : 10MHz
REF LEV. : 10dBm
ATT. : 20dB

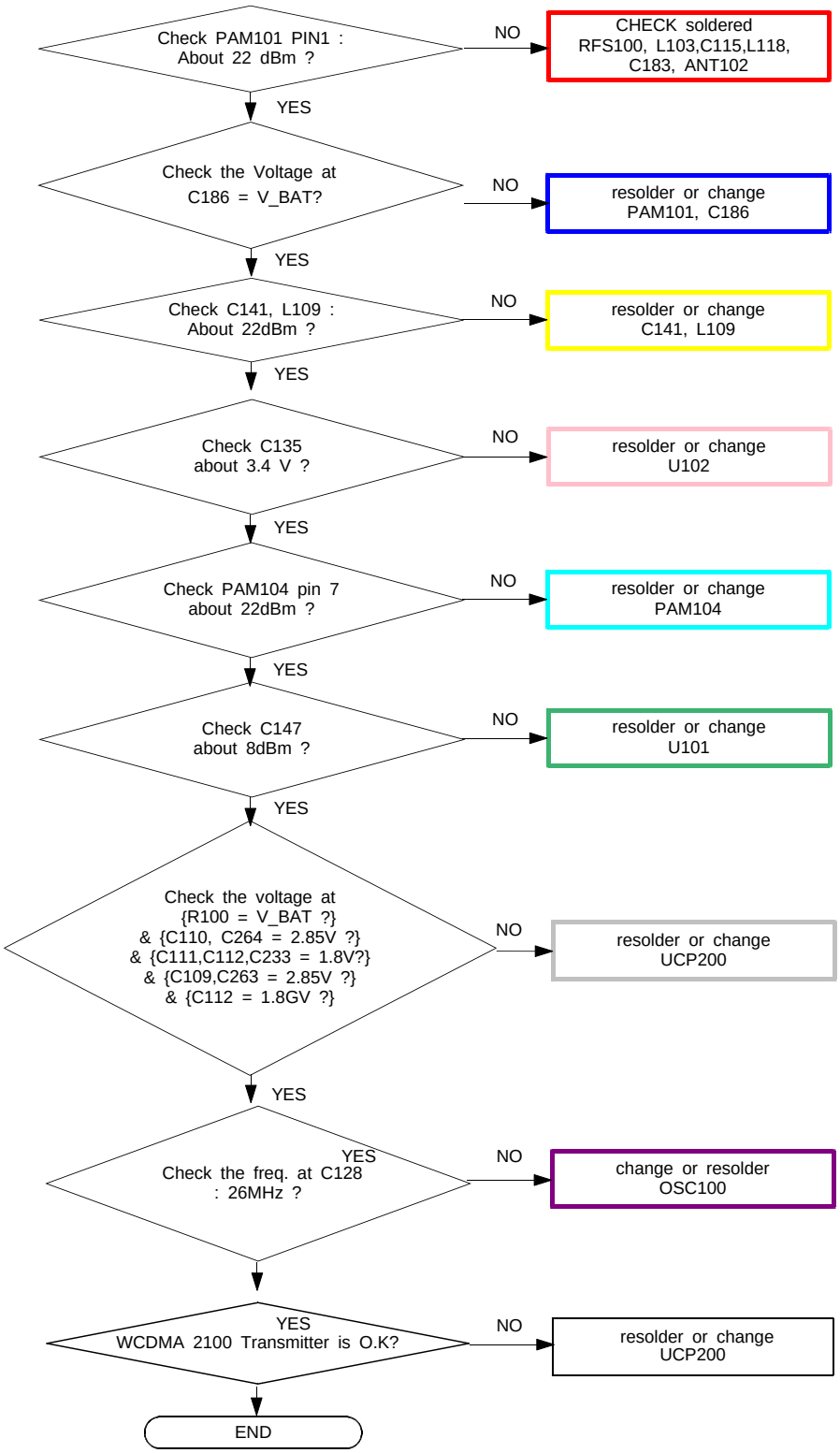

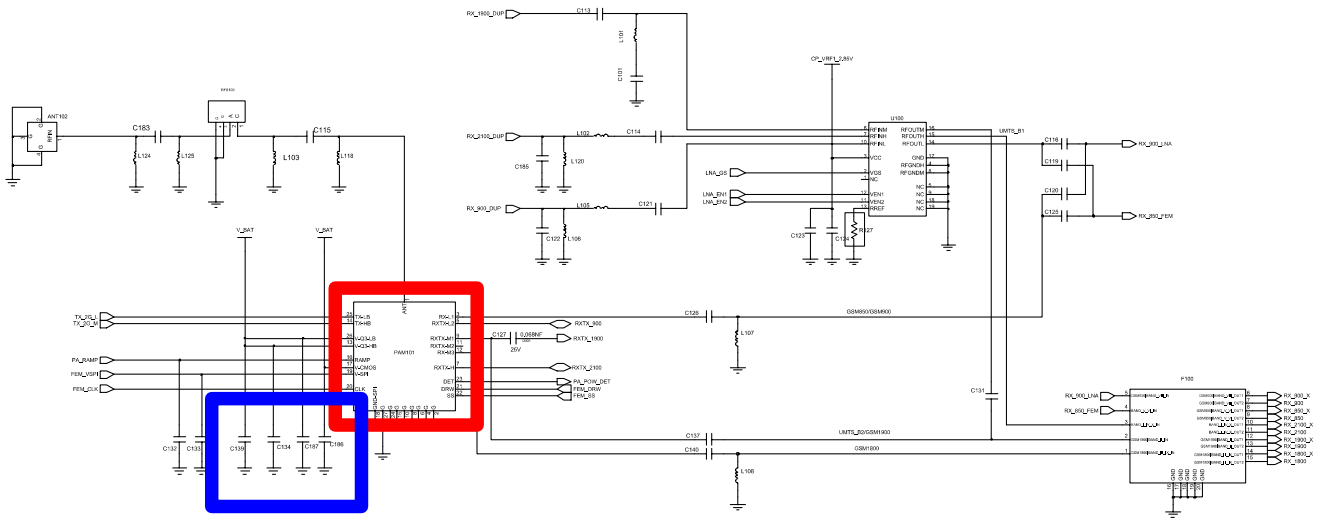

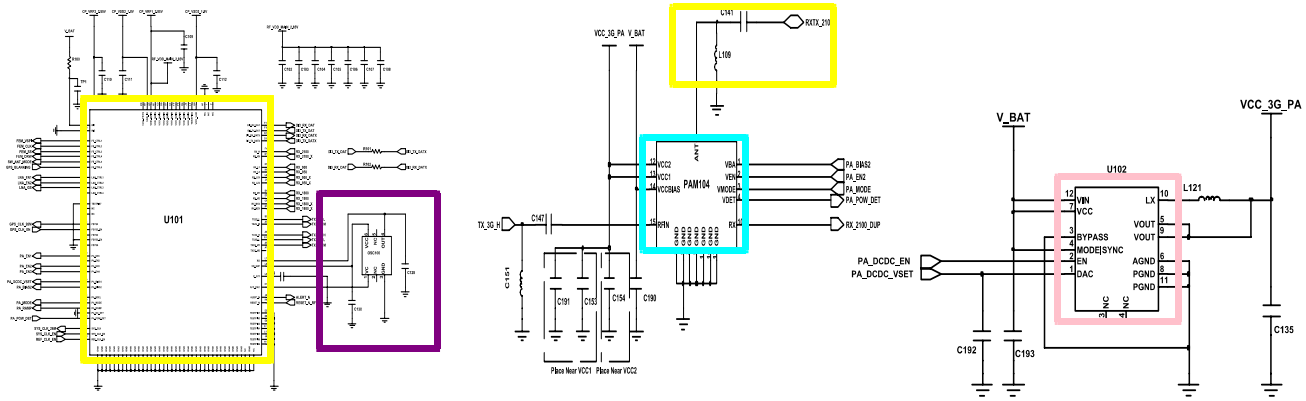

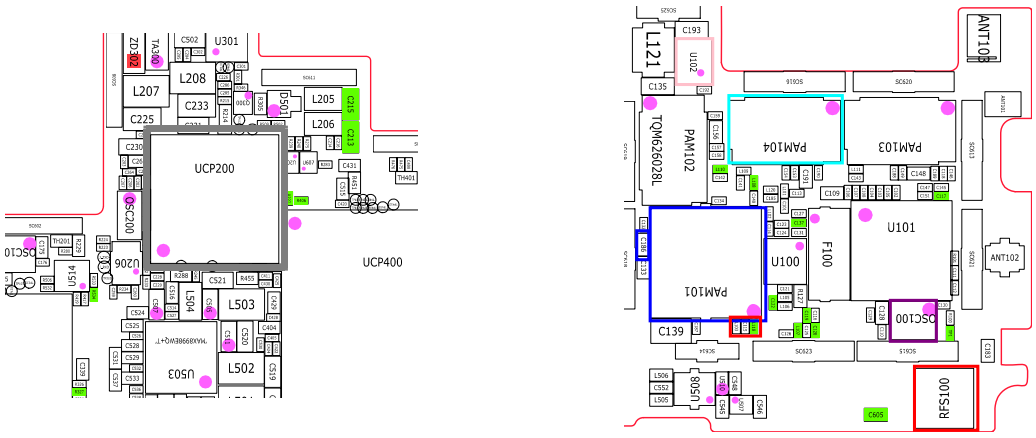

8-3-21. WCDMA BAND2 TX

CONTINOUS TX ON CONDITION
TX POWER DAC:14500 CODE APPLIED
GSM850 CH : 190
GSM900 CH : 62
RBW : 100KHz
VBW : 100KHz
SPAN : 10MHz
REF LEV. : 10dBm
ATT. : 20dB

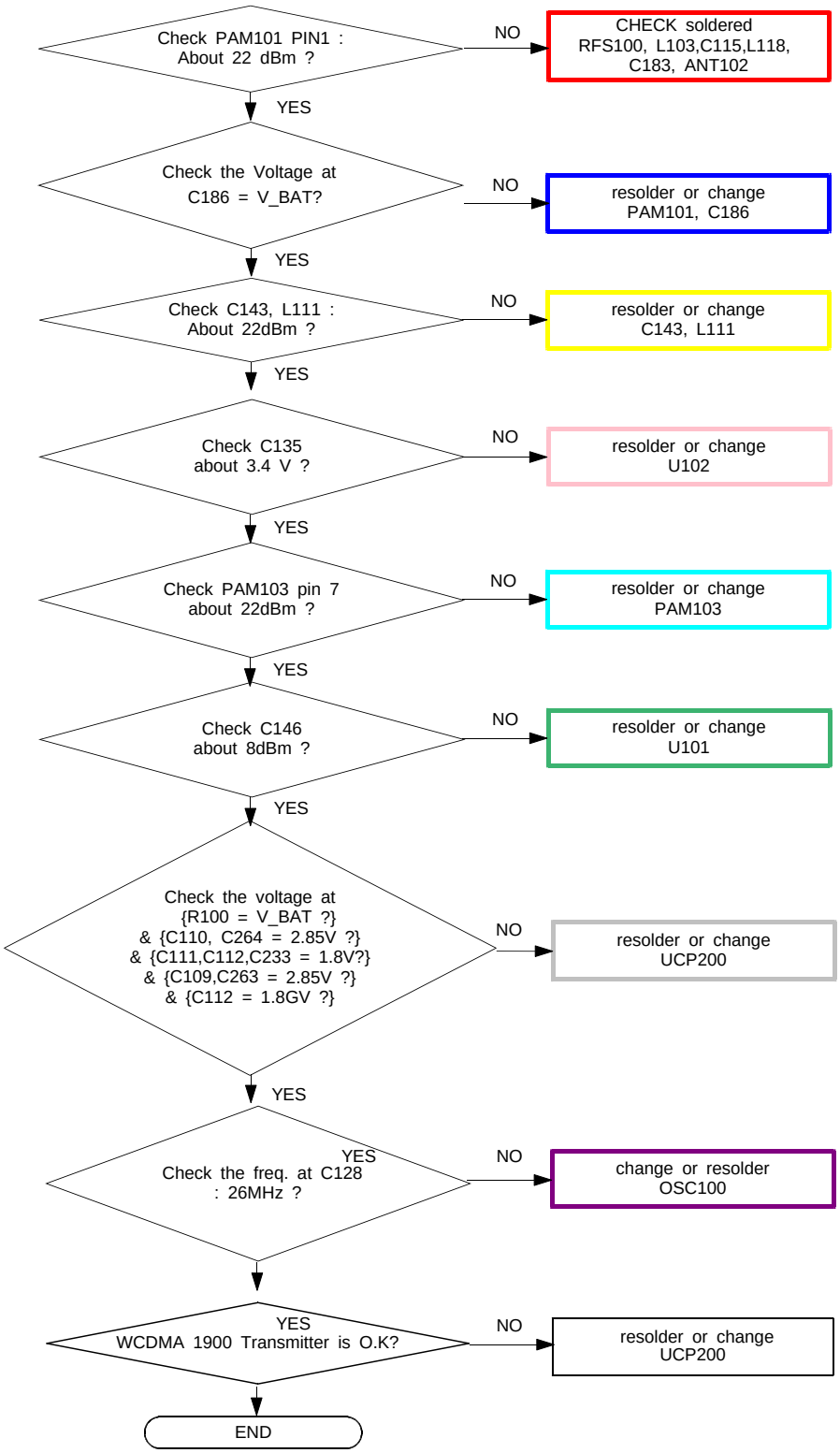

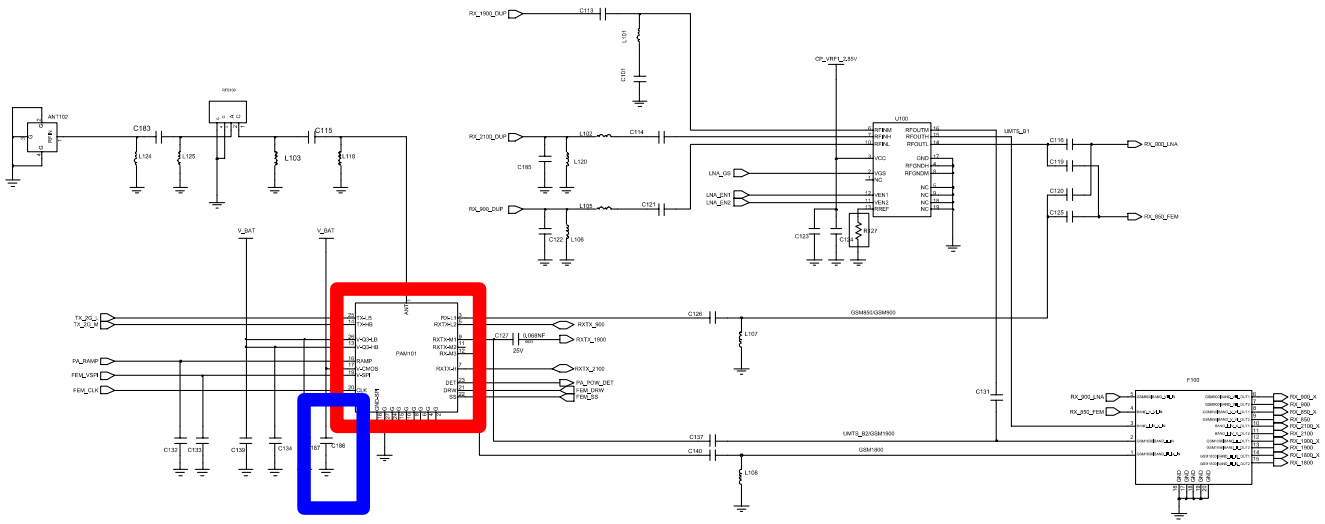

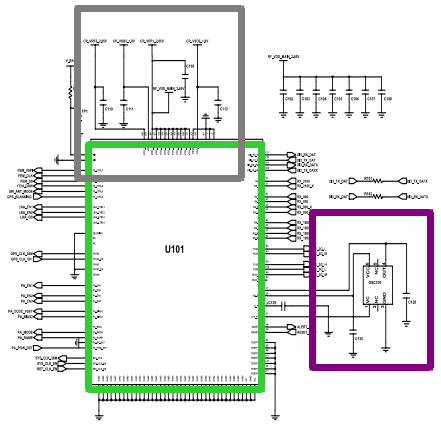

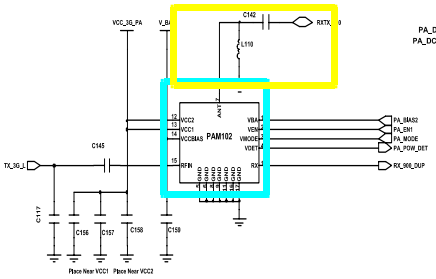

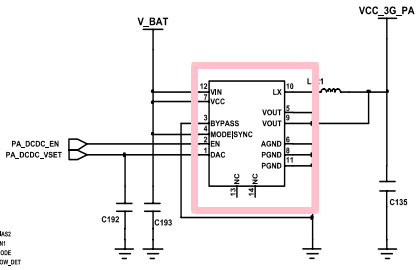

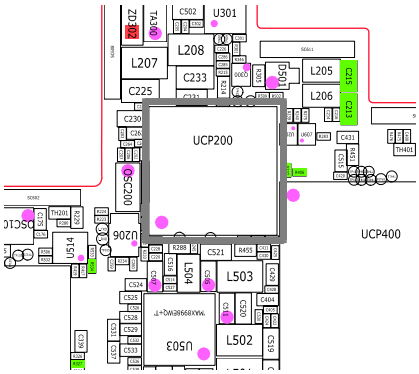

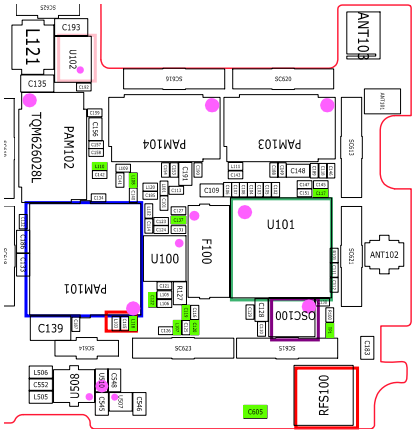

8-3-22. WCDMA BAND5 TX

CONTINOUS TX ON CONDITION
TX POWER DAC:14500 CODE APPLIED
GSM850 CH : 190
GSM900 CH : 62
RBW : 100KHz
VBW : 100KHz
SPAN : 10MHz
REF LEV. : 10dBm
ATT. : 20dB

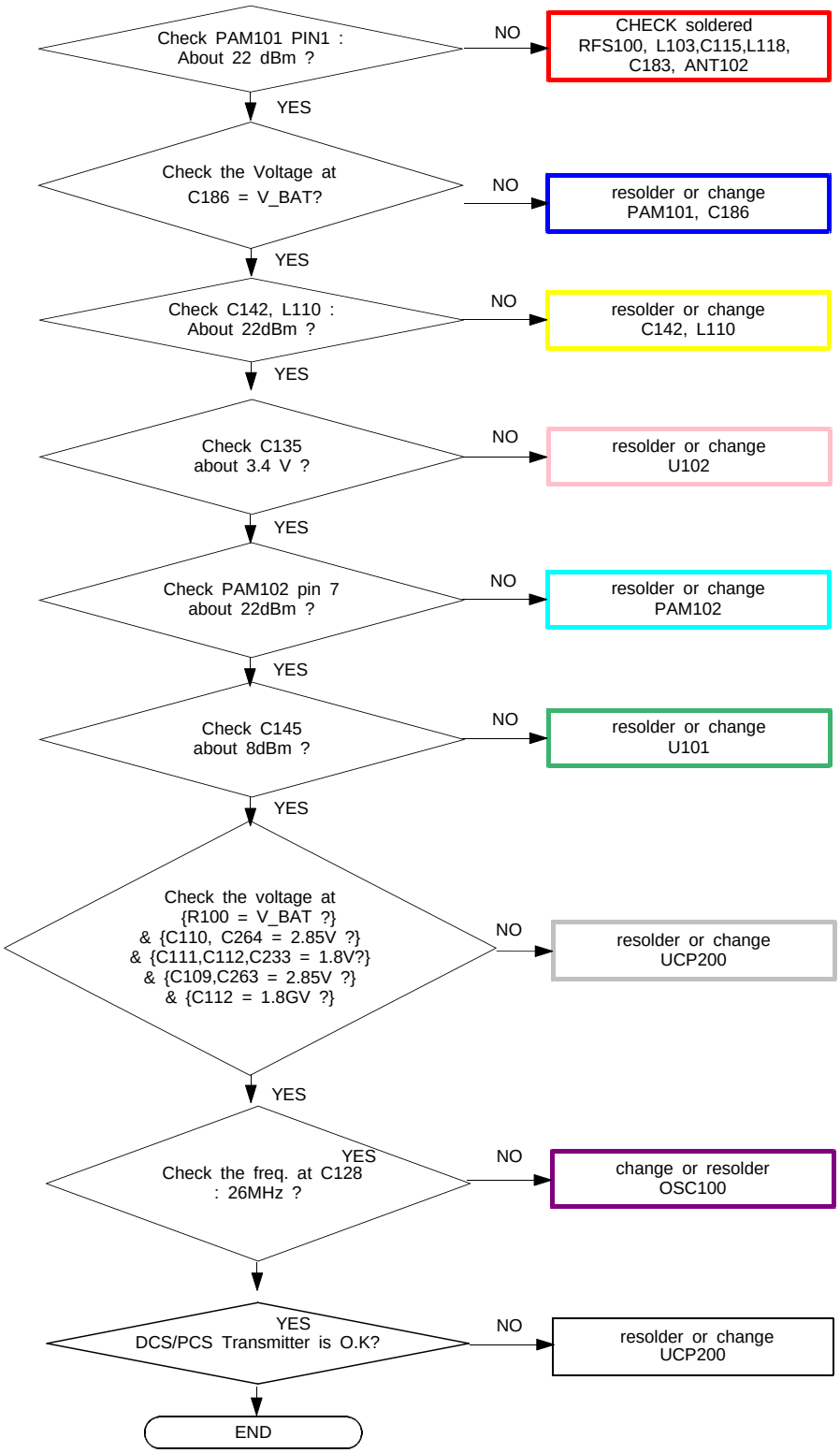

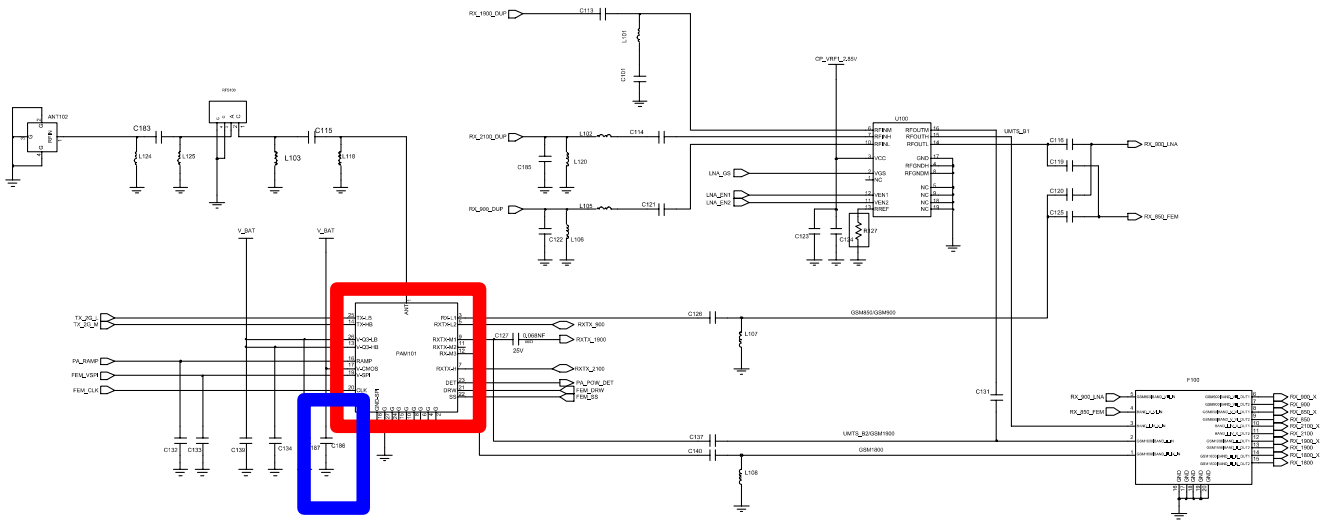

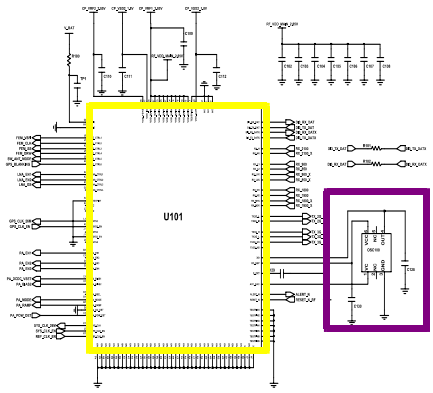

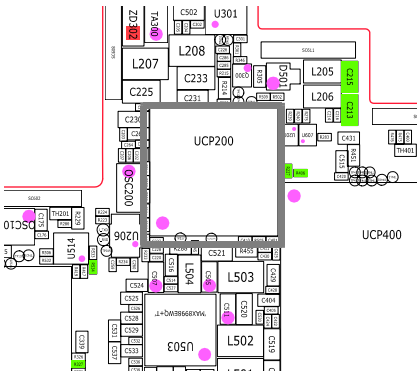

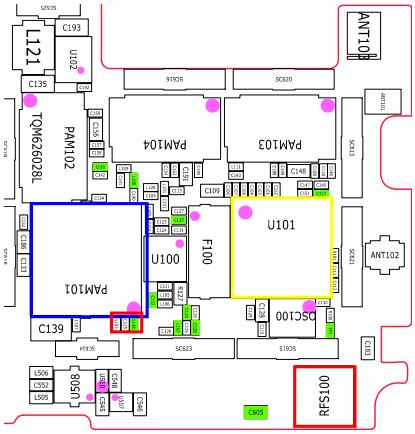

8-3-23. ISDB-T

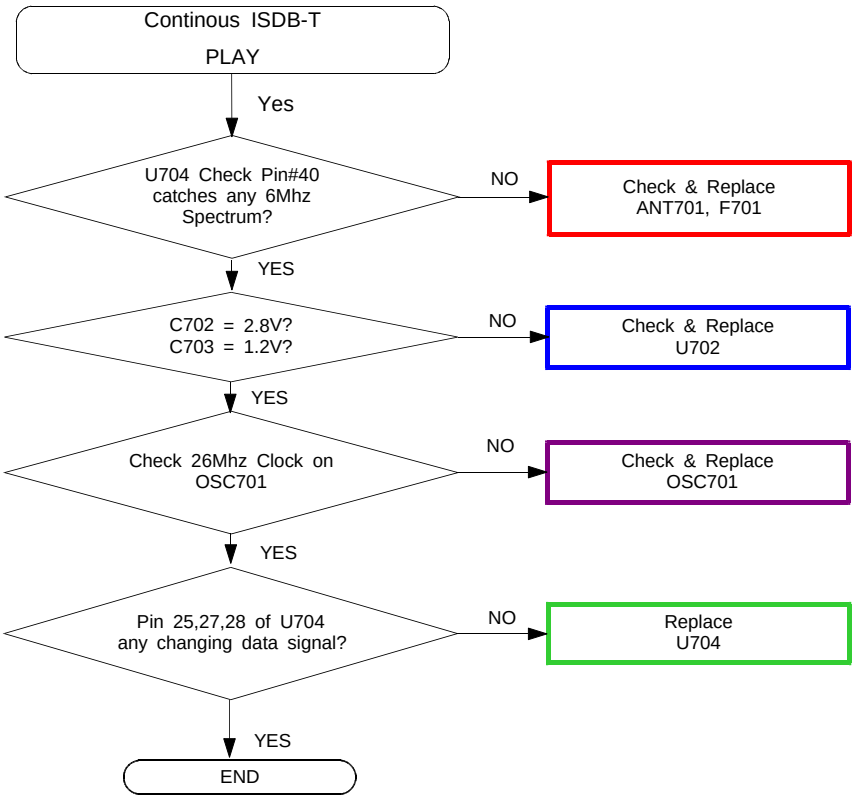

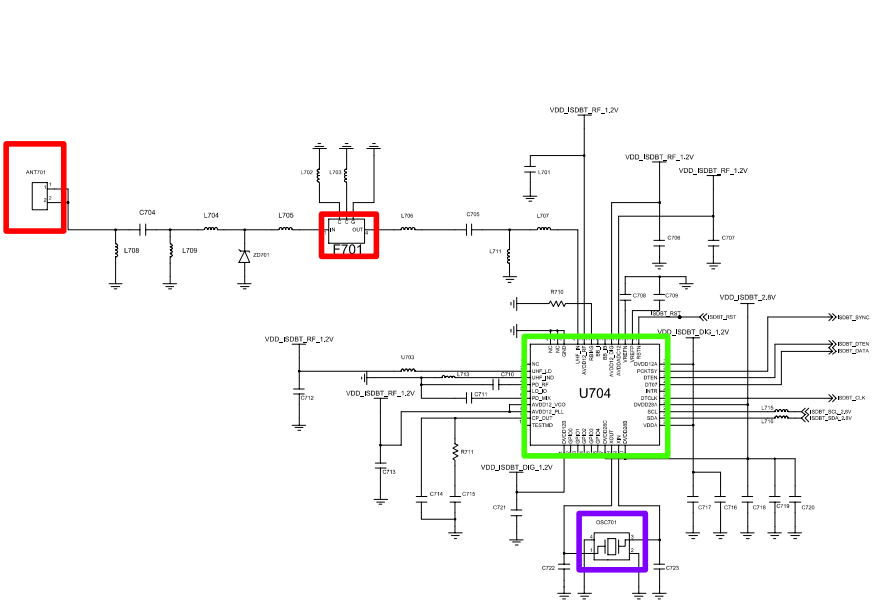

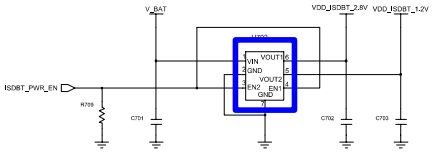

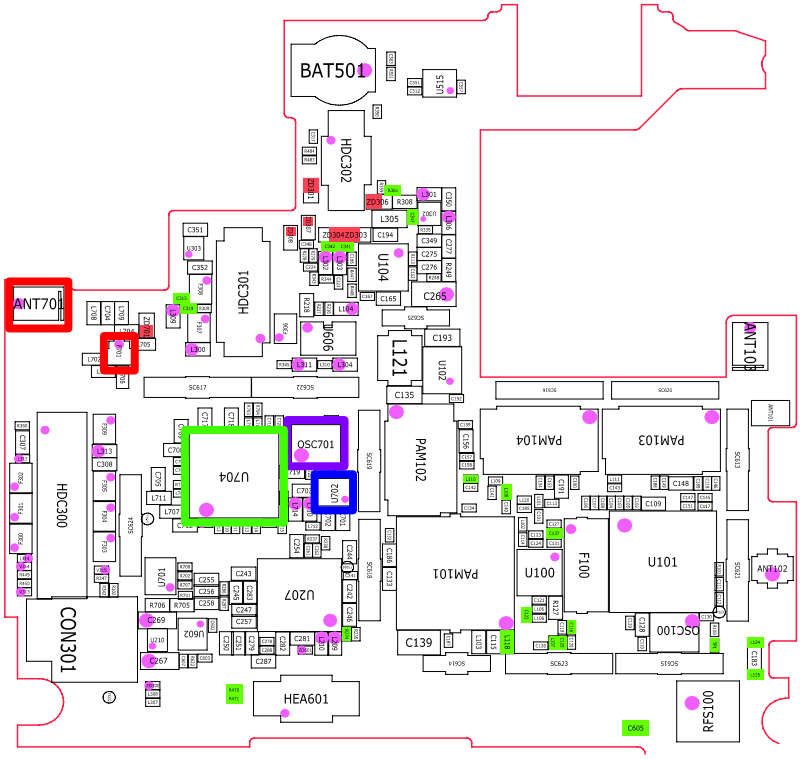

8-4. Service Schematics

- NC Point(Top View)

: **NC**

UCP400

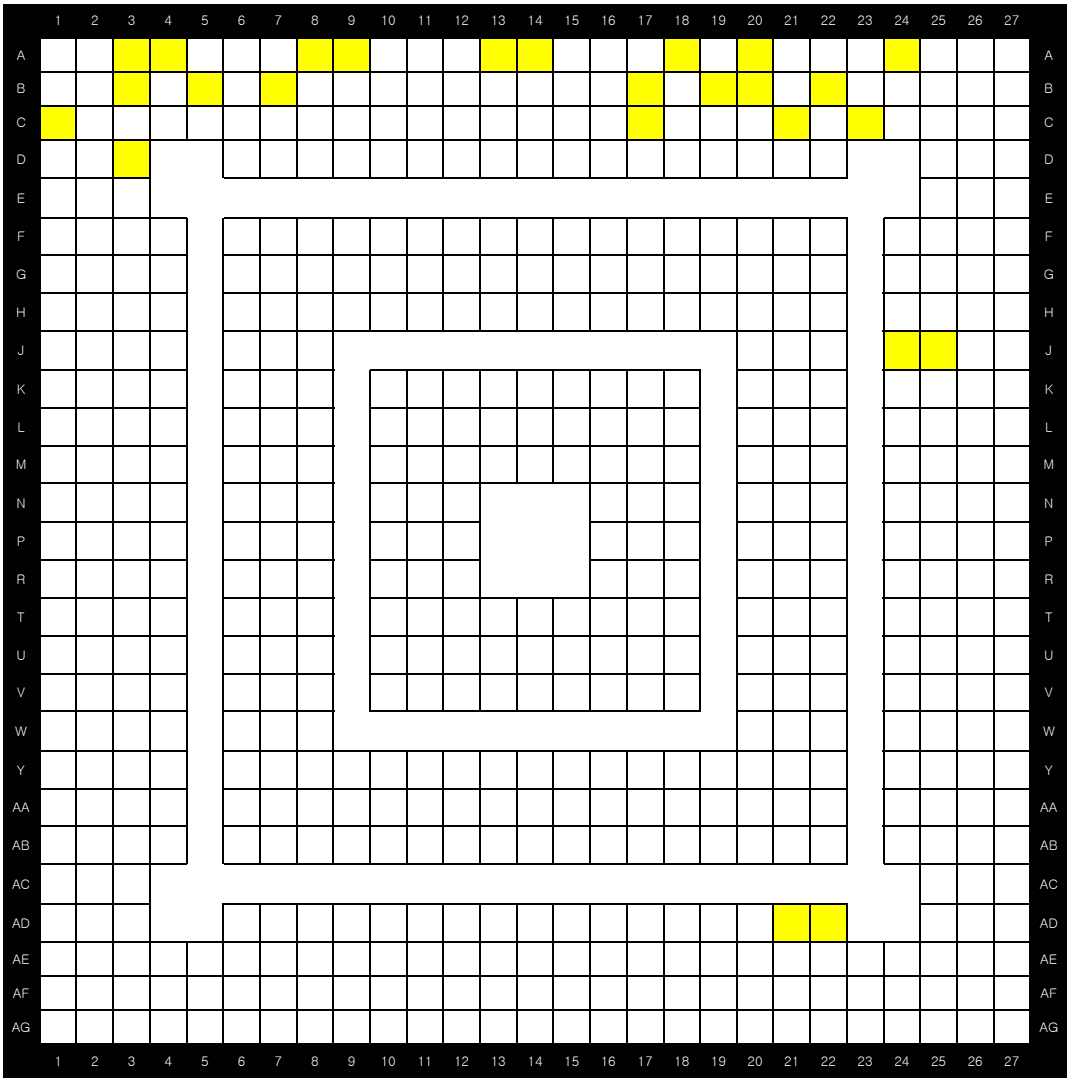

● : **NC**

UCP200

	A	B	C	D	E	F	G	H	J	K	L	M	N	P	R	T	U	V	W	Y	
	NC																			NC	20
																					19
																					18
																					17
																					16
																					15
								–													14
																					13
																					12
																					11
																					10
																					9
																					8
																					7
			NC															NC			6
										–											5
								–													4
																					3
										–											2
	NC									–										NC	1
	A	B	C	D	E	F	G	H	J	K	L	M	N	P	R	T	U	V	W	Y	

● : NC

UME301

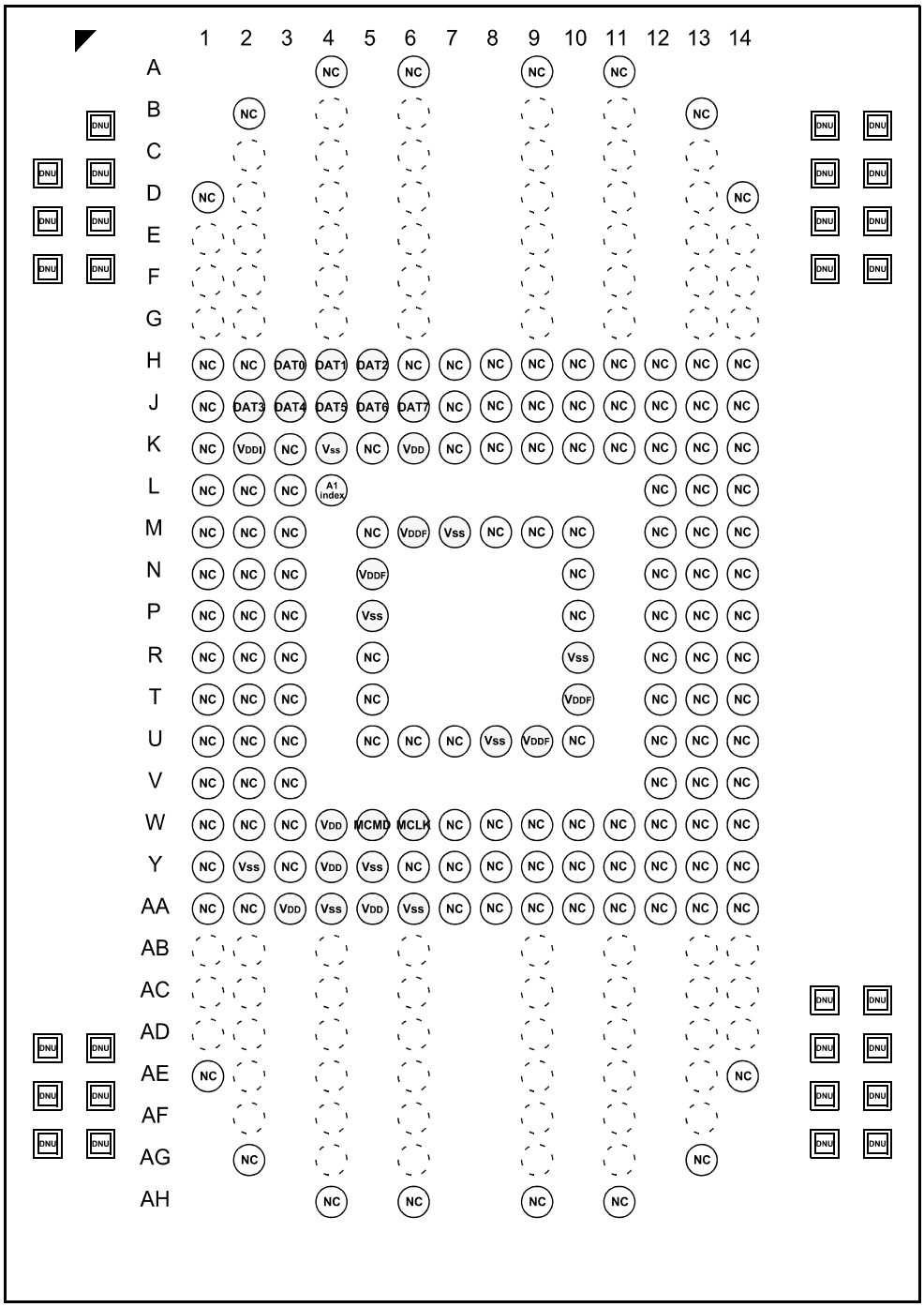

9. Reference Abbreviate

Reference Abbreviate

- **AAC**: Advanced Audio Coding.
- **AVC** : Advanced Video Coding.
- **BER** : Bit Error Rate
- **BPSK**: Binary Phase Shift Keying
- **CA** : Conditional Access
- **CDM** : Code Division Multiplexing
- **C/I** : Carrier to Interference
- **DMB** : Digital Multimedia Broadcasting
- **EN** **:** European Standard
- **ES** **:** Elementary Stream
- **ETSI**: European Telecommunications Standards Institute
- **MPEG**: Moving Picture Experts Group
- **PN** : Pseudo-random Noise
- **PS** : Pilot Symbol
- **QPSK**: Quadrature Phase Shift Keying
- **RS** : Reed-Solomon
- **SI** : Service Information
- **TDM** : Time Division Multiplexing
- **TS** **:** Transport Stream

Notice

Product	GSM	Notice No.	10-67
Model	GT-I9000	Notice Date	5th Oct '10
Subject	How to enter download mode		

1. Purpose

- To inform All Authorized Service Center of information about technical TIP

---

2. Instruction

- There is two ways to enter "Download mode" in GT-I9000 model.
- If phone cannot enter to "Download mode" with H/W key combination, you can do it with Anyway JIG too.

1) Key Combination.

① Turn off phone② Press and hold "Volume down + Home Key + Power Key"

2) Anyway JIG connection

※ If phone cannot enter to download mode with H/W Key combination, you can use the Anyway JIG (S100 or S101)

① Turn off phone② Change Anyway JIG option refer to below

- Solution Setting : 2 Infineon
- Function Setting : 2 and 6
- VBATT : ON

③ Connect phone with Anyway JIG refer to below

* If you have charged battery, Power supply is not needed.

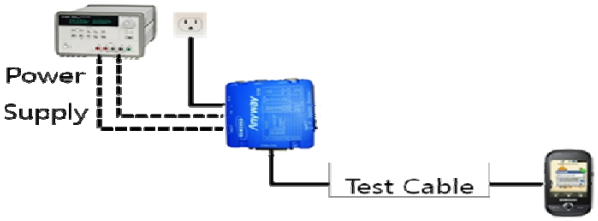

※ If you don't have USB cable connecting PC with Anyway JIG, you have to use data cable connecting PC with phone, and must have battery to download S/W.

REVISION RECORD			
LTR	ECO NO:	APPROVED:	DATE:

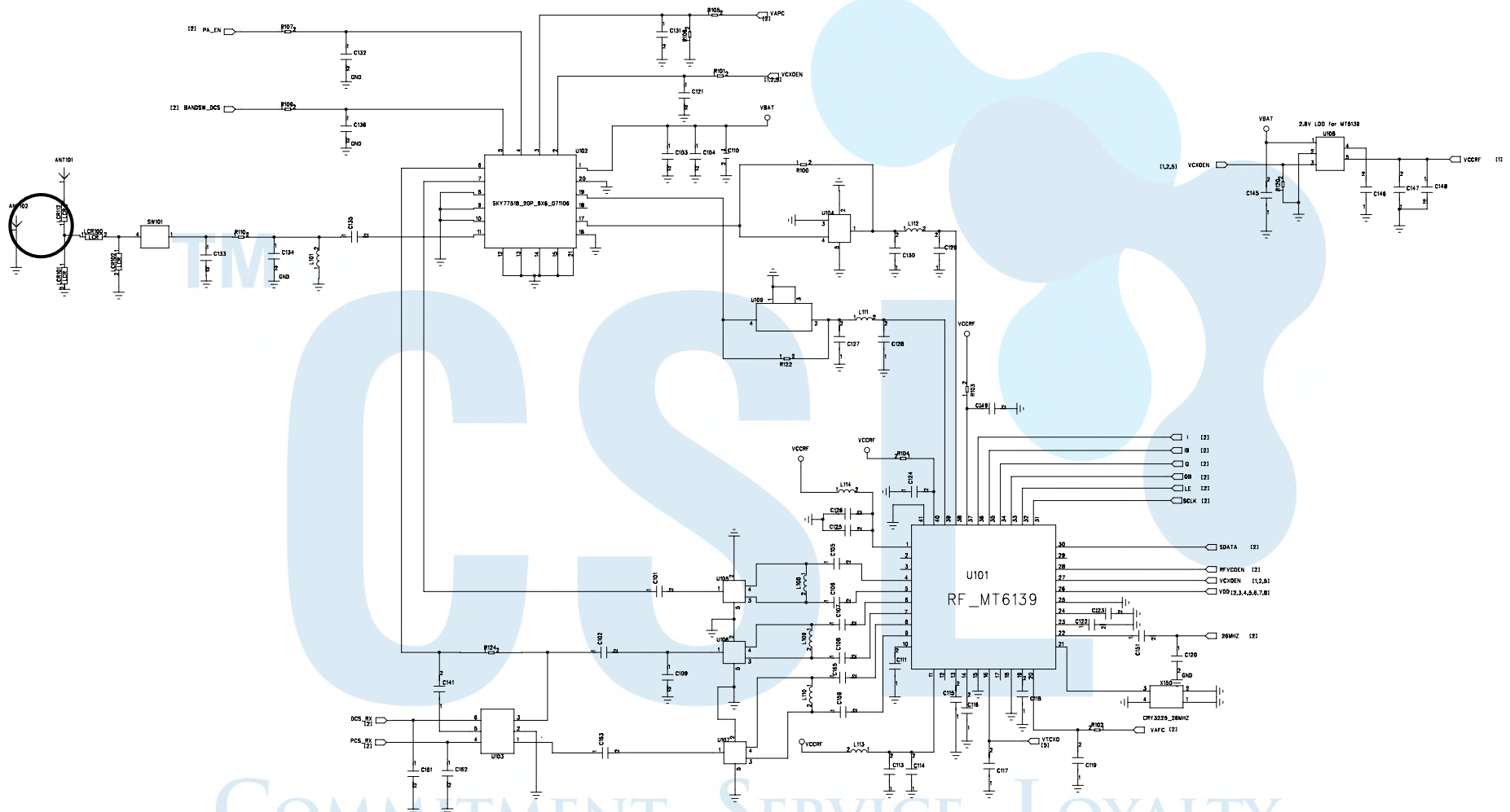

COMPANY:				
TITLE:				
DRAWN:	DATED:			
CHECKED:	DATED:	SIZE:	DRAWING NO:	REV:
QUALITY CONTROL:	DATED:			
RELEASED:	DATED:	SCALE:	SHEET: 1 OF 8	

REVISION RECORD			
LTR	ECO NO:	APPROVED:	DATE:

MT6225-DBB

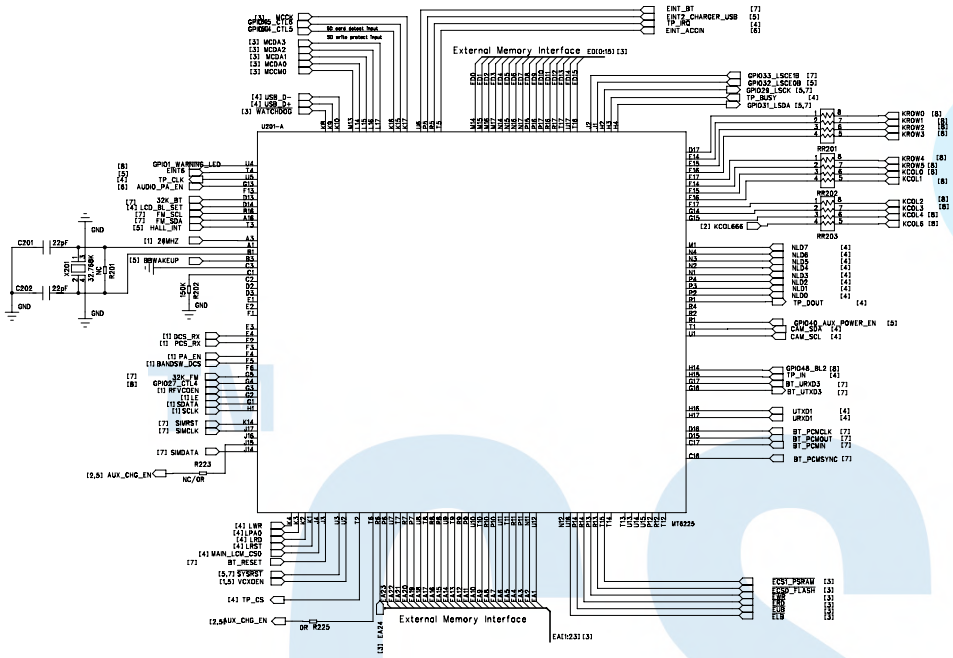

MT6225-POWER

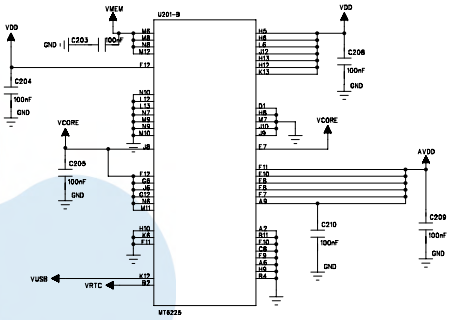

MT6225-ABB

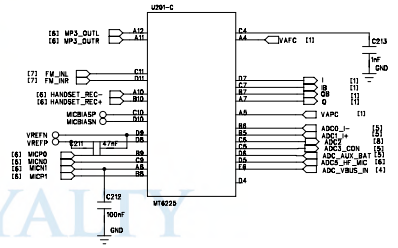

MT6225-CAMERA

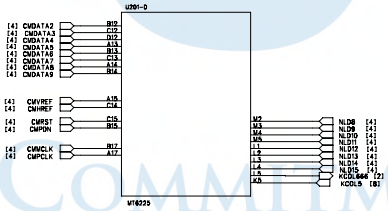

COMPANY:				
TITLE:				
DRAWN:	DATED:			
CHECKED:	DATED:	SIZE:	DRAWING NO:	REV:
QUALITY CONTROL:	DATED:			
RELEASED:	DATED:	SCALE:	SHEET: 2 OF 8	

REVISION RECORD			
LTR	ECO NO:	APPROVED:	DATE:

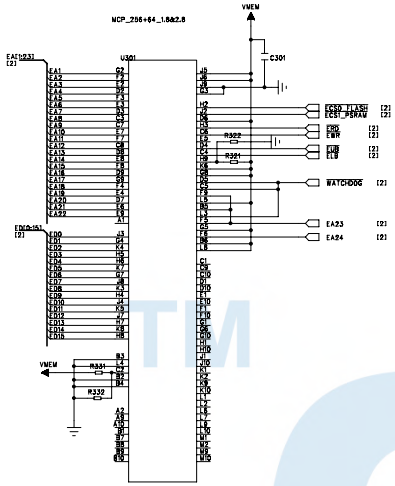

T_Flash_Socket

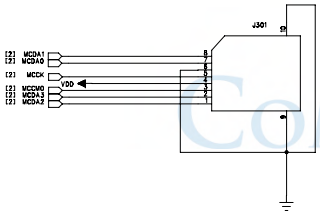

COMPANY:					
TITLE:					
DRAWN:	DATED:				
CHECKED:	DATED:		SIZE:	DRAWING NO:	REV:
QUALITY CONTROL:	DATED:				
RELEASED:	DATED:	SCALE:		SHEET: 3 OF 8	

REVISION RECORD			
LTR	ECO NO:	APPROVED:	DATE:

2.6" LCD_CONNECTOR

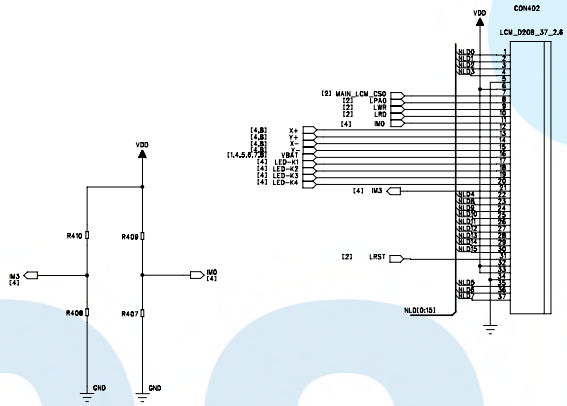

USB/Headset Jack/CHG

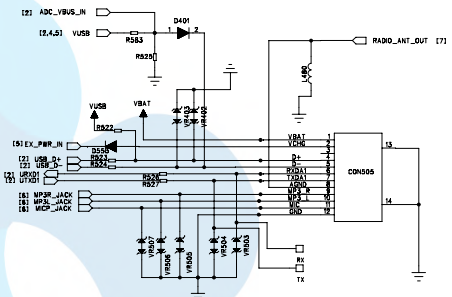

TouchPannel

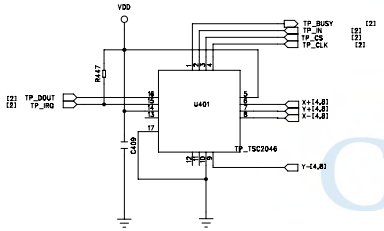

Sensor

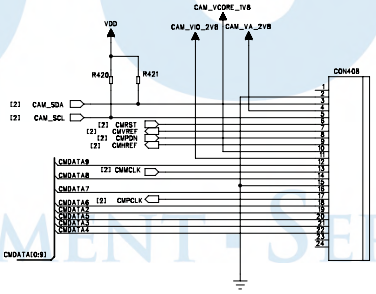

LCD BL Drive

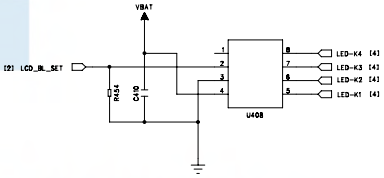

COMPANY:				
TITLE:				
DRAWN:	DATED:			
CHECKED:	DATED:	SIZE:	DRAWING NO:	REV:
QUALITY CONTROL:	DATED:			
RELEASED:	DATED:	SCALE:	SHEET: 4 OF 8	

REVISION RECORD			
LTR	ECO NO:	APPROVED:	DATE:

TEST POINT

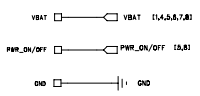

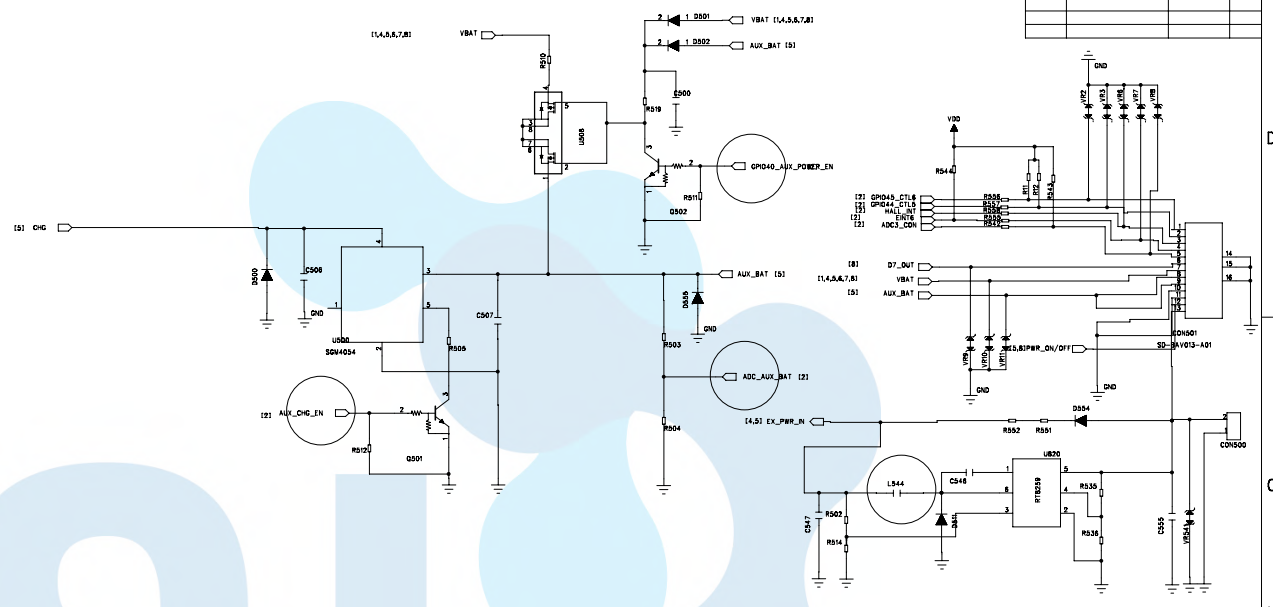

Power Management

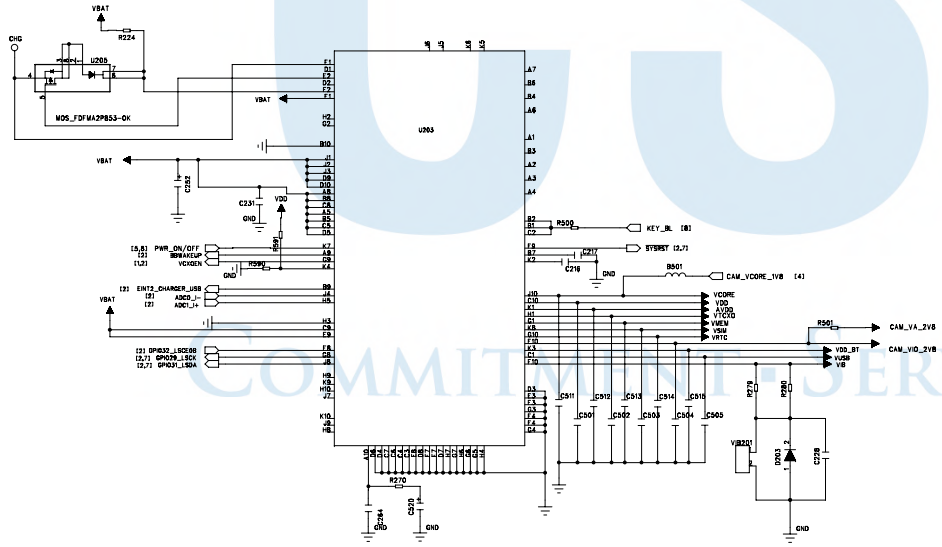

OVP

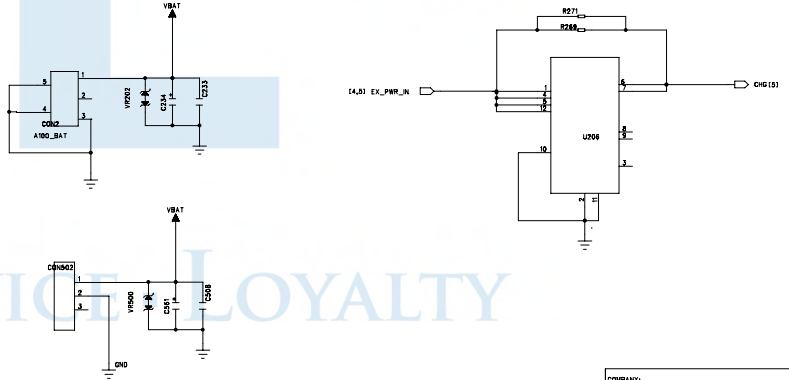

Voltage	Voltage	Max(mA)
Vcore	1.2V	200mA
VDD	2.8V	100mA
AVDD	2.8V	150mA
VTCXO	2.8V	20mA
VRTC	1.2V	200uA
VMEM	2.8V	150mA
VSIM	1.8V/2.8V	20mA

COMPANY:				
TITLE:				
DRAWN:	DATED:			
CHECKED:	DATED:	SIZE:	DRAWING NO:	REV:
QUALITY CONTROL:	DATED:			
RELEASED:	DATED:	SCALE:	SHEET: 5 OF 8	

REVISION RECORD			
LTR	ECO NO:	APPROVED:	DATE:

Receiver

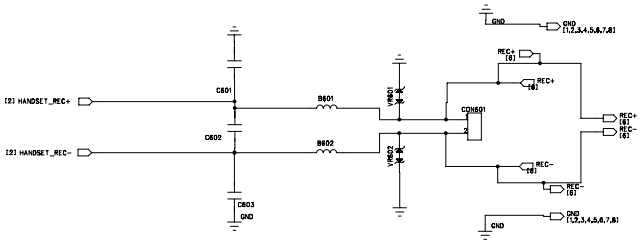

Microphone circuit

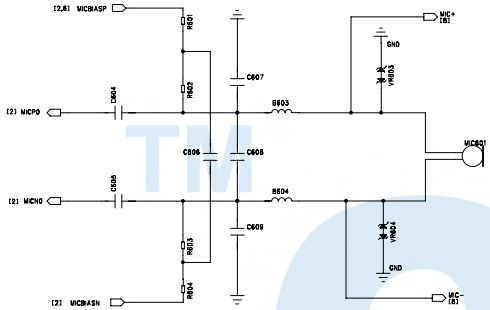

HEADSET MODE/ DIGITAL MUSIC

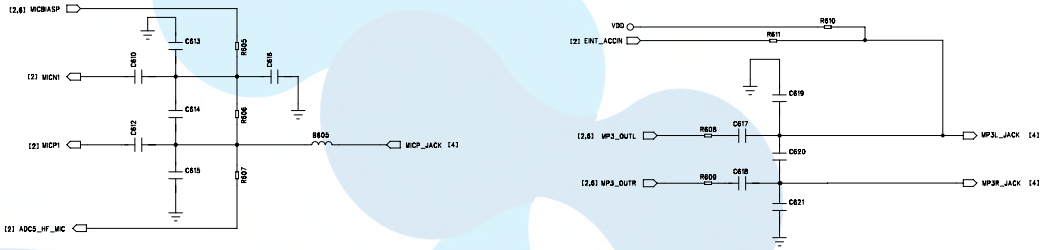

G Sensor

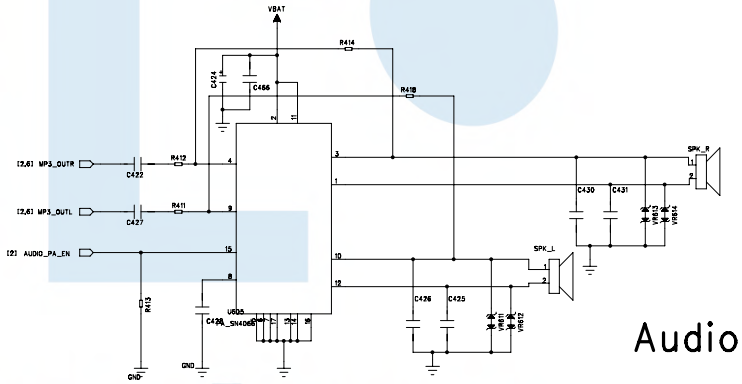

Audio PA

COMPANY:			
TITLE:			
DRAWN:	DATED:		
CHECKED:	DATED:	SIZE:	DRAWING NO:	REV:
QUALITY CONTROL:	DATED:		
RELEASED:	DATED:	SCALE:	SHEET: 6 OF 8

REVISION RECORD			
LTR	ECO NO:	APPROVED:	DATE:

Blue Tooth

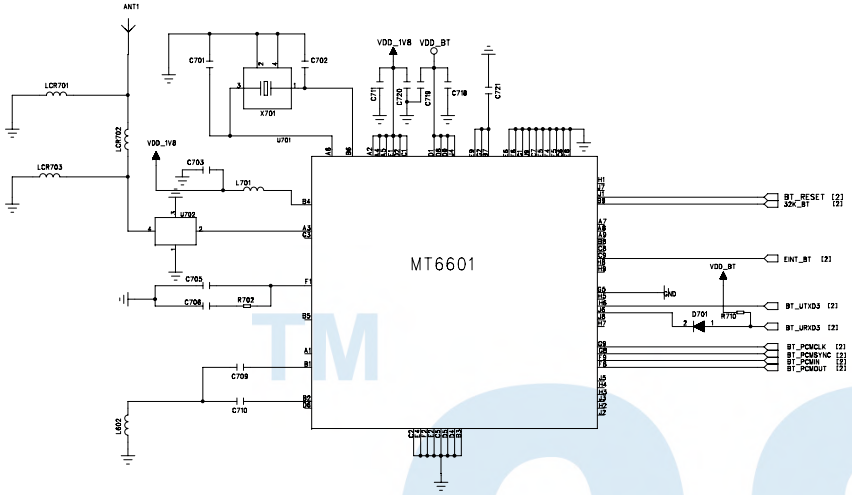

FM RADIO

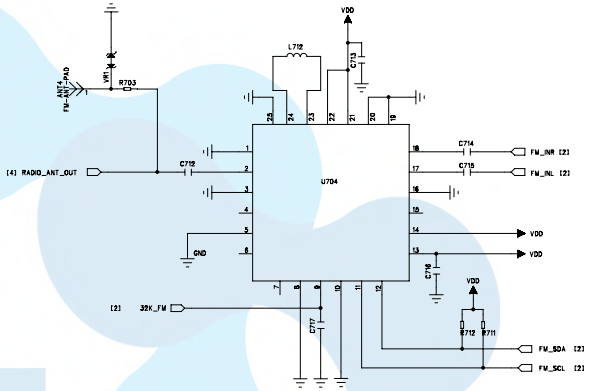

SIM Connector

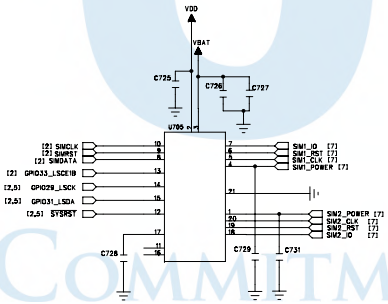

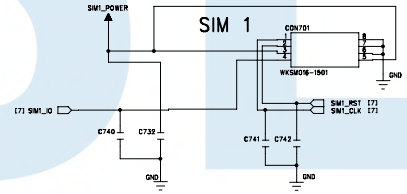

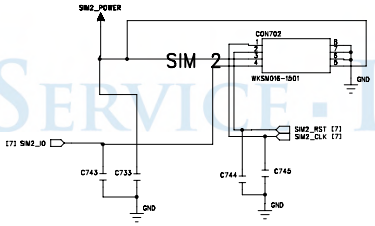

COMPANY:				
TITLE:				
DRAWN:	DATED:			
CHECKED:	DATED:	SIZE:	DRAWING NO:	REV:
QUALITY CONTROL:	DATED:			
RELEASED:	DATED:	SCALE:	SHEET: 7 OF 8	

REVISION RECORD			
LTR	ECO NO:	APPROVED:	DATE:

Distance Sensor

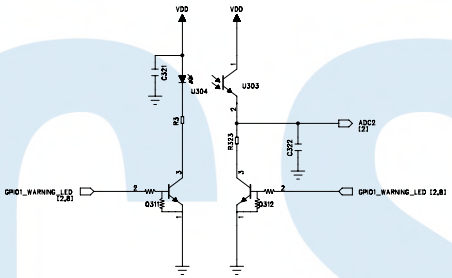

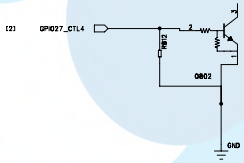

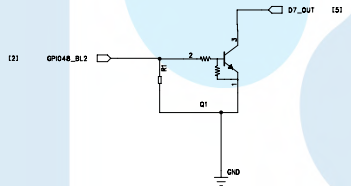

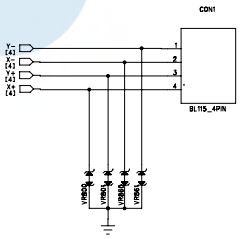

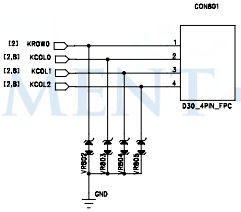

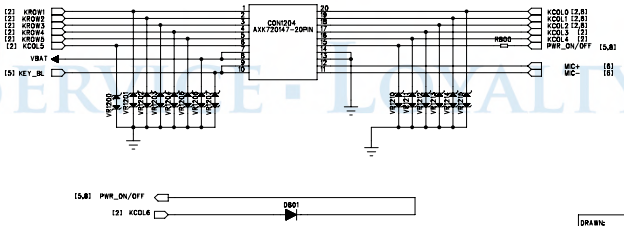

SIDEKEY_FPC

Fiducial Mask			
Inside		Outside	
TOP	BOT	TOP	BOT
F1 F2	F3 F4		

COMPANY:				
TITLE:				
DRAWN:	DATED:			
CHECKED:	DATED:	SIZE:	DRAWING NO:	REV:
QUALITY CONTROL:	DATED:			
RELEASED:	DATED:	SCALE:	SHEET: 8 OF 8	

Service Training manual

GT-I9000

H/W Platform 2 Group

Contents

Concept & Main features

- **Stylish & Slim Design**
- **Processor**
  - 1GHz Application Processor
- **Display / Size**
  - 4.0" WVGA 16M SUPER AMOLED
- **Network**
  - WCDMA(3G HSDPA) 900/1900/2100
  - GSM(2G EDGE/GPRS) Quad band
- **Camera**
  - 5M pixel AF Camera
  - Smile/Panorama/Continuous/Beauty, vintage shot
- **Video**
  - HD video (1280x720) Playing/Recording
  - DivX, XviD supported
- **Radio**
  - FM Radio with RDS / real time recording
- **Memory**
  - 2GB + microSD (up to 32GB)
- **Connectivity**
  - Bluetooth v3.0 / USB 2.0 FS / Wi-Fi 802.11n/ GPS
- **Battery**
  - 1500mAh
- **Music**
  - MP3/AAC/AAC+/Eaac+/WMA/AMR/MIDI/SP-MIDI/i-melody/WAV/MMR/Real(Vodafone only)
- **Sensor**
  - Accelerator Sensor / Proximity Sensor / G-sensor, Ambient Light Sensor
- **Additional**
  - TouchWiz 3.0 / Application store / Voice & Motion UI
  - SMS/MMS/Email/Video Messaging Email/ Push Email (Exchange ActiveSync)
  - Multi-touch, Multi-task manager

Concept & Main features

Category	Description
B/B Chipset	XMM6160 (Infineon)
Standard	HSDPA 7.2Mbps, HSUPA 5.76Mbps EDGE/GPRS Class 12 (EDGE Rx-Only)
RF Band	2.5G : 850+900+1800+1900 MHz (2.5G) 3G : 900+1900+2100 MHz
Additional Chip	N/A
Dimension	122.4 x 64.2 x 9.9 mm
Display	4.0" WVGA 16M OCTA (On Cell TSP AMOLED) C-type Touch
Camera	5M AF
Flash	N/A
Memory	Total : 4G(OneNand) + 3G(DRAM) + 1G(OneDRAM) User : 400MB + 1GB(for Appl.)
Ex. Memory	Micro SD (up to 32GB)
Antenna	GPS, BT, Main
SIM	Sliding type, 3V/1.8V

Category	Description
Battery	Li-ion 1500mAh
- STD time	Up to 750h(2G), 600h(3G)
- Talk time	Up to 13.1h(2G), 6.7h(3G)
Connectivity	GPS Wi-Fi (802.11n) USB 2.0 High Speed BT v3.0
I F Connector	Micro USB
Speaker	Size : 15x11mm, 3.5t SPK/RCV : Separated
Ear Jack	3.5pi Earjack (4)
CMF	Main Color : Metallic Silver Body : Black Battery Cover: Metallic Black
VPS	**Package** : TA, battery, Headset, Data cable **Option** : DC, Car Charger, Car Cradle, Battery Charger, Mic. Cable,
User Benefit	Reinforced connectivity w/ GPS & Wi-Fi Accelerometer sensor, G-sensor Easy to enjoy music w/ your 3.5pi earphone

Contents

Block Diagram

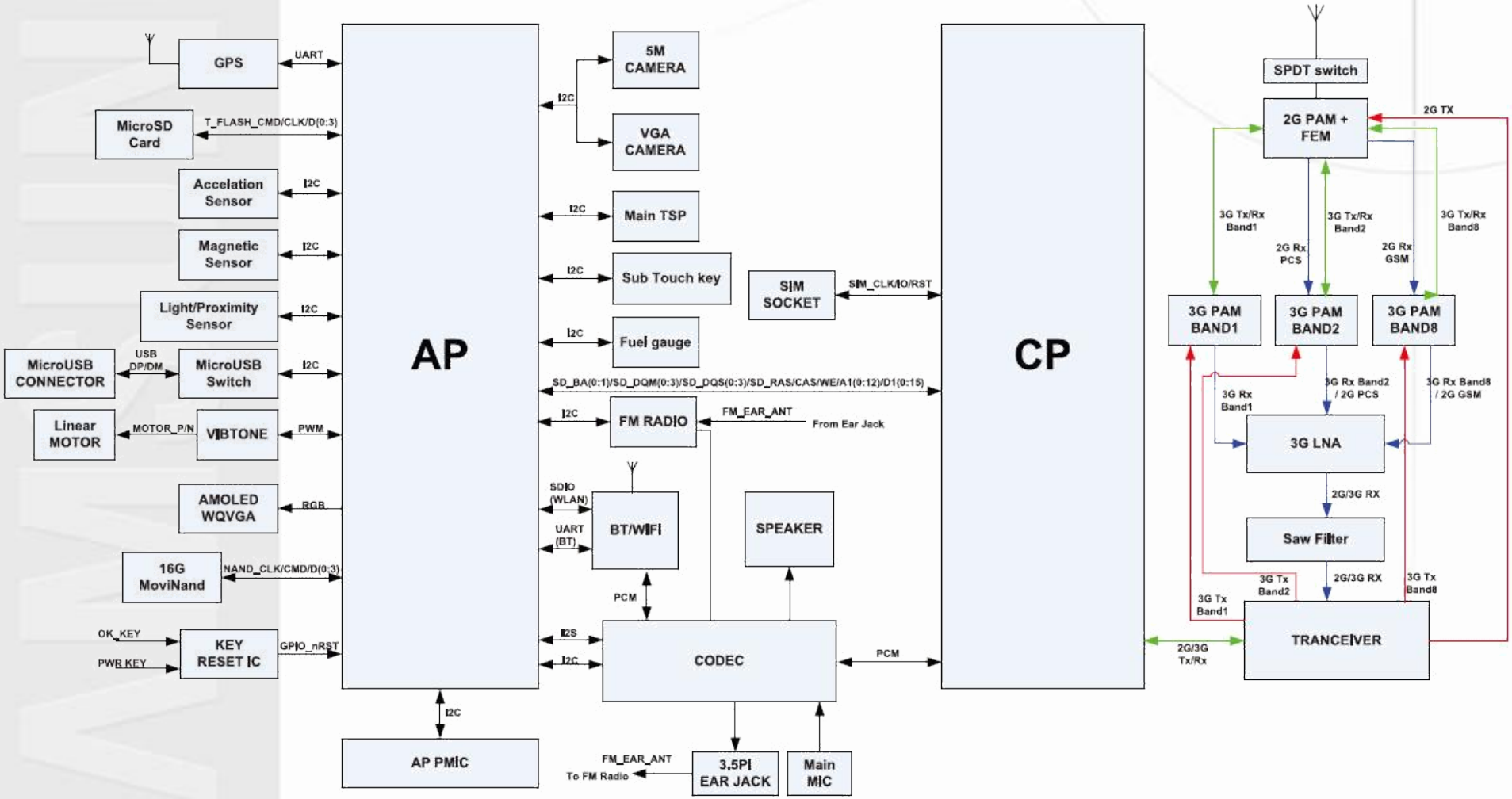

Contents

Main Top

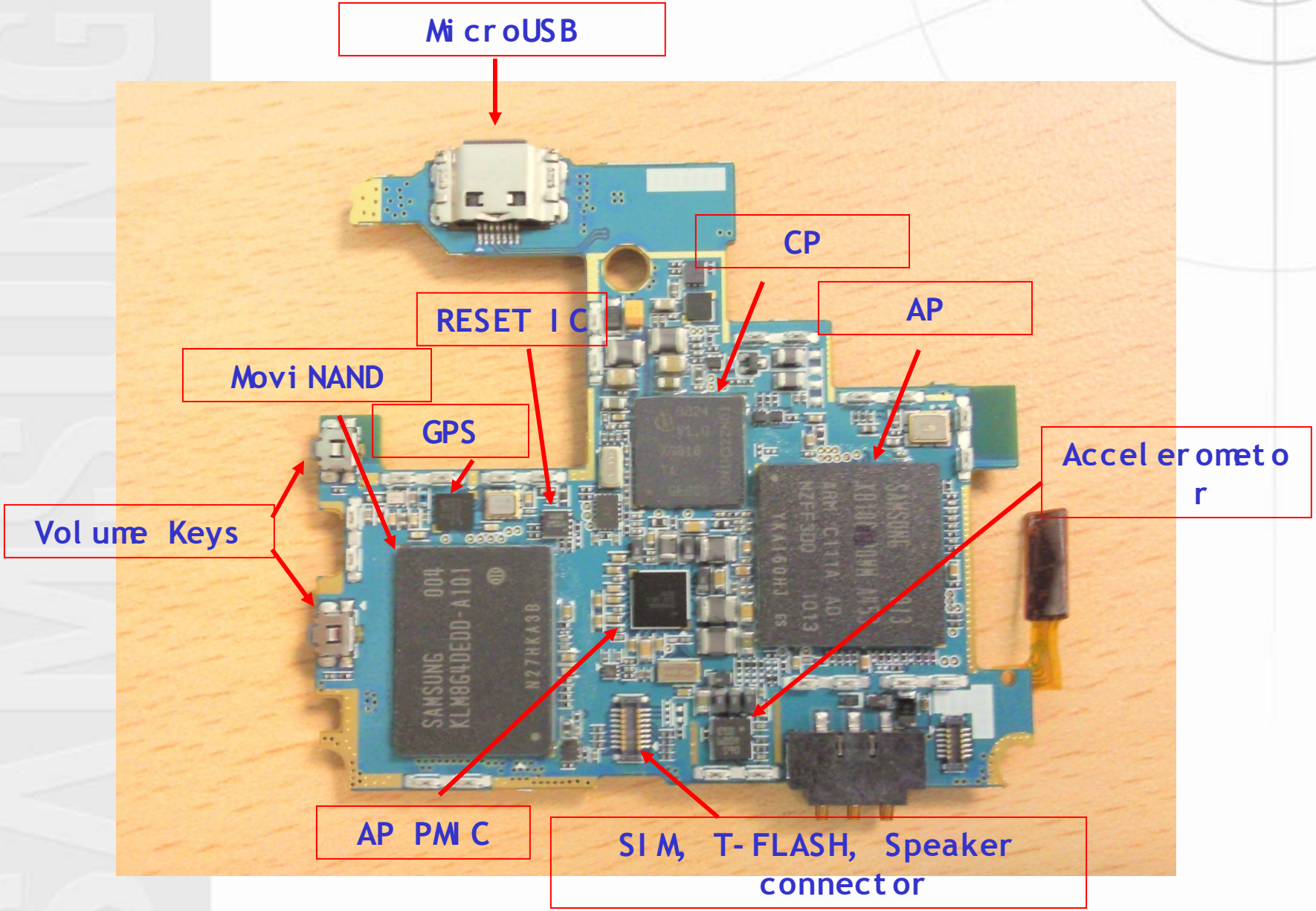
MicroUSB
CP
RESET IC
AP
MoviNAND
GPS
Accelerometor
Volume Keys
AP PMIC
SIM, T-FLASH, Speaker connector

Main Bottom

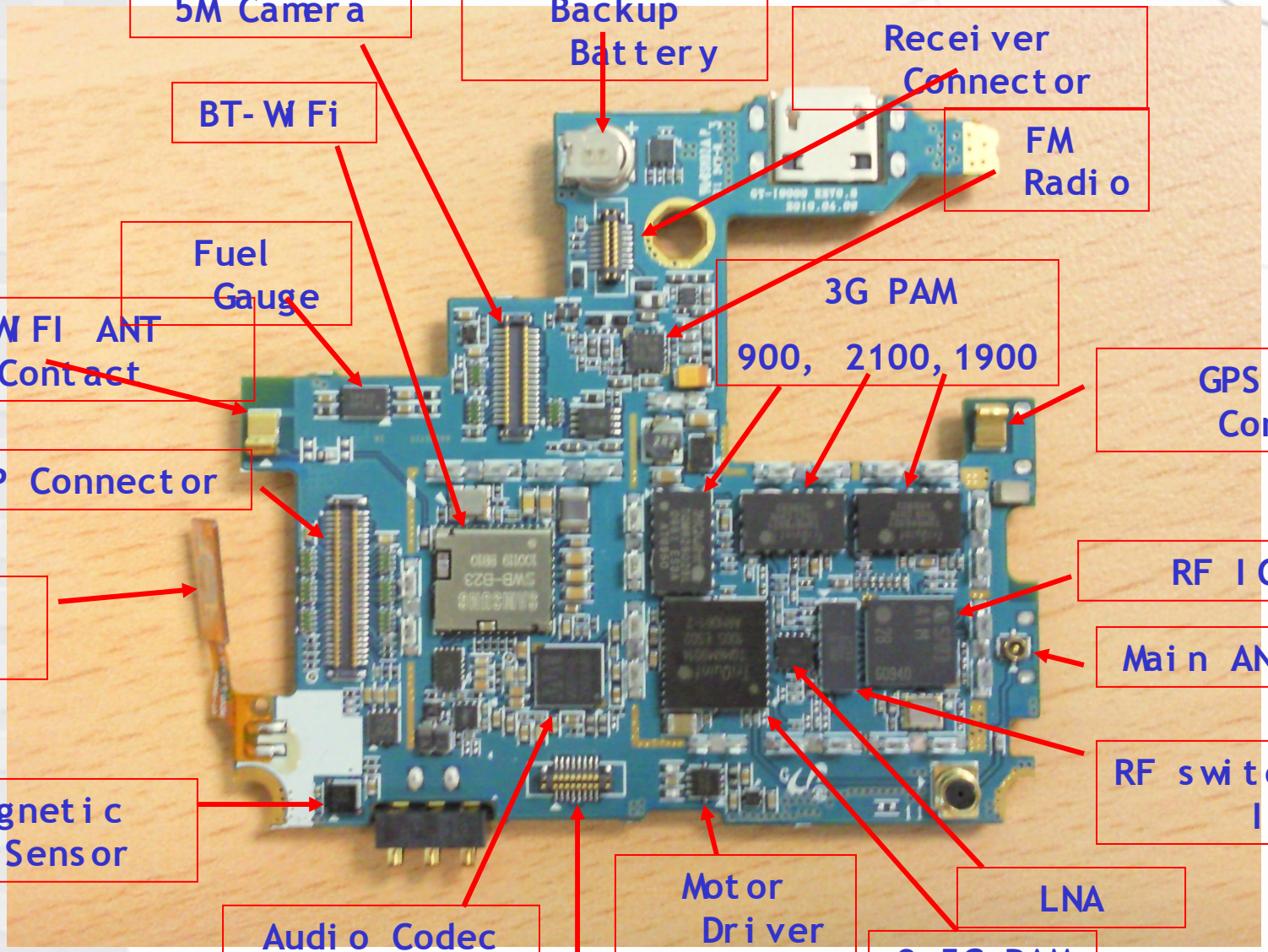
5M Camera
Backup Battery
Receiver Connector
BT-WiFi
FM Radio
Fuel Gauge
3G PAM
900, 2100, 1900
BT/WiFi ANT Contact
GPS ANT Contact
LCD+TSP Connector
RF IC
Power Key
Main ANT Conn.
RF switching IC
Magnetic Sensor
Motor Driver
LNA
Audio Codec
2.5G PAM
Sub-Touch Key Connector

Ass'y

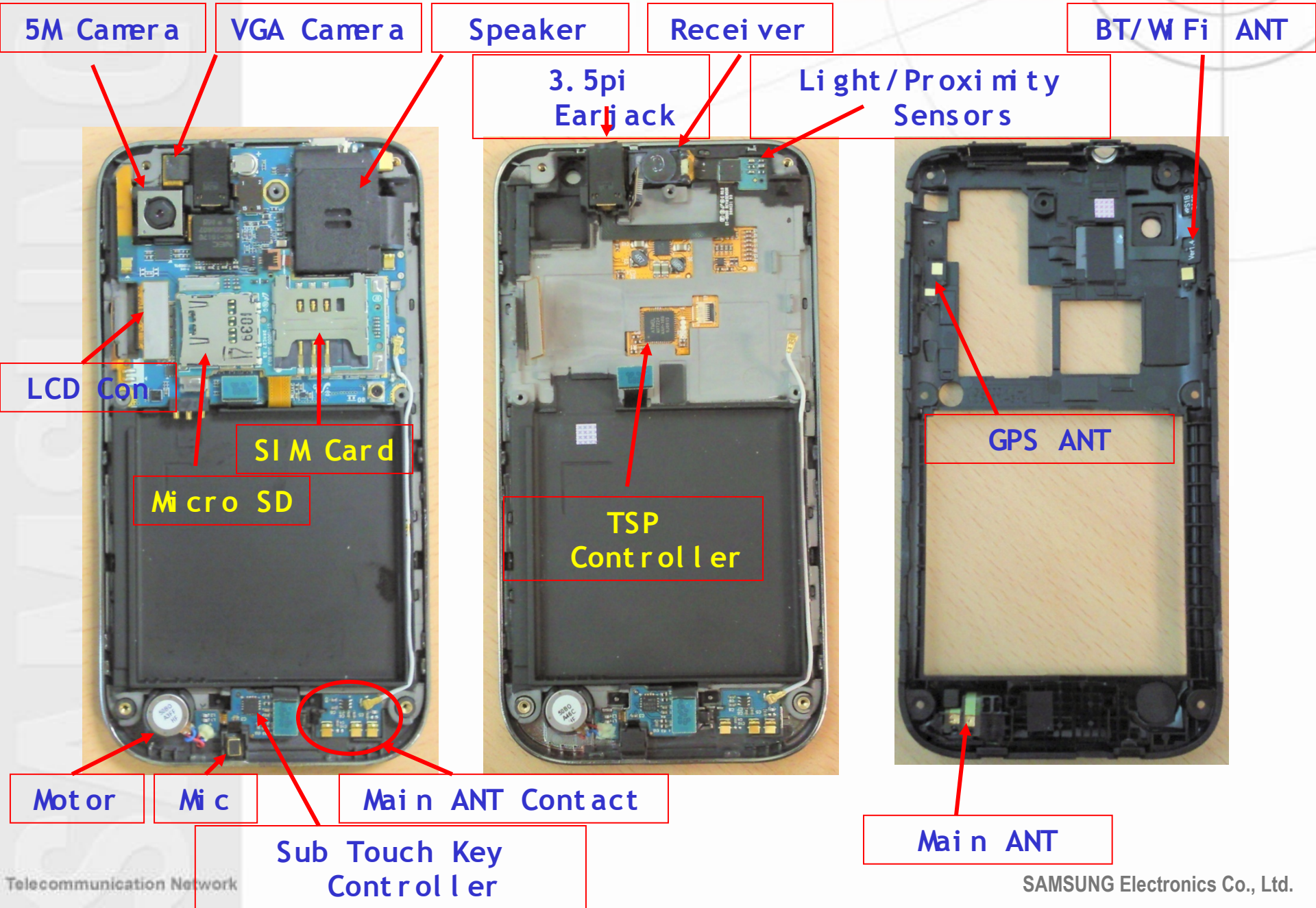
5M Camera
VGA Camera
Speaker
Receiver
BT/Wi Fi ANT
3.5pi Earjack
Light/Proximity Sensors
LCD Con
SIM Card
Micro SD
TSP Controller
GPS ANT
Motor
Mic
Main ANT Contact
Sub Touch Key Controller
Main ANT

Contents

Disassembly

1 Unscrew screws on the rear	2 Unhook the rear using a disassembly knife to remove the rear cover
	
Unscrew 7 screws on the rear using a screw driver.	Be careful not to damage the rear cover when unhooking it.

Disassembly

3 Detach the Power Key FPCB	4 Disconnect connectors from the Main PBA
	
Detach the power key FPCB, that is stick to the bracket by a double-sided tape, using tweezers. Make sure to remove all remaining tape on the bracket.	Disconnect LCD Connector,Receiver Connector, Sub-touch Key Connector and Antenna cable from the Main PBA

Disassembly

5 Pull out the Main PBA	6 Remove the Antenna Cable
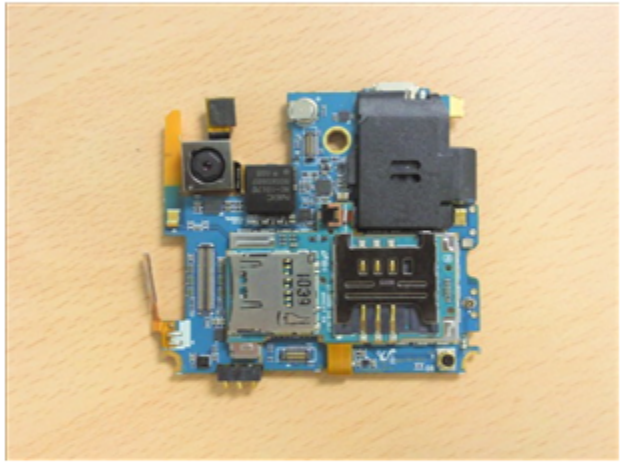	
After disconnecting the connectors carefully pull the Main PBA out of the bracket.	Remove the antenna cable from the main Antenna PCB on the sub-touch key module.

7 Remove the top shield can	8 Remove the Camera Module
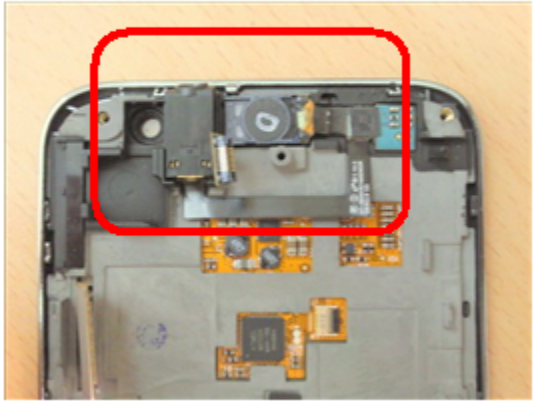 	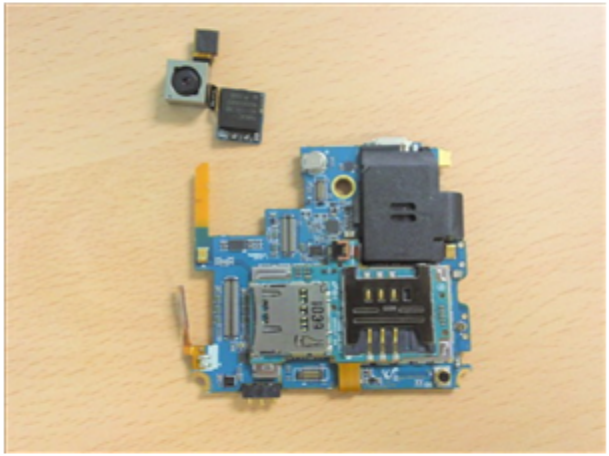
Pull out the Receiver module from the bracket. Be careful not to damage the FPC.	Remove the camera module from the Main PBA by pulling it out.

Disassembly

9 Pull out the Main PBA	10 Remove the top shield can
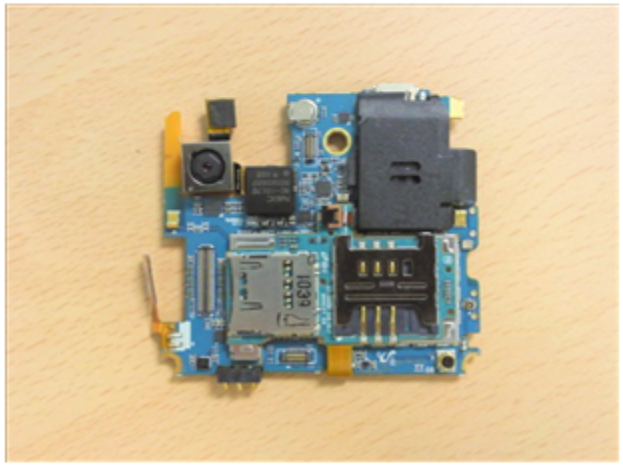	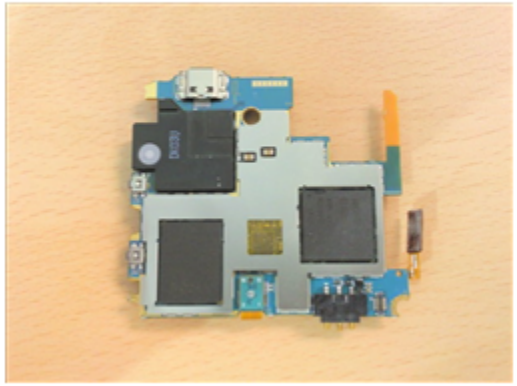 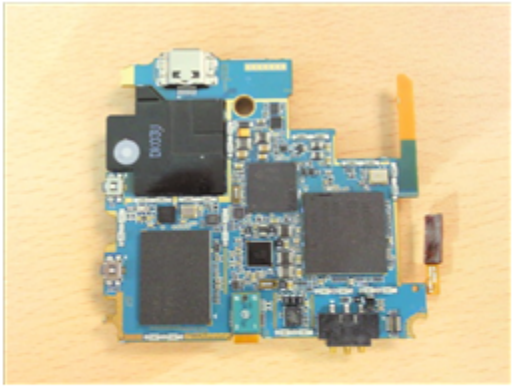
After disconnecting the connectors carefully pull the Main PBA out of the bracket.	Be careful not to damage the shield can and the components when removing it.

Disassembly

11	Remove the rear shield can + Sim Card PBA

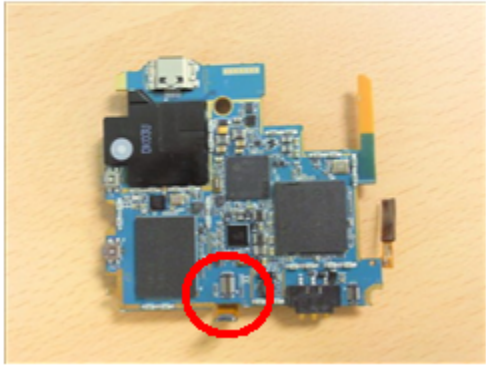

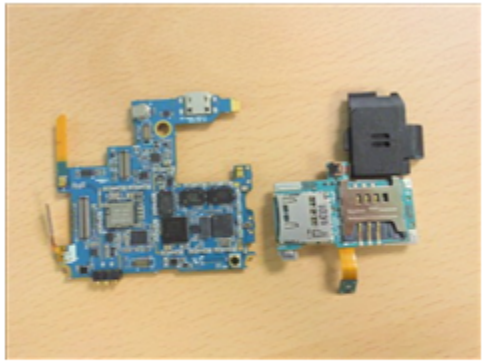

Disconnect the Sim Card PBA connector from the Main PBA then remove the rear shield can + Sim Card PBA

12	Remove the speaker

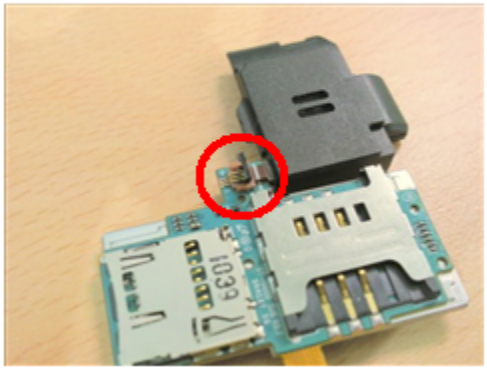

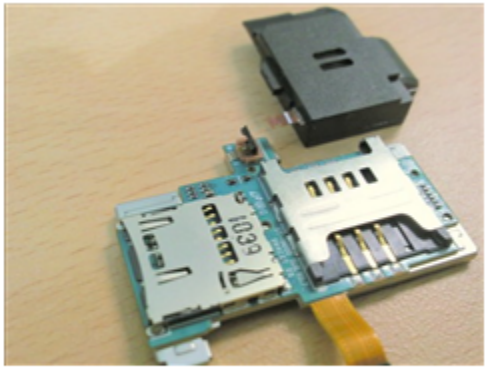

Remove the speaker by opening the connector.

Assembly

1 Place the top shield can.	2 Connect the speaker to the Sim Card PBA
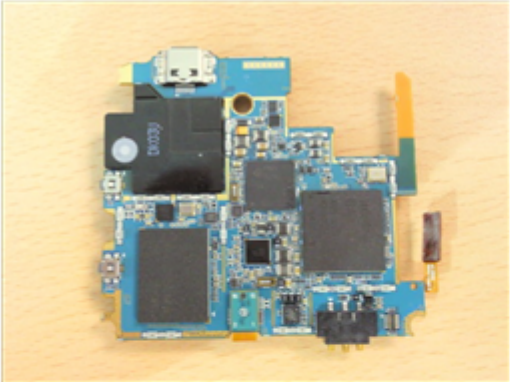 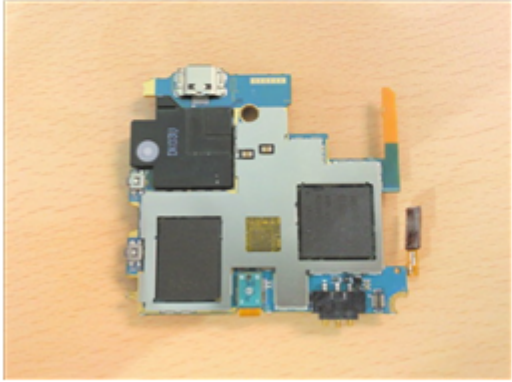	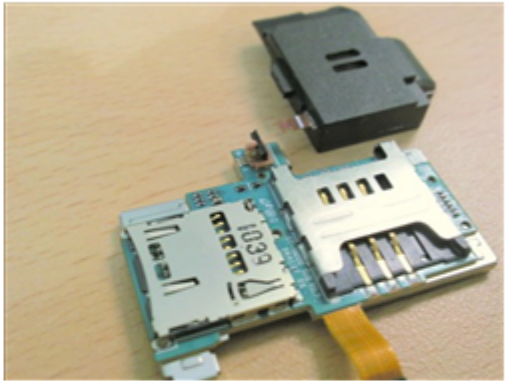 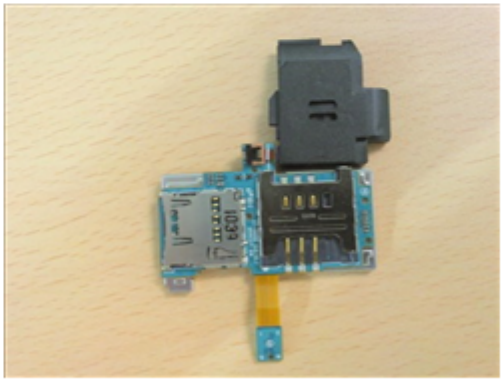
Place the top shield can on the Main PBA	Connect the speaker to the Sim Card PBA by sliding FPC into the connector.

Assembly

3 Place the Sim Card PBA + shield can	4 Connect the Sim Card PBA Connector
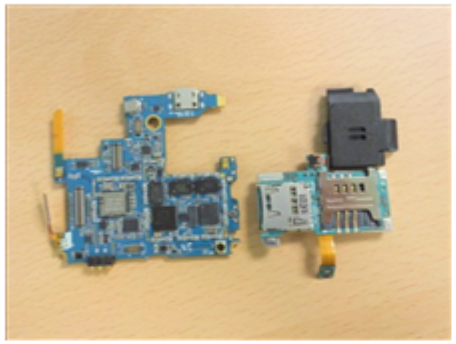 	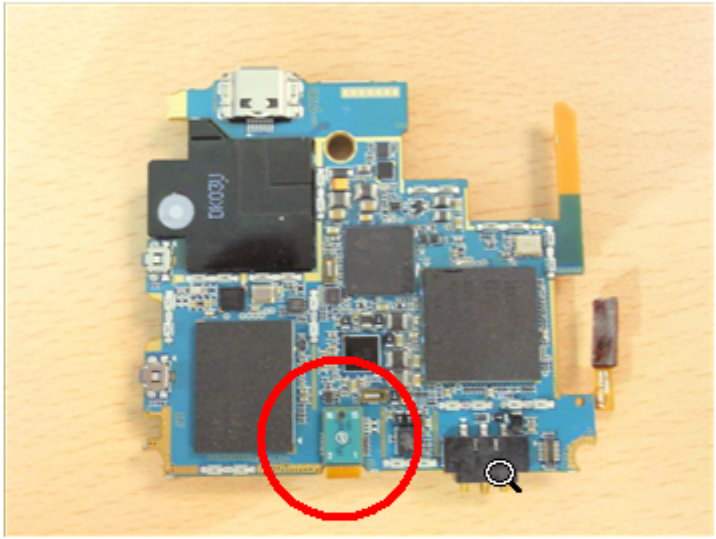
Place the bottom shield can + Sim Card PBA onto the bottom of the Main PBA. Make sure that the speaker locks into position and the shield can to be place correctly into the clips.	Connect the sim card PBA connector to the top of the main PBA.

Assembly

5 Place the top shield can	6 Place the camera module
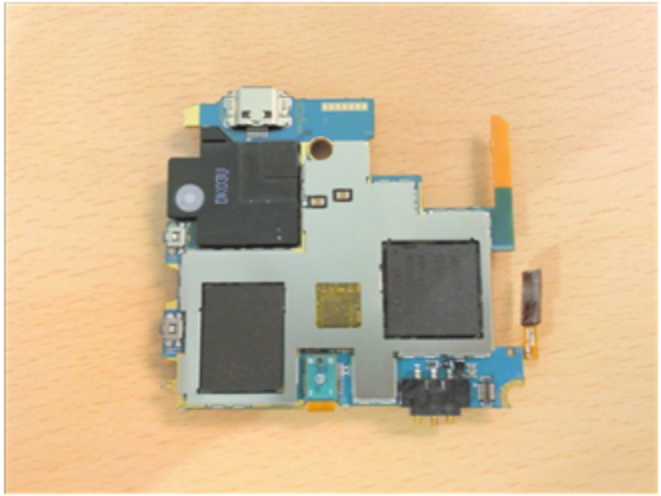	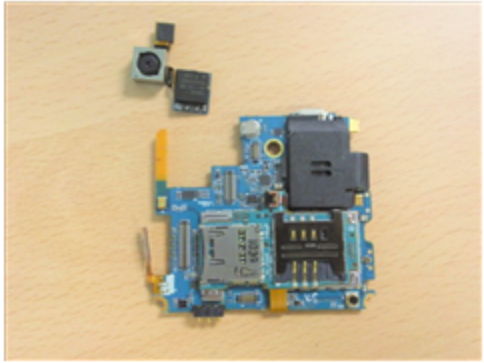 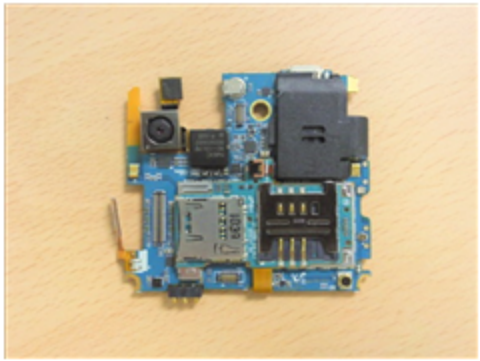
Place the top shield can on the top of the main PBA	Connect the camera module to the Main PBA

Assembly

7 Place the Receiver Module	8 Connect the Antenna Cable
 	
Place the receiver module onto the bracket.	Connect the antenna cable to the Main Antenna PCB

Assembly

9 Place the Main PBA	10 Connect LCD, Sub-touch key, Antenna and Receiver connectors and place the Power key
	
Place the main PBA onto the bracket. Make sure to place the camera module into the socket correctly.	Connect LCD, Sub-touch key, Antenna and Receiver connectors, and place the Power key to the side of the bracket

11 Place the rear cover	12 Screw the rear cover
	
Make sure all the hooks are placed correctly, and press the volume keys and the power key for tensions.	Screw 7 points on the rear cover

Contents

PBA TOP/BOTTOM

Power On/Off

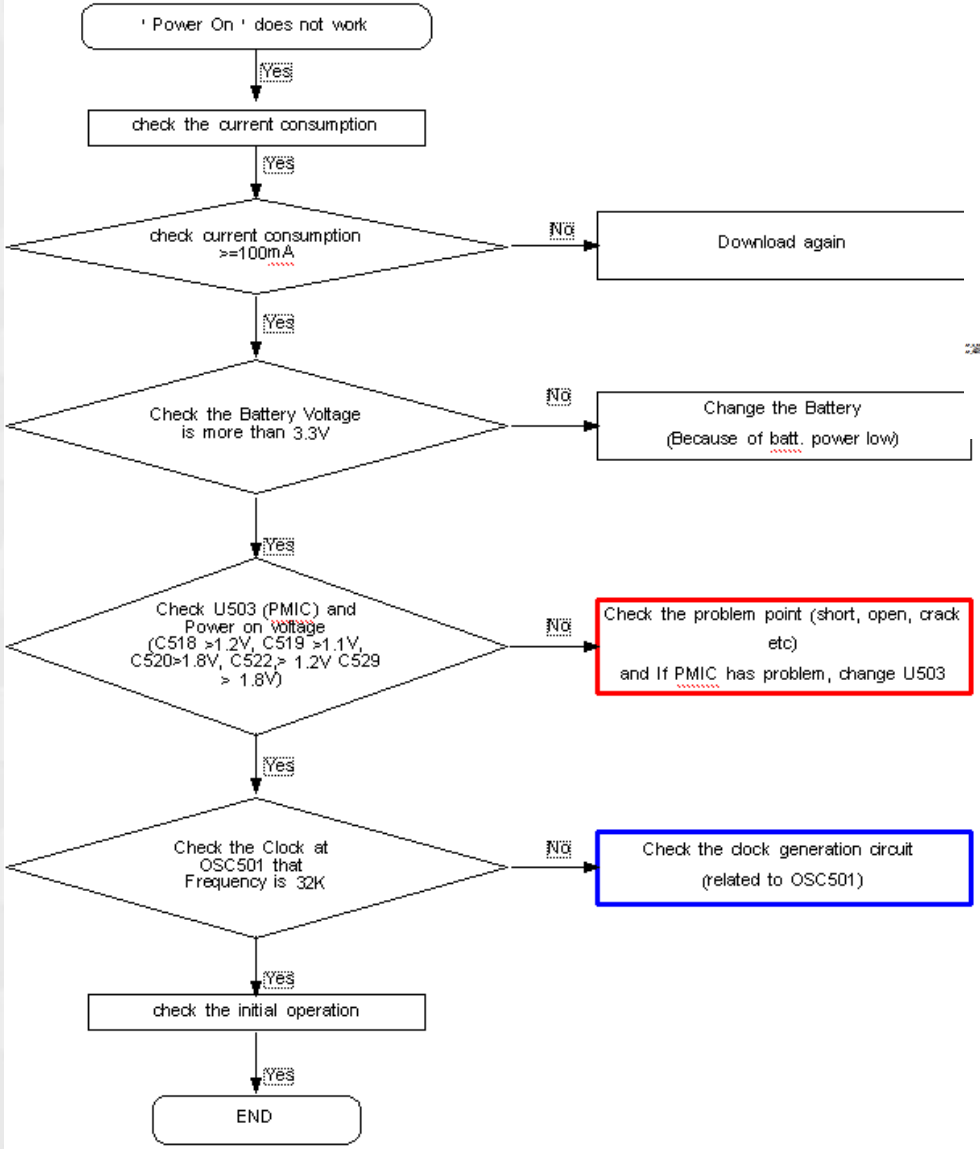
' Power On ' does not work
Yes
check the current consumption
Yes
check current consumption >=100mA
No
Download again
Yes
Check the Battery Voltage is more than 3.3V
No
Change the Battery
(Because of batt. power low)
Yes
Check U503 (PMIC) and Power on voltage (C518 >1.2V, C519 >1.1V, C520>1.8V, C522,> 1.2V C529 > 1.8V)
No
Check the problem point (short, open, crack etc)
and If PMIC has problem, change U503
Yes
Check the Clock at OSC501 that Frequency is 32K
No
Check the clock generation circuit
(related to OSC501)
Yes
check the initial operation
Yes
END

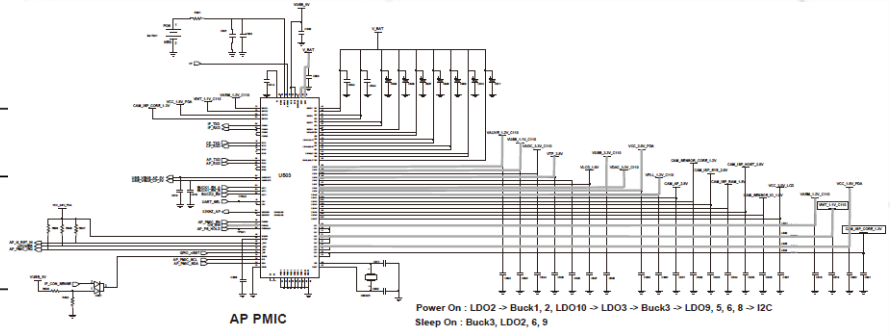
AP PMIC
Power On : LDO2 -> Buck1, 2, LDO10 -> LDO3 -> Buck3 -> LDO9, 5, 6, 8 -> I2C
Sleep On : Buck3, LDO2, 6, 9

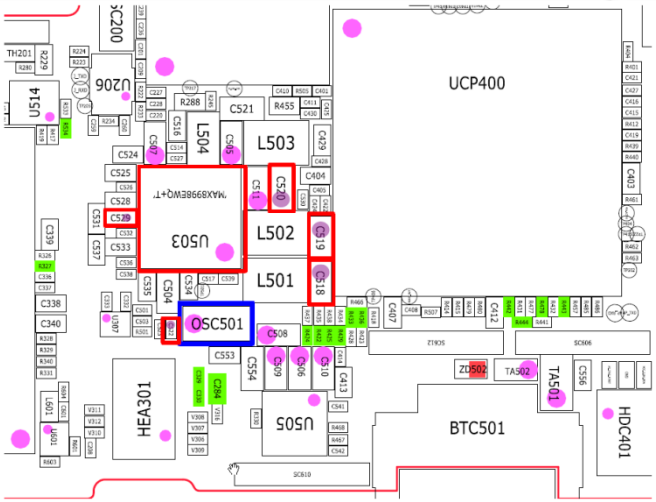
UCP400
U514
U206
L504
L503
L502
L501
U503
OSC501
HEA301
U505
BTC501
HDC401
TA501

Initialization

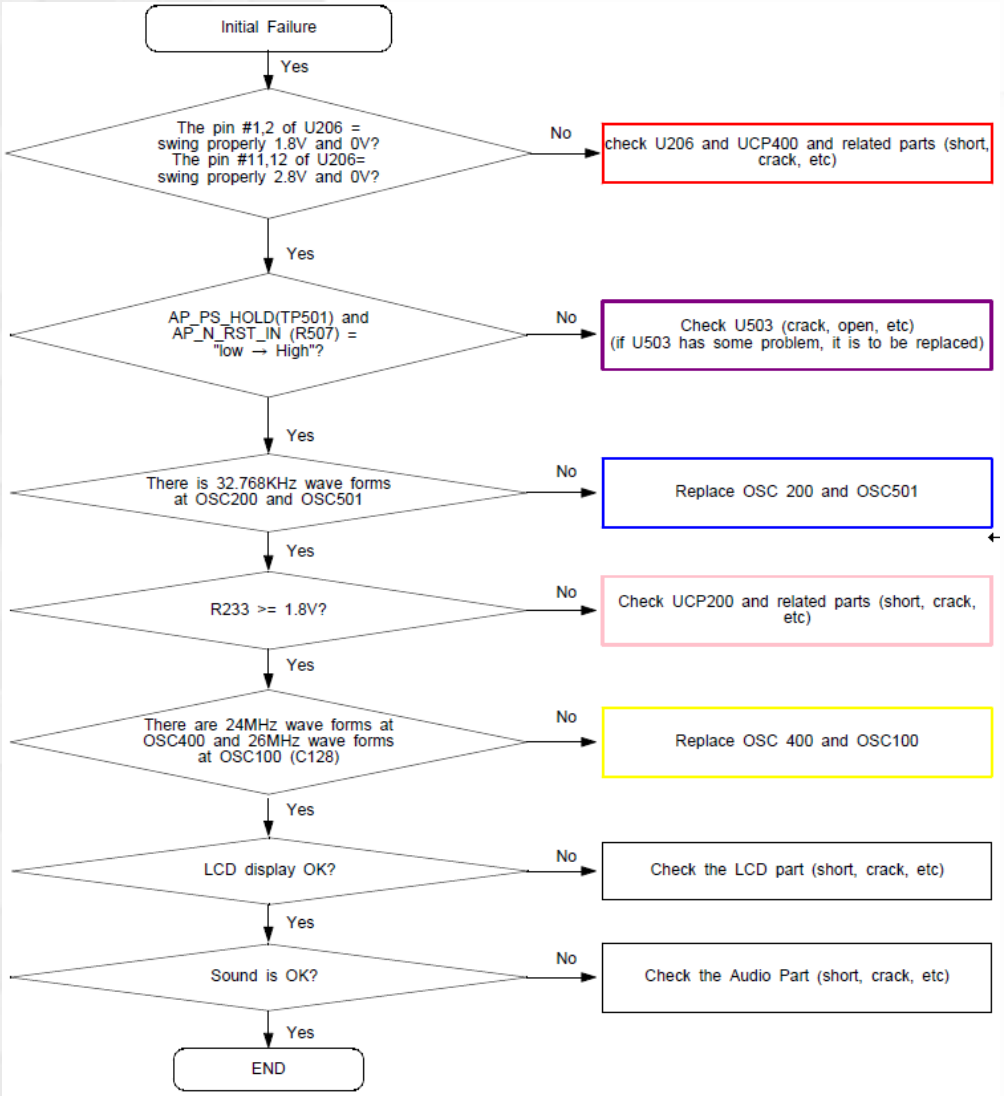

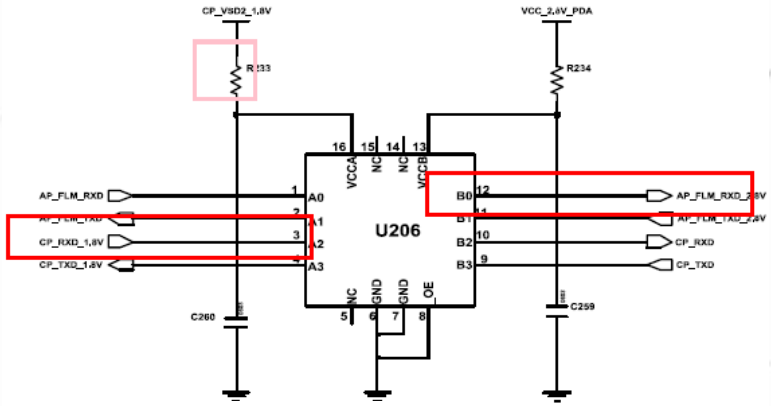

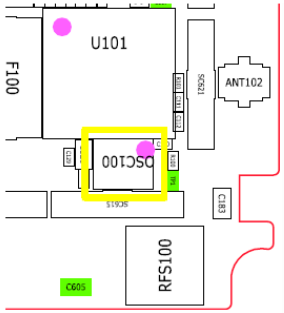

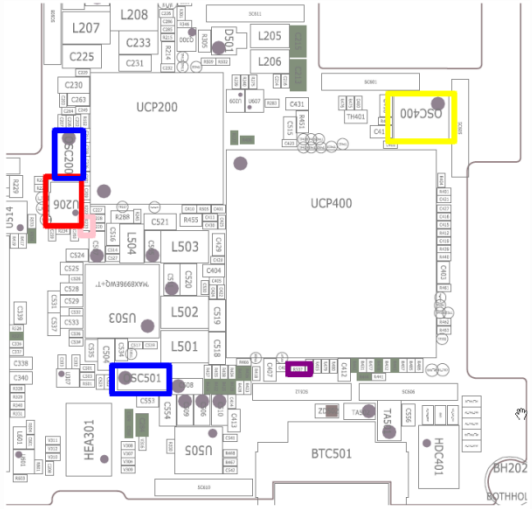

Charging

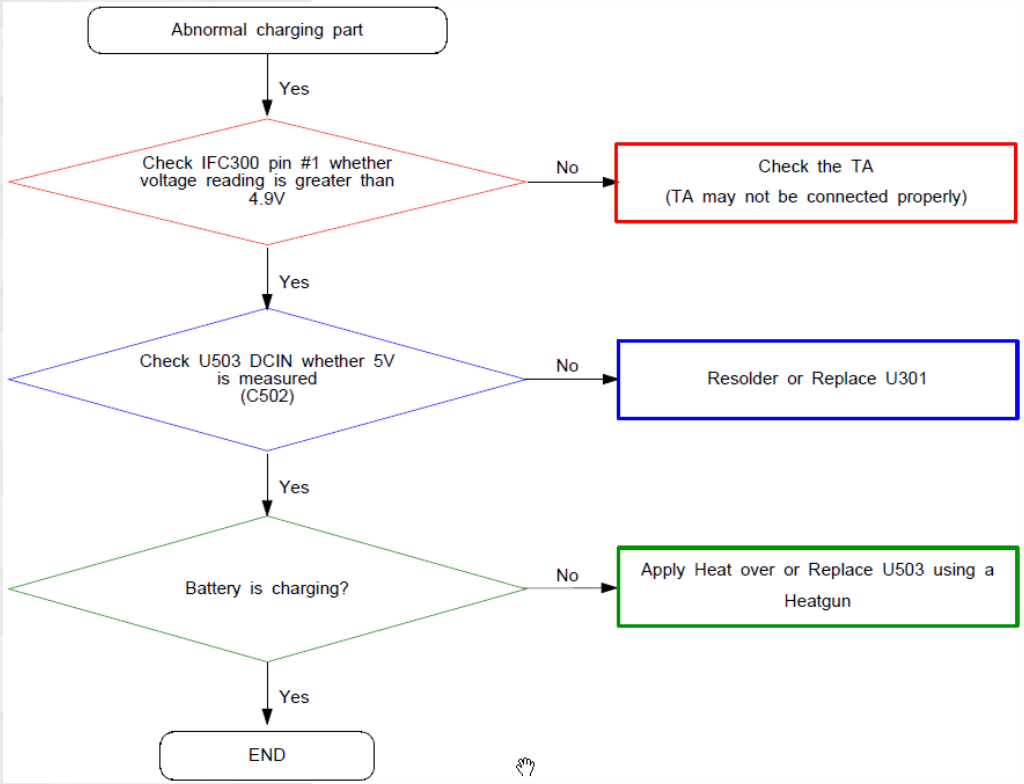
Abnormal charging part
Yes
Check IFC300 pin #1 whether voltage reading is greater than 4.9V
No
Check the TA
(TA may not be connected properly)
Yes
Check U503 DCIN whether 5V is measured (C502)
No
Resolder or Replace U301
Yes
Battery is charging?
No
Apply Heat over or Replace U503 using a Heatgun
Yes
END

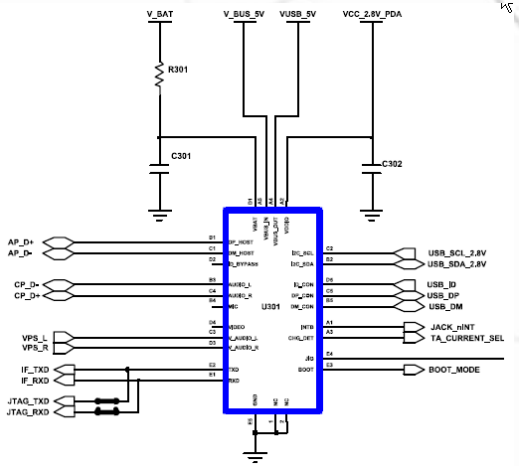
V_BAT
V_BUS_5V
VUSB_5V
VCC_2.8V_PDA
R301
C301
C302
U301
AP_D+
AP_D-
CP_D-
CP_D+
VPS_L
VPS_R
IF_TXD
IF_RXD
JTAG_TXD
JTAG_RXD
USB_SCL_2.8V
USB_SDA_2.8V
USB_ID
USB_DP
USB_DM
JACK_nINT
TA_CURRENT_SEL
BOOT_MODE

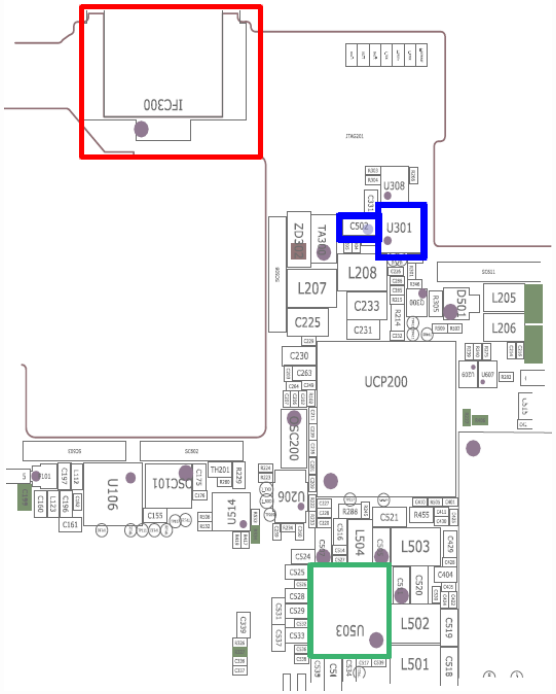
IFC300
U308
C502
U301
L207
L208
C233
C225
L205
L206
UCP200
U106
U206
L503
L502
L501
U503

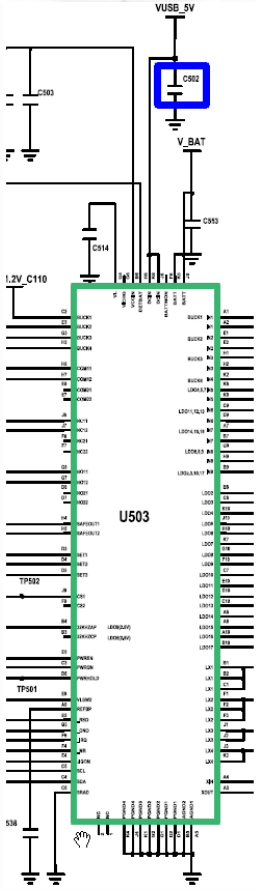
VUSB_5V
C502
V_BAT
C503
C514
C553
U503
TP502
TP501

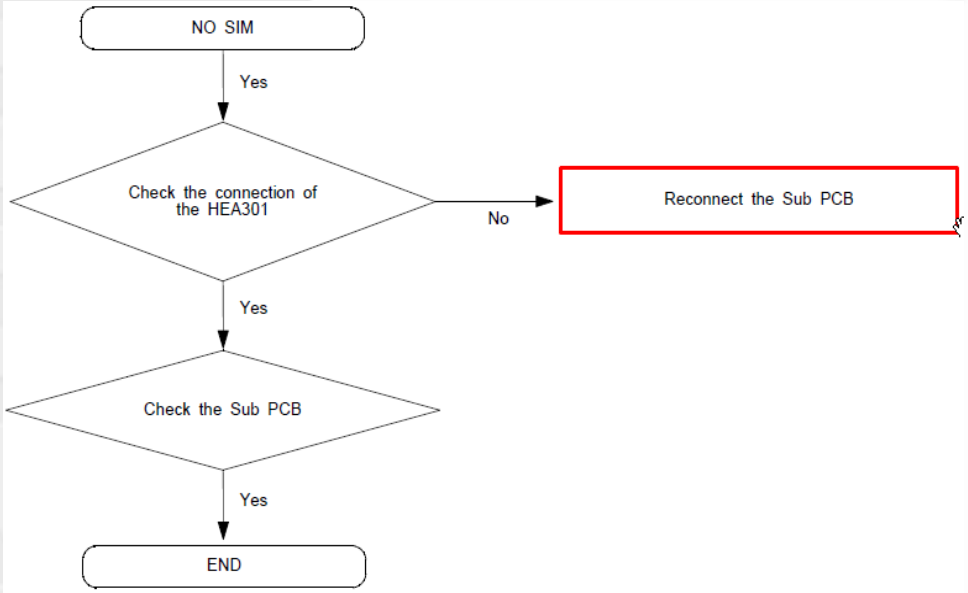
NO SIM
Yes
Check the connection of the HEA301
No
Reconnect the Sub PCB
Yes
Check the Sub PCB
Yes
END

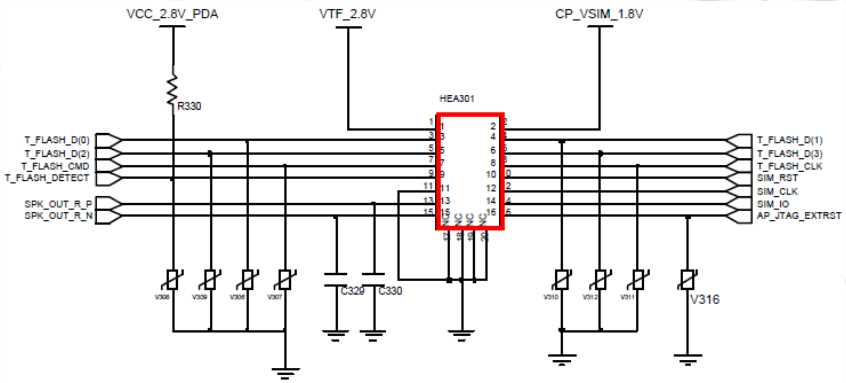
VCC_2.8V_PDA
VTF_2.8V
CP_VSIM_1.8V
R330
HEA301
T_FLASH_D(0)
T_FLASH_D(2)
T_FLASH_CMD
T_FLASH_DETECT
SPK_OUT_R_P
SPK_OUT_R_N
T_FLASH_D(1)
T_FLASH_D(3)
T_FLASH_CLK
SIM_RST
SIM_CLK
SIM_IO
AP_JTAG_EXTRST
C329
C330
V316

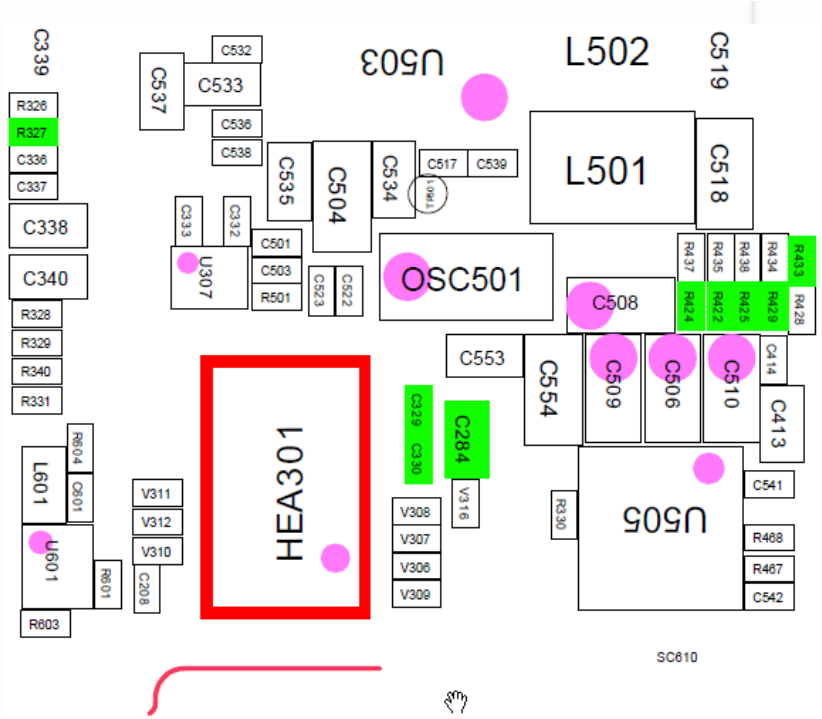
C339
R326
R327
C336
C337
C338
C340
R328
R329
R340
R331
L601
R604
C601
U601
R601
R603
V311
V312
V310
C208
HEA301
C537
C533
C532
C536
C538
U503
C535
C504
C534
C517
C539
L502
L501
C519
C518
C333
C332
U307
C501
C503
R501
C523
C522
OSC501
C508
R437
R435
R438
R434
R433
R424
R422
R425
R429
R428
C553
C554
C509
C506
C510
C414
C413
C329
C330
C284
V316
V308
V307
V306
V309
R330
U505
C541
R468
R467
C542
SC610

Main MIC

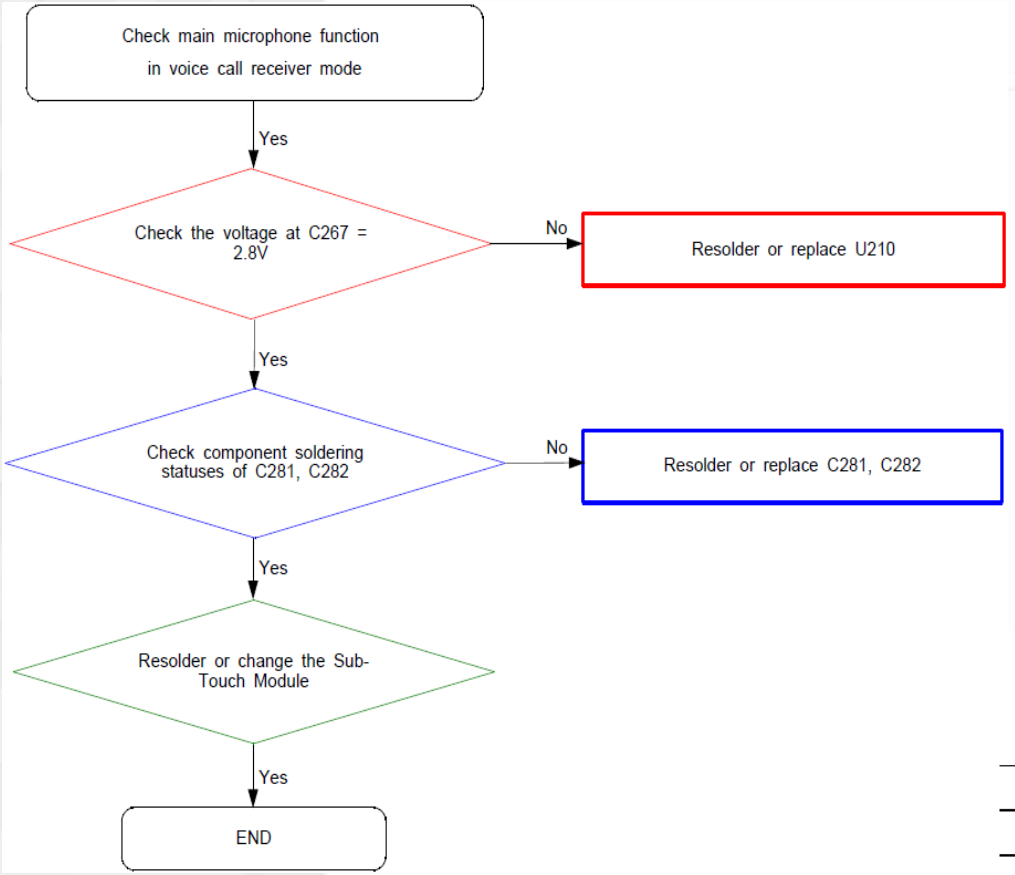
Check main microphone function in voice call receiver mode
Yes
Check the voltage at C267 = 2.8V
No
Resolder or replace U210
Yes
Check component soldering statuses of C281, C282
No
Resolder or replace C281, C282
Yes
Resolder or change the Sub-Touch Module
Yes
END

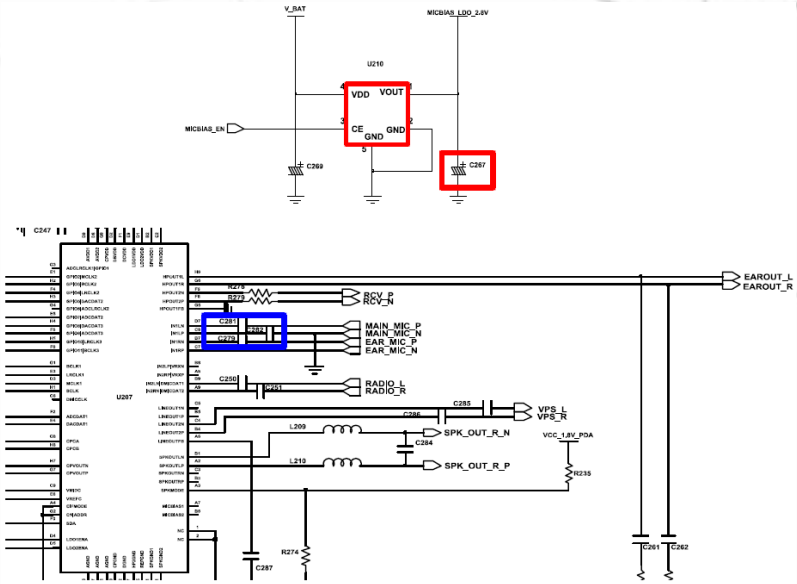
V_BAT
MICBIAS_LDO_2.8V
U210
VDD
VOUT
CE
GND
MICBIAS_EN
C269
C267
U207
EAROUT_L
EAROUT_R
RCV_P
RCV_N
MAIN_MIC_P
MAIN_MIC_N
EAR_MIC_P
EAR_MIC_N
RADIO_L
RADIO_R
VPS_L
VPS_R
SPK_OUT_R_N
SPK_OUT_R_P
VCC_1.8V_PDA
C261
C262

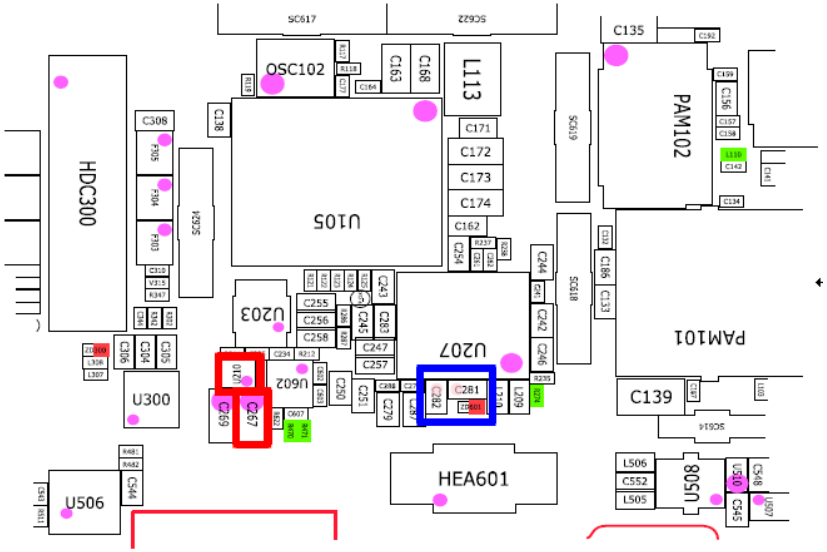
HDC300
OSC102
L113
U105
PAM102
PAM101
U203
U207
U602
U300
U506
HEA601
C139
C135
C281
C282
C267
C269

SPEAKER

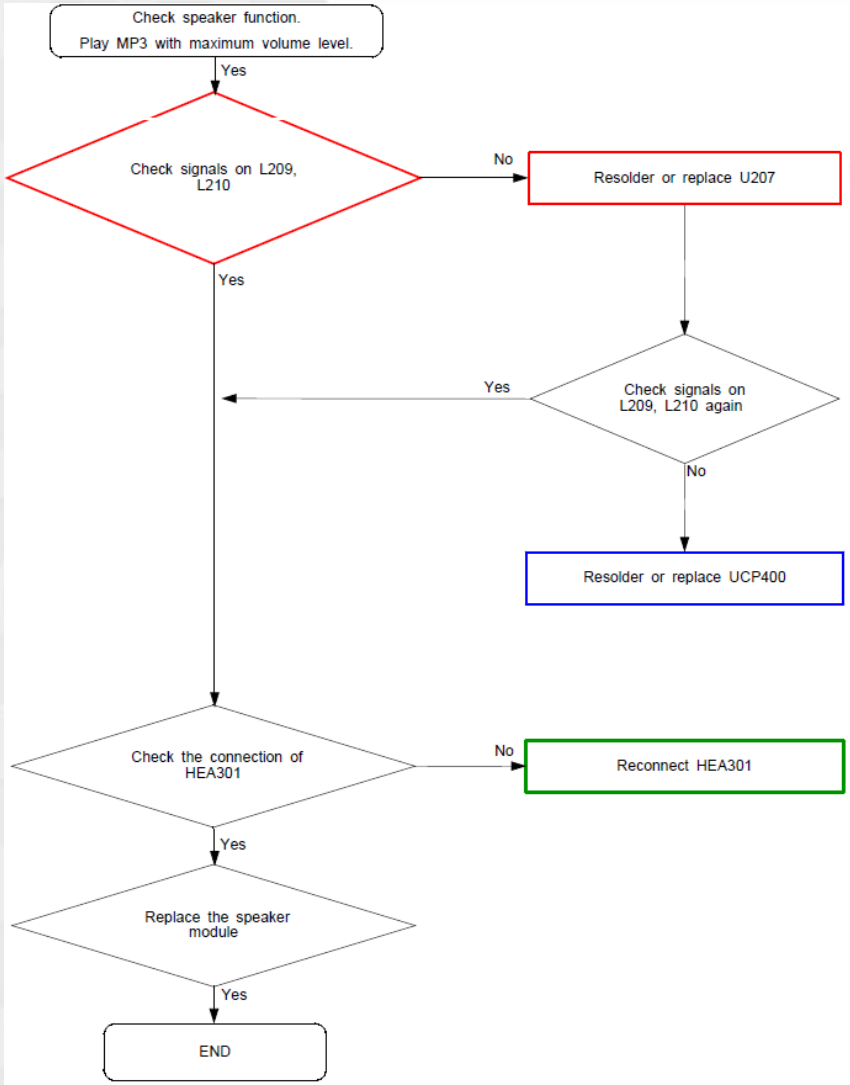
Check speaker function.
Play MP3 with maximum volume level.
Yes
Check signals on L209, L210
No
Resolder or replace U207
Yes
Check signals on L209, L210 again
Yes
No
Resolder or replace UCP400
Check the connection of HEA301
No
Reconnect HEA301
Yes
Replace the speaker module
Yes
END

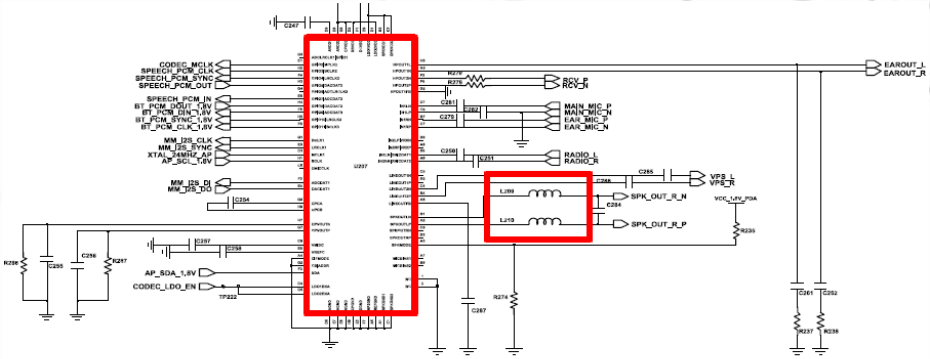

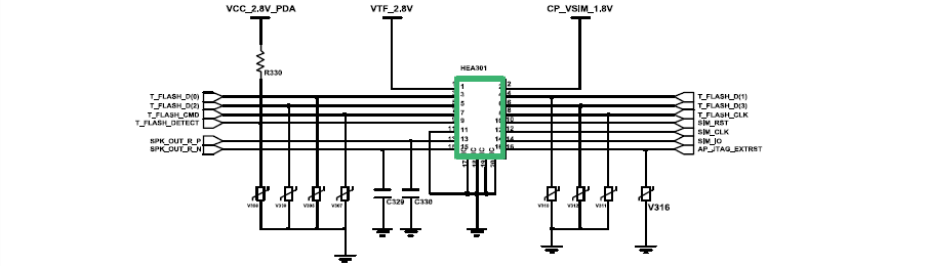
VCC_2.8V_PDA
VTF_2.8V
CP_VSIM_1.8V
HEA301

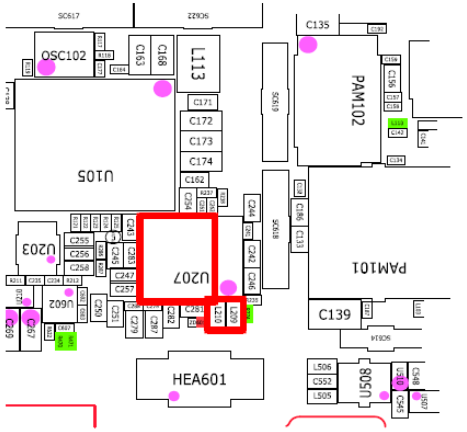
OSC102
L113
PAM102
U105
U207
U203
PAM101
C139
HEA601
U505

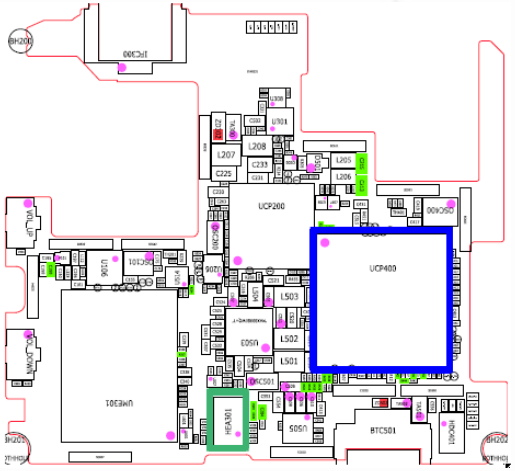
UCP200
UCP400
HEA301
BTC501

RECEIVER

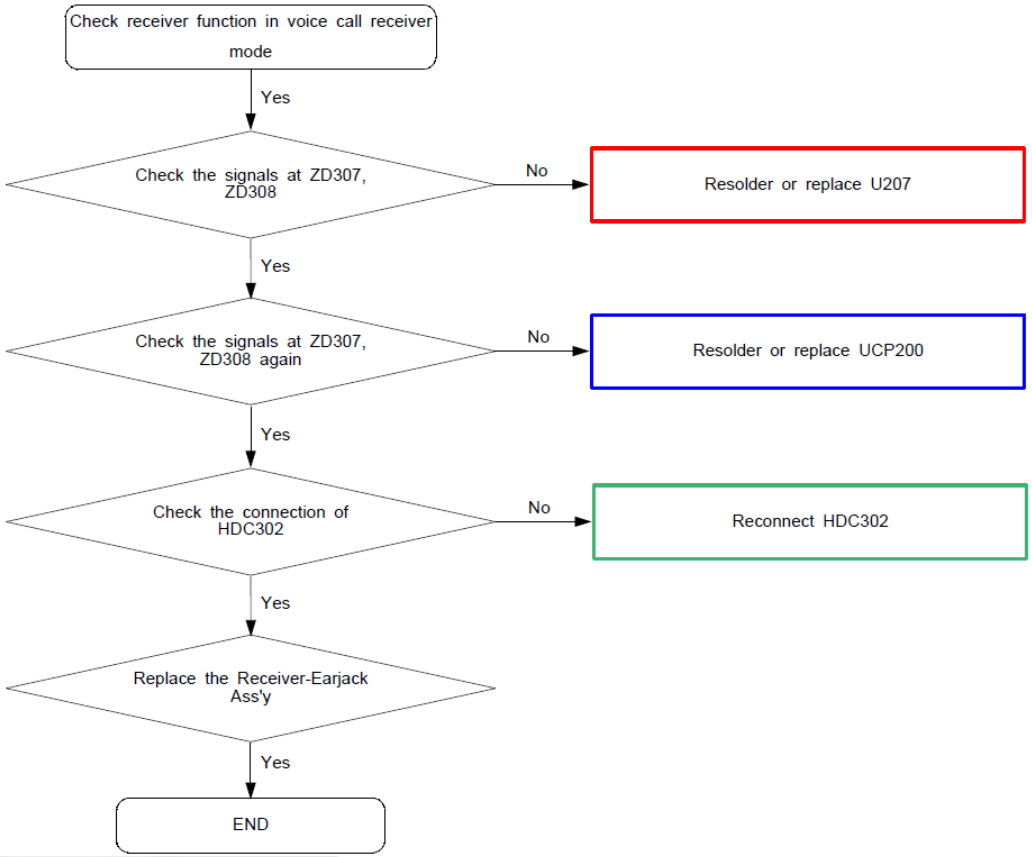
Check receiver function in voice call receiver mode
Yes
Check the signals at ZD307, ZD308
No
Resolder or replace U207
Yes
Check the signals at ZD307, ZD308 again
No
Resolder or replace UCP200
Yes
Check the connection of HDC302
No
Reconnect HDC302
Yes
Replace the Receiver-Earjack Ass'y
Yes
END

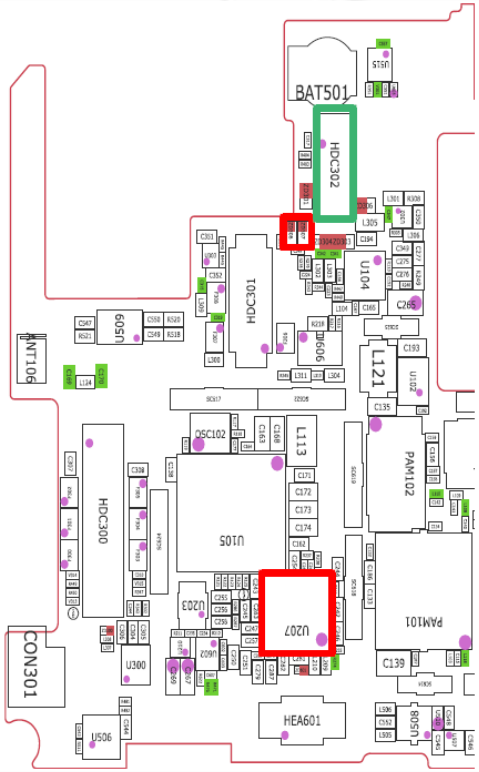
BAT501
HDC302
HDC301
U104
U605
L121
PAM102
U105
HDC300
U207
PAM101
CON301
HEA601
U506

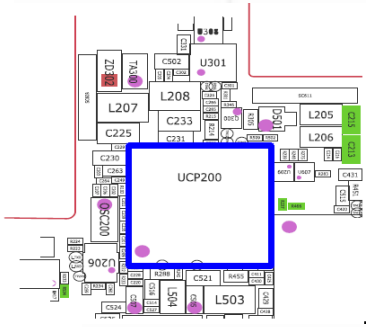
U301
L208
L207
C233
C225
L205
L206
UCP200
L503

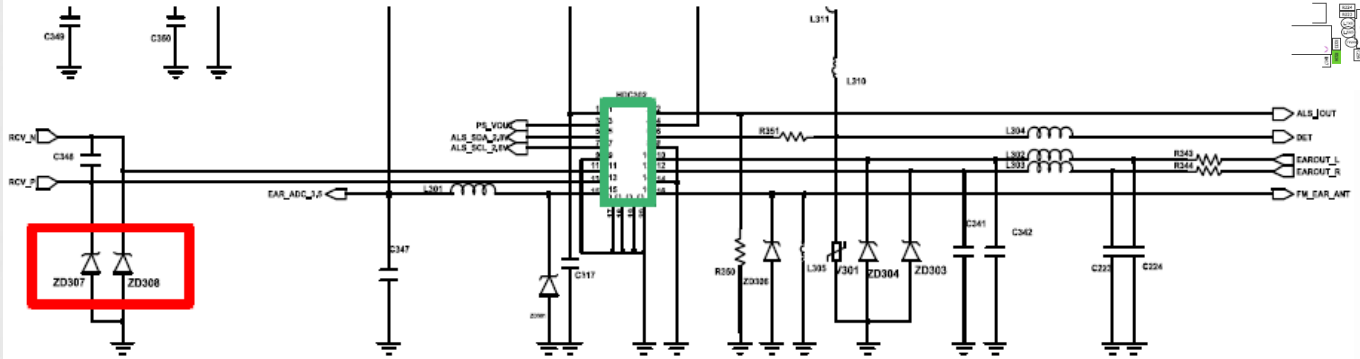
RCV_N
RCV_P
ZD307
ZD308
HDC302
ALS_OUT
DET
EARCUT_L
EARCUT_R
FM_EAR_ANT
ZD304
ZD303

BT/WiFi

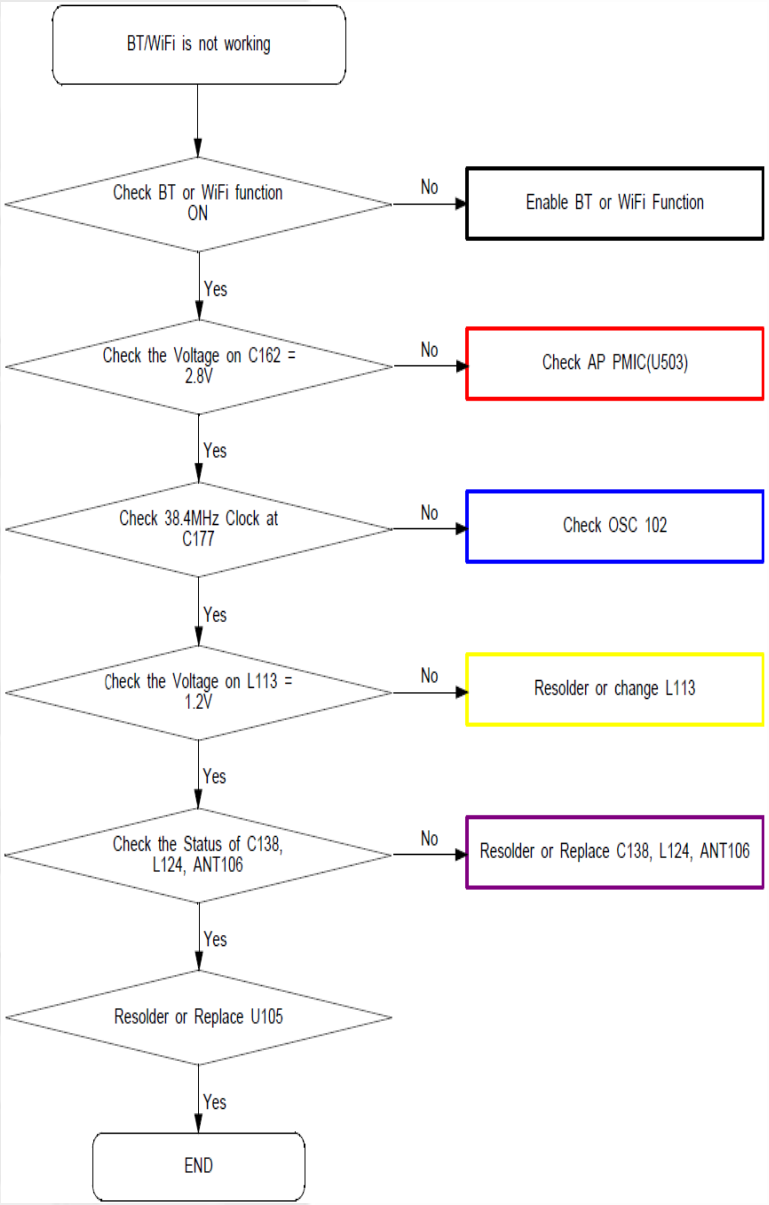
BT/WiFi is not working
Check BT or WiFi function ON
No
Enable BT or WiFi Function
Yes
Check the Voltage on C162 = 2.8V
No
Check AP PMIC(U503)
Yes
Check 38.4MHz Clock at C177
No
Check OSC 102
Yes
Check the Voltage on L113 = 1.2V
No
Resolder or change L113
Yes
Check the Status of C138, L124, ANT106
No
Resolder or Replace C138, L124, ANT106
Yes
Resolder or Replace U105
Yes
END

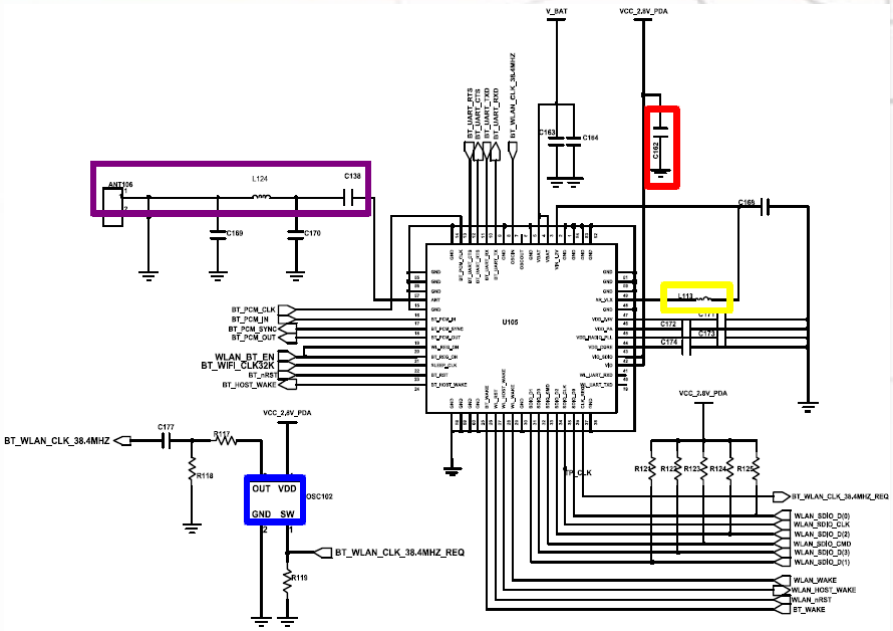
V_BAT
VCC_2.8V_PDA
C163
C164
C138
L124
ANT106
C169
C170
C165
U105
L113
C172
C173
C174
BT_PCM_CLK
BT_PCM_IN
BT_PCM_SYNC
BT_PCM_OUT
WLAN_BT_EN
BT_WIFI_CLK32K
BT_nRST
BT_HOST_WAKE
BT_WLAN_CLK_38.4MHZ
C177
R117
R118
OUT VDD
GND SW
OSC102
BT_WLAN_CLK_38.4MHZ_REQ
R119
R121
R122
R123
R124
R125
BT_WLAN_CLK_38.4MHZ_REQ
WLAN_SDIO_D(0)
WLAN_SDIO_CLK
WLAN_SDIO_D(2)
WLAN_SDIO_CMD
WLAN_SDIO_D(3)
WLAN_SDIO_D(1)
WLAN_WAKE
WLAN_HOST_WAKE
WLAN_nRST
BT_WAKE


ANT106
U509
C547
R521
C550
R520
C549
R518
HDC301
U104
C165
C265
L121
C193
U102
C135
L124
C138
OSC102
C163
C168
L113
C171
C172
C173
C174
C162
PAM102
PAM101
HDC300
U105
U203
U207
U602
U300
C139
CON301

FM RADIO

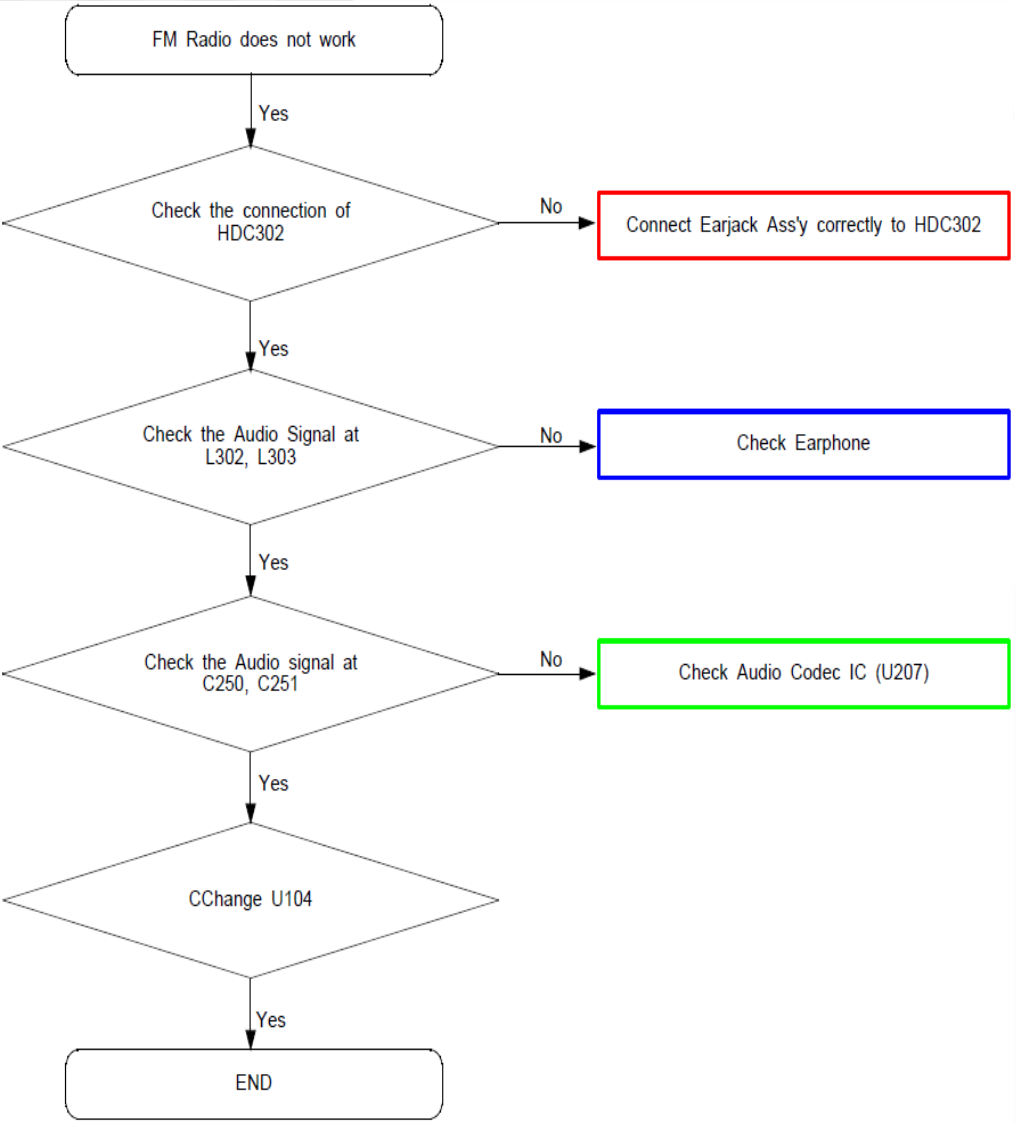
FM Radio does not work
Yes
Check the connection of HDC302
No
Connect Earjack Ass'y correctly to HDC302
Yes
Check the Audio Signal at L302, L303
No
Check Earphone
Yes
Check the Audio signal at C250, C251
No
Check Audio Codec IC (U207)
Yes
CChange U104
Yes
END

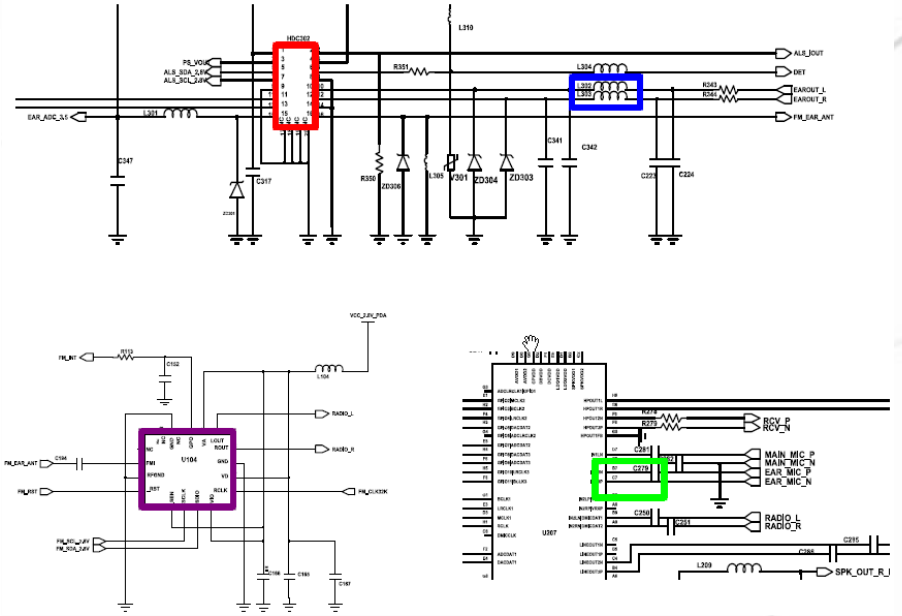

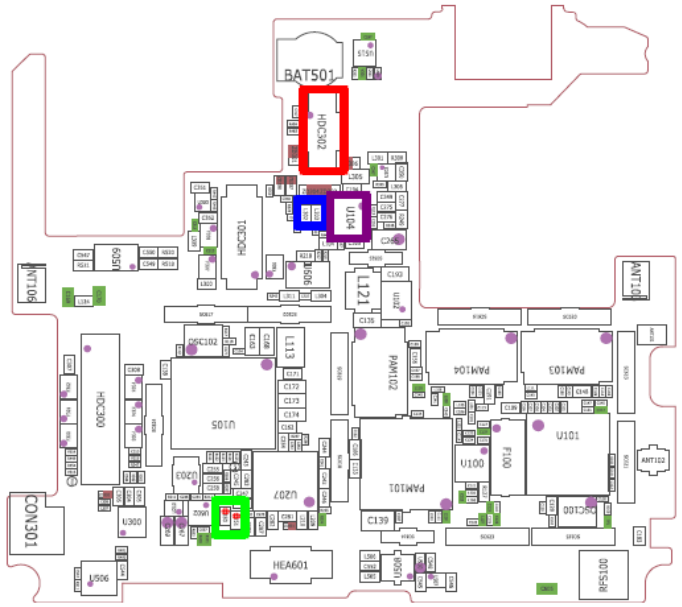
BAT501
HDC302
U104
CON301
HEA601

LCD

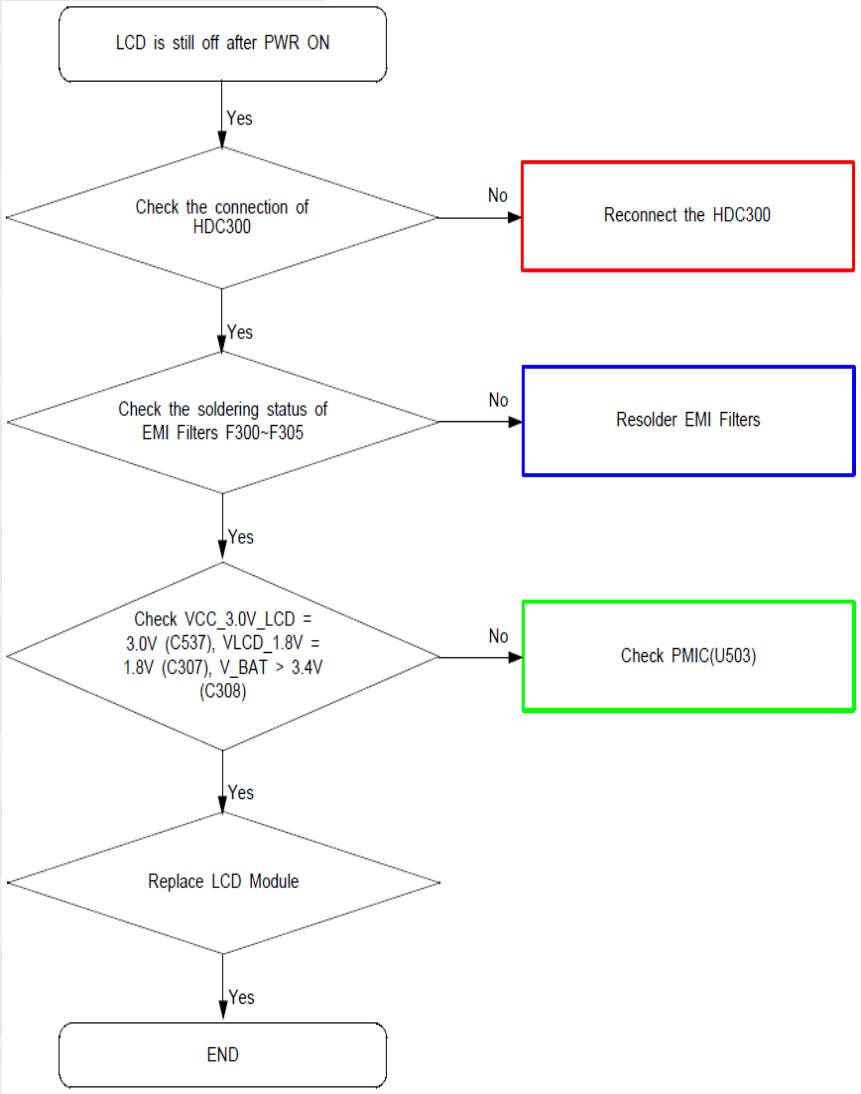
LCD is still off after PWR ON
Yes
Check the connection of HDC300
No
Reconnect the HDC300
Yes
Check the soldering status of EMI Filters F300~F305
No
Resolder EMI Filters
Yes
Check VCC_3.0V_LCD = 3.0V (C537), VLCD_1.8V = 1.8V (C307), V_BAT > 3.4V (C308)
No
Check PMIC(U503)
Yes
Replace LCD Module
Yes
END

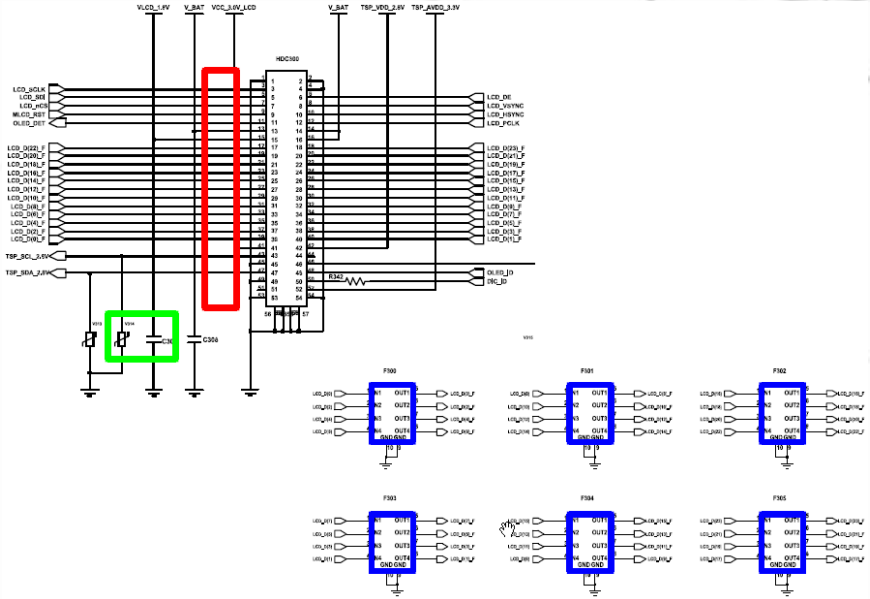

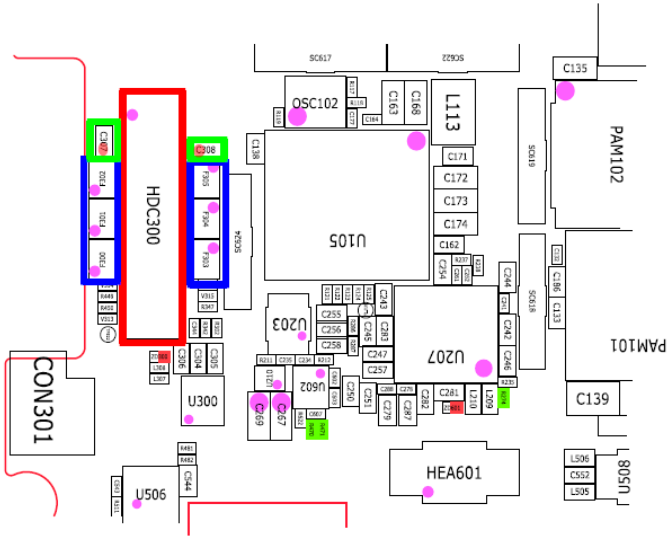
CON301
HDC300
U300
U506
U105
OSC102
L113
U203
U207
U502
HEA601
PAM101
PAM102
C135
C139
U508

TSP

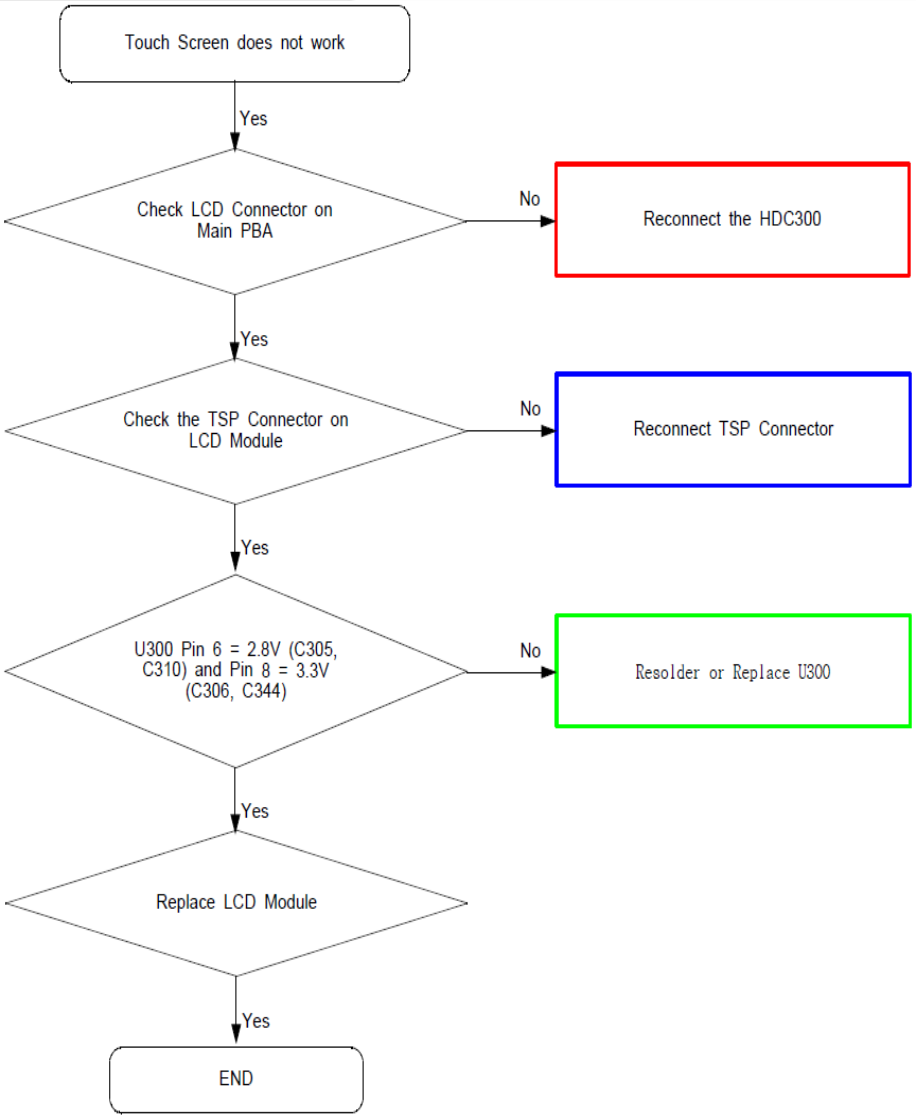
Touch Screen does not work
Yes
Check LCD Connector on Main PBA
No
Reconnect the HDC300
Yes
Check the TSP Connector on LCD Module
No
Reconnect TSP Connector
Yes
U300 Pin 6 = 2.8V (C305, C310) and Pin 8 = 3.3V (C306, C344)
No
Resolder or Replace U300
Yes
Replace LCD Module
Yes
END

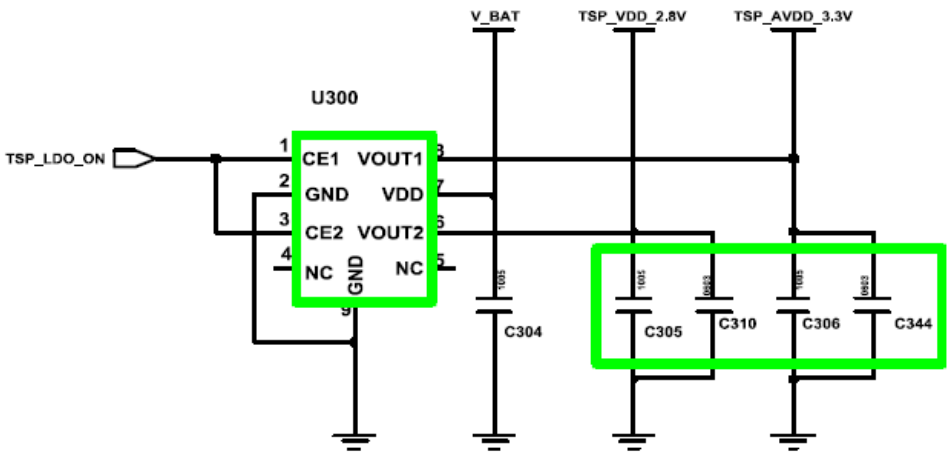
V_BAT
TSP_VDD_2.8V
TSP_AVDD_3.3V
U300
TSP_LDO_ON
CE1
VOUT1
GND
VDD
CE2
VOUT2
NC
GND
NC
C304
C305
C310
C306
C344

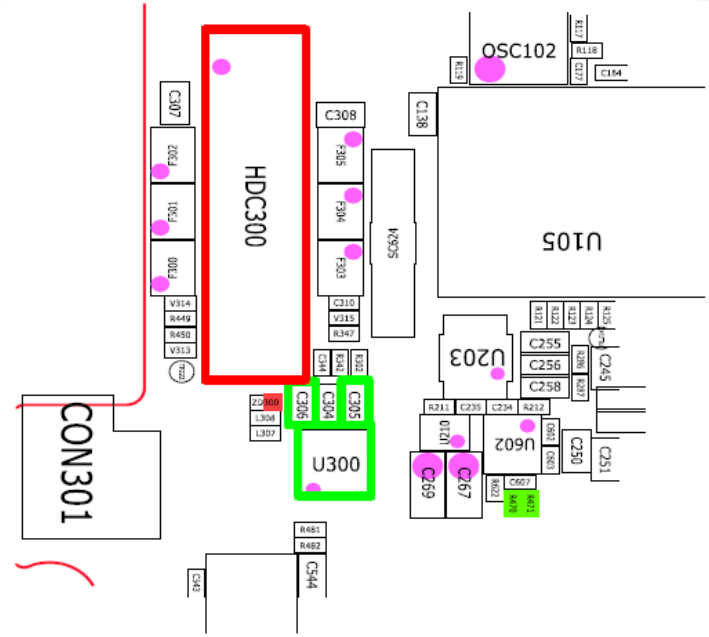
OSC102
C138
U105
HDC300
C307
C308
U203
U602
U300
CON301
C255
C256
C258
C245
C250
C251
C269
C267
C544

5M CAMERA

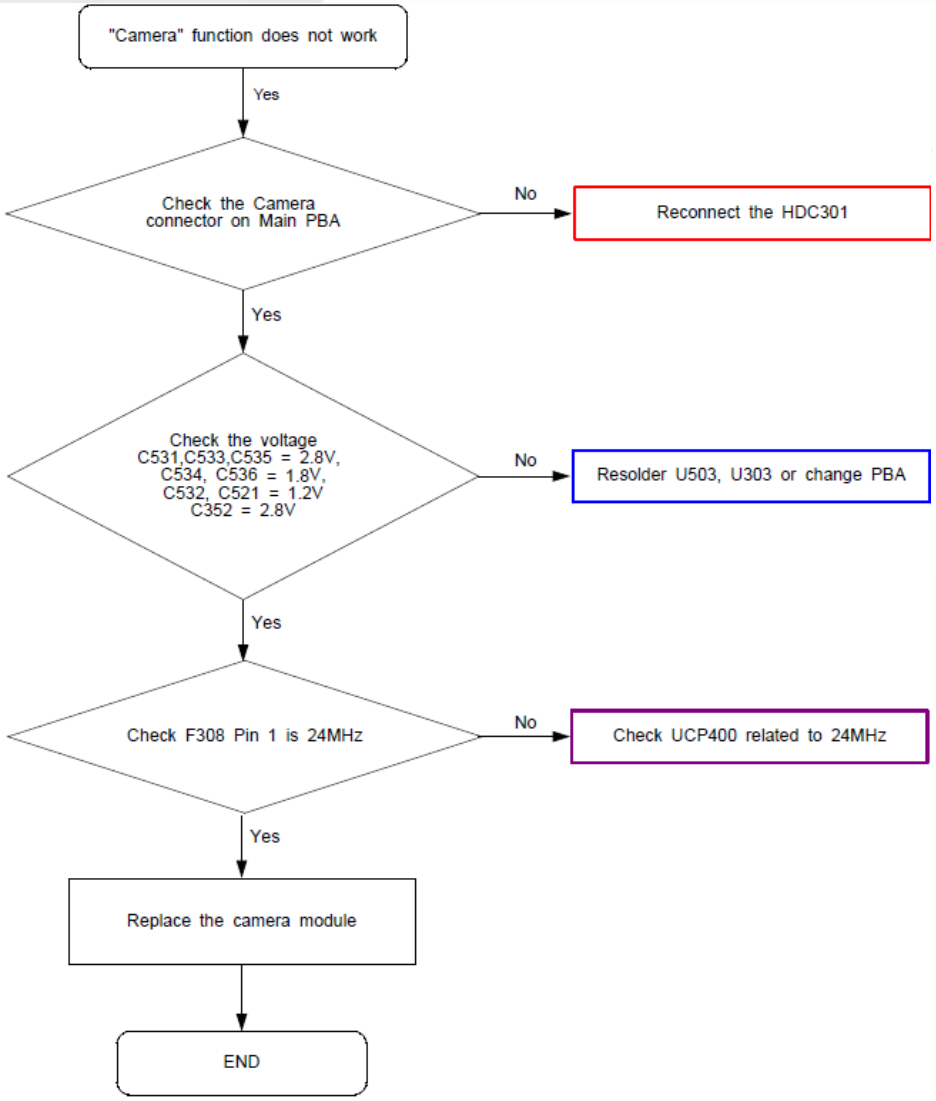
"Camera" function does not work
Yes
Check the Camera connector on Main PBA
No
Reconnect the HDC301
Yes
Check the voltage C531,C533,C535 = 2.8V, C534, C536 = 1.8V, C532, C521 = 1.2V C352 = 2.8V
No
Resolder U503, U303 or change PBA
Yes
Check F308 Pin 1 is 24MHz
No
Check UCP400 related to 24MHz
Yes
Replace the camera module
END

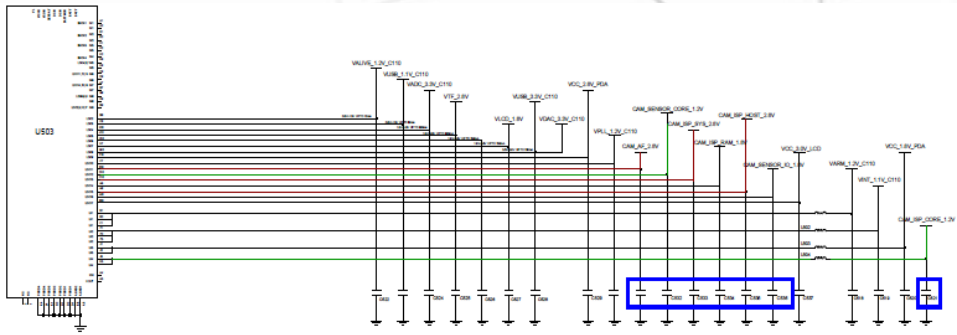
U503

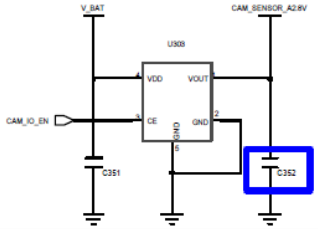
V_BAT
CAM_SENSOR_A2.8V
U303
VDD
VOUT
CE
GND
CAM_IO_EN
C351
C352

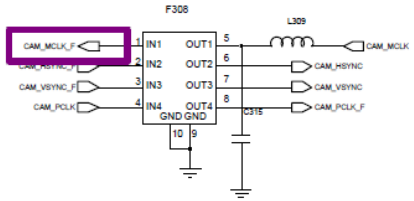
F308
L309
CAM_MCLK_F
CAM_VSYNC_F
CAM_PCLK
IN1
IN2
IN3
IN4
OUT1
OUT2
OUT3
OUT4
GND GND
CAM_MCLK
CAM_HSYNC
CAM_VSYNC
CAM_PCLK_F
C315


HDC301
U509
OSC102
L113

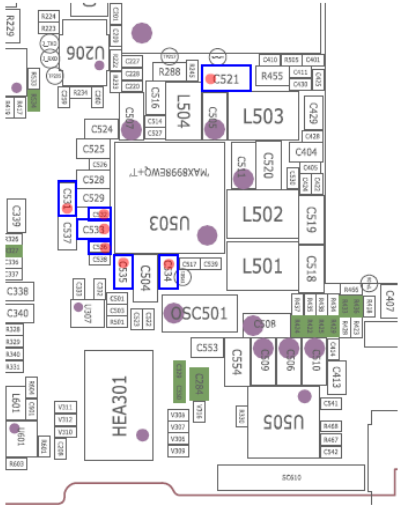
U206
R288
C521
R455
L504
L503
C524
C525
C528
C529
C530
C531
C532
C533
U503
C520
C404
L502
L501
C519
C518
C504
C534
C535
OSC501
C553
C554
C509
C508
C510
C413
U505
HEA301
C329
C338
C340
C407

GSM 850 RX

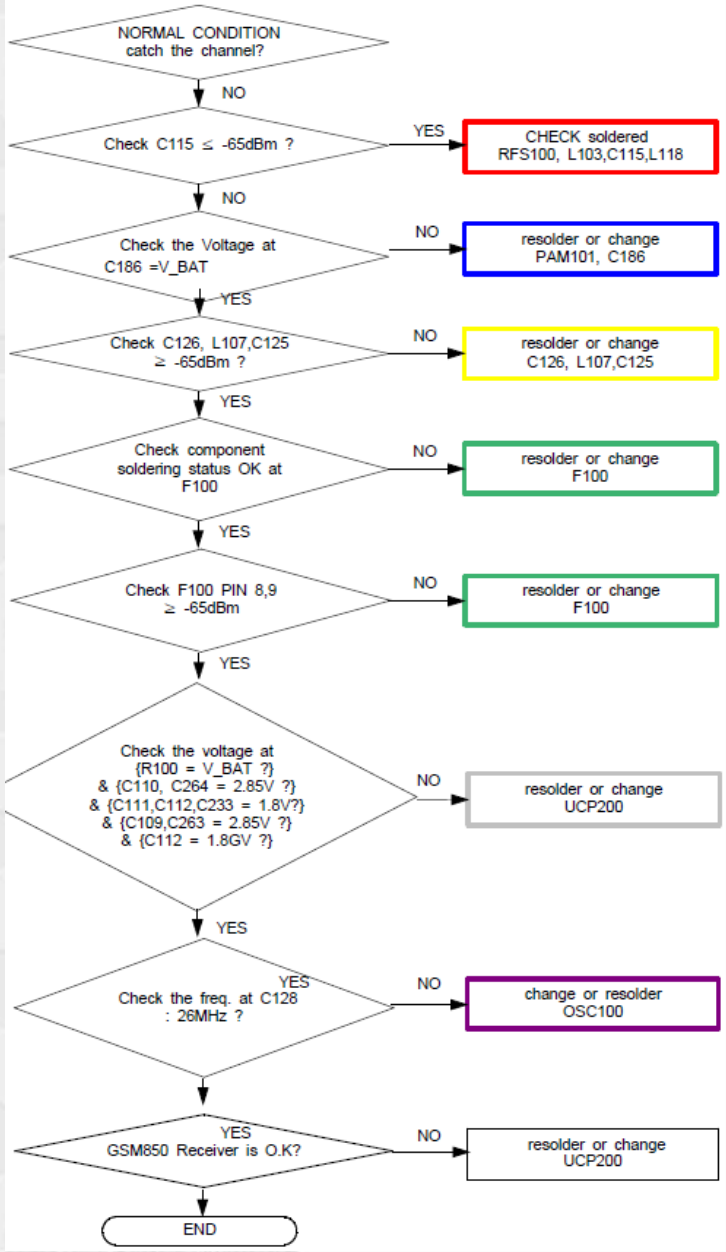
NORMAL CONDITION
catch the channel?
NO
Check C115 ≤ -65dBm ?
YES
CHECK soldered
RFS100, L103,C115,L118
NO
Check the Voltage at
C186 =V_BAT
NO
resolder or change
PAM101, C186
YES
Check C126, L107,C125
≥ -65dBm ?
NO
resolder or change
C126, L107,C125
YES
Check component
soldering status OK at
F100
NO
resolder or change
F100
YES
Check F100 PIN 8,9
≥ -65dBm
NO
resolder or change
F100
YES
Check the voltage at
{R100 = V_BAT ?}
& {C110, C264 = 2.85V ?}
& {C111,C112,C233 = 1.8V?}
& {C109,C263 = 2.85V ?}
& {C112 = 1.8GV ?}
NO
resolder or change
UCP200
YES
Check the freq. at C128
: 26MHz ?
YES
NO
change or resolder
OSC100
YES
GSM850 Receiver is O.K?
NO
resolder or change
UCP200
END

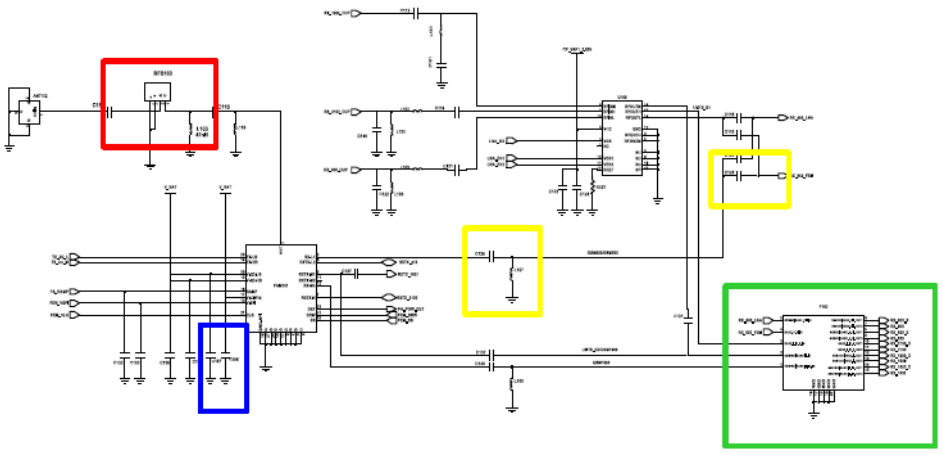

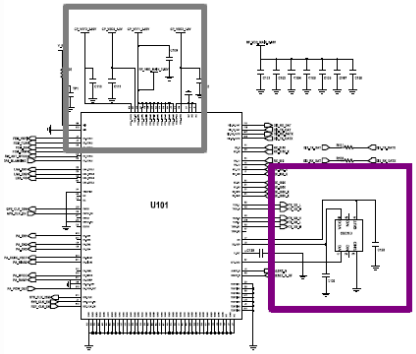
U101

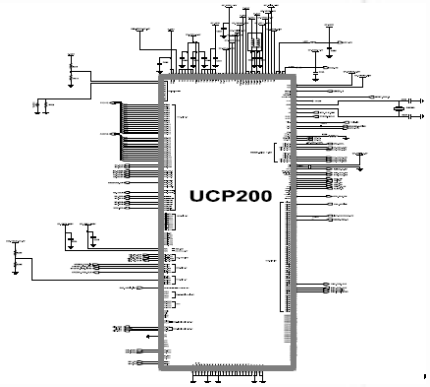
UCP200

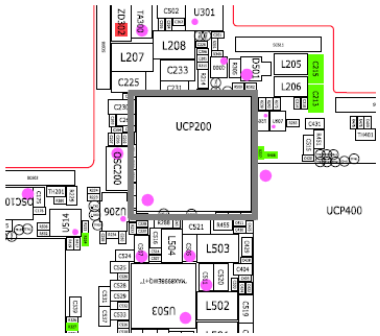
UCP200
UCP400
L208
L207
C233
C225
L205
L206
L503
L502
U503
U301

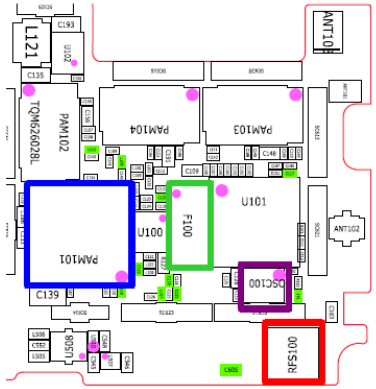
L121
ANT10
PAM102
PAM104
PAM103
U101
U100
F100
PAM101
OSC100
RFS100
ANT102
C139

GSM 1800 RX

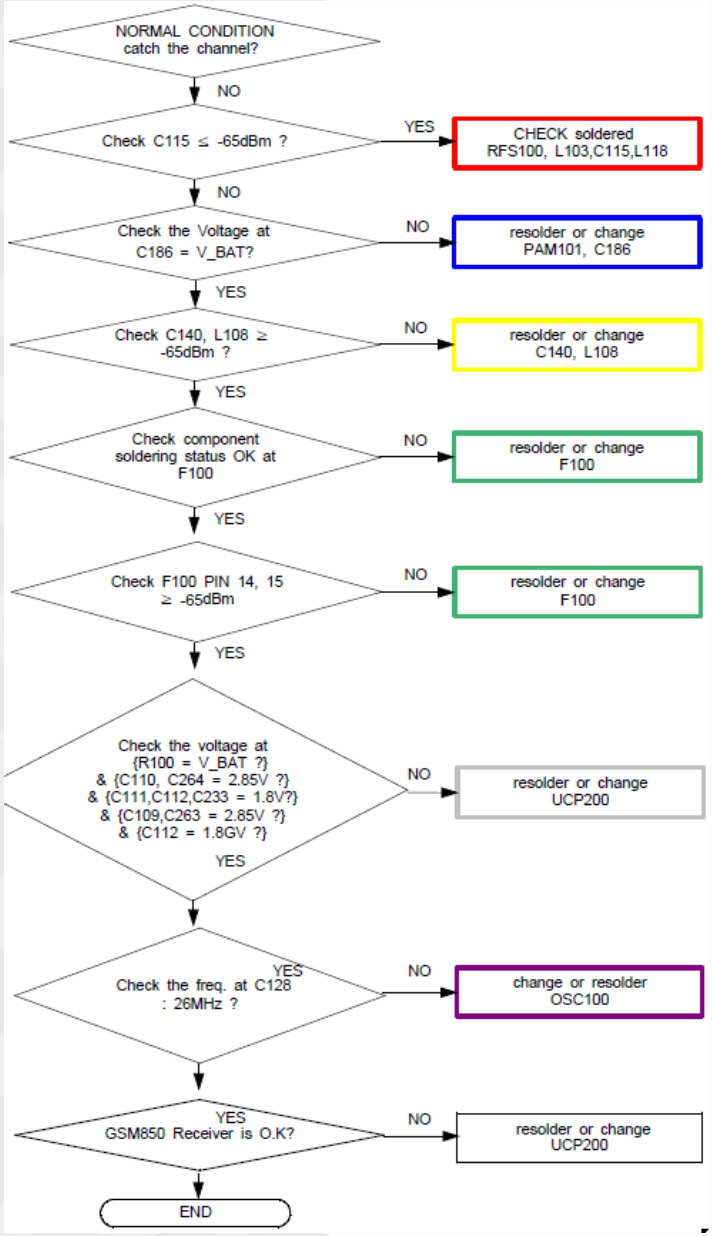
NORMAL CONDITION catch the channel?
NO
Check C115 ≤ -65dBm ?
YES
CHECK soldered RFS100, L103,C115,L118
NO
Check the Voltage at C186 = V_BAT?
NO
resolder or change PAM101, C186
YES
Check C140, L108 ≥ -65dBm ?
NO
resolder or change C140, L108
YES
Check component soldering status OK at F100
NO
resolder or change F100
YES
Check F100 PIN 14, 15 ≥ -65dBm
NO
resolder or change F100
YES
Check the voltage at {R100 = V_BAT ?} & {C110, C264 = 2.85V ?} & {C111,C112,C233 = 1.8V?} & {C109,C263 = 2.85V ?} & {C112 = 1.8GV ?}
NO
resolder or change UCP200
YES
Check the freq. at C128 : 26MHz ?
YES
NO
change or resolder OSC100
YES
GSM850 Receiver is O.K?
NO
resolder or change UCP200
END

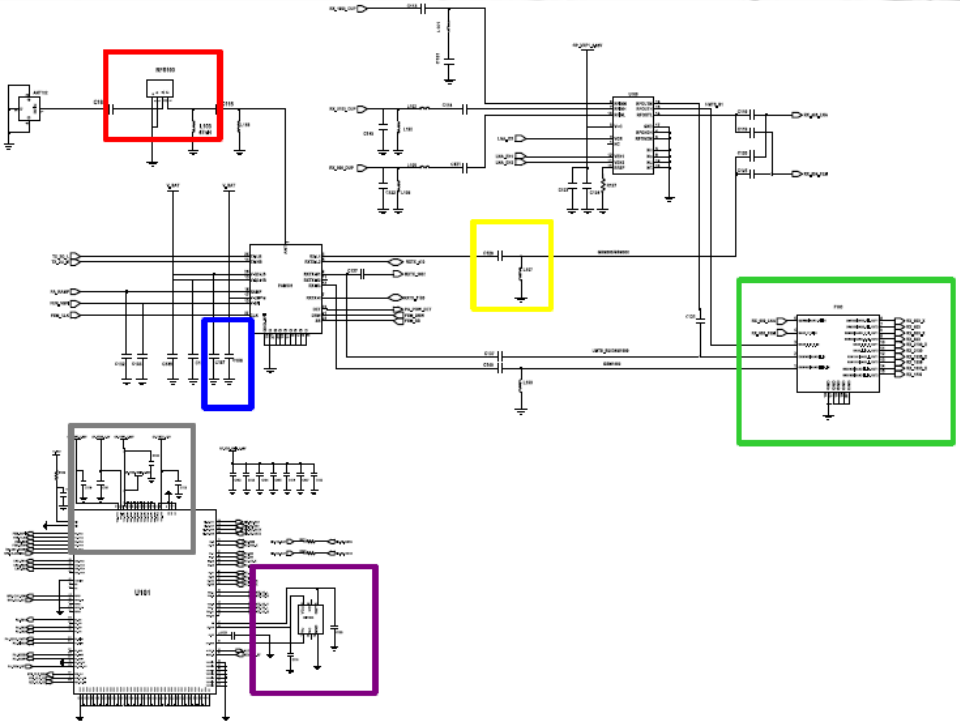


UCP200
UCP400
L207
L208
L205
L206
C225
C233
L503
L502
U503

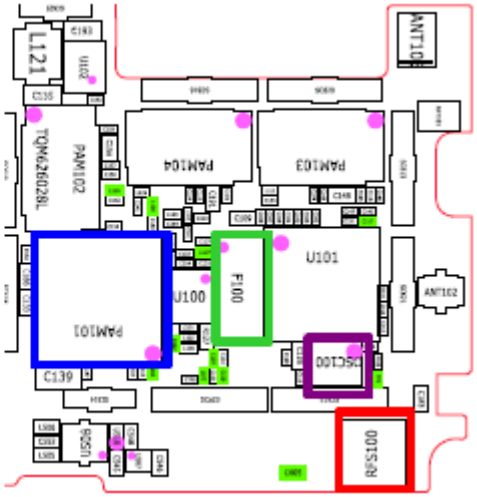
PAM101
PAM102
PAM103
PAM104
U101
U100
F100
OSC100
RFS100
ANT102
C139

WCDMA Band1 RX

CONTINUOUS RX ON
RF INPUT : 10700CH
AMP : -50dBm

NORMAL CONDITION catch the channel?

NO

Check C115 ≤ -65dBm ? — YES → CHECK soldered RFS100, L103, C115, L118

NO

Check the Voltage at C186 = V_BAT ? — NO → resolder or change C186, PAM101

YES

PAM101 CHECK pin7 or C141, L109 ≥ -65dBm ? — NO → resolder or change PAM101, C141, L109

YES

Check component soldering status OK at PAM104, C185, L120, L102, C114 ? — NO → resolder or change PAM104, C185, L120, L102, C114

YES

Check component soldering status OK at U100, F100 ? F100 PIN 10, 11 ≥ -65dBm — NO → resolder or change U100, F100

YES

Check the voltage at {R100 = V_BAT ?} & {C110, C264 = 2.85V ?} & {C111,C112,C233 = 1.8V?} & {C109,C263 = 2.85V ?} & {C112 = 1.8GV ?} — NO → resolder or change UCP200

YES

Check the freq. at OSC100 :26MHz ? — NO → change or resolder OSC100

YES

WCDMA BAND1 Receiver is O.K? — NO → resolder or change UCSP200

YES

END

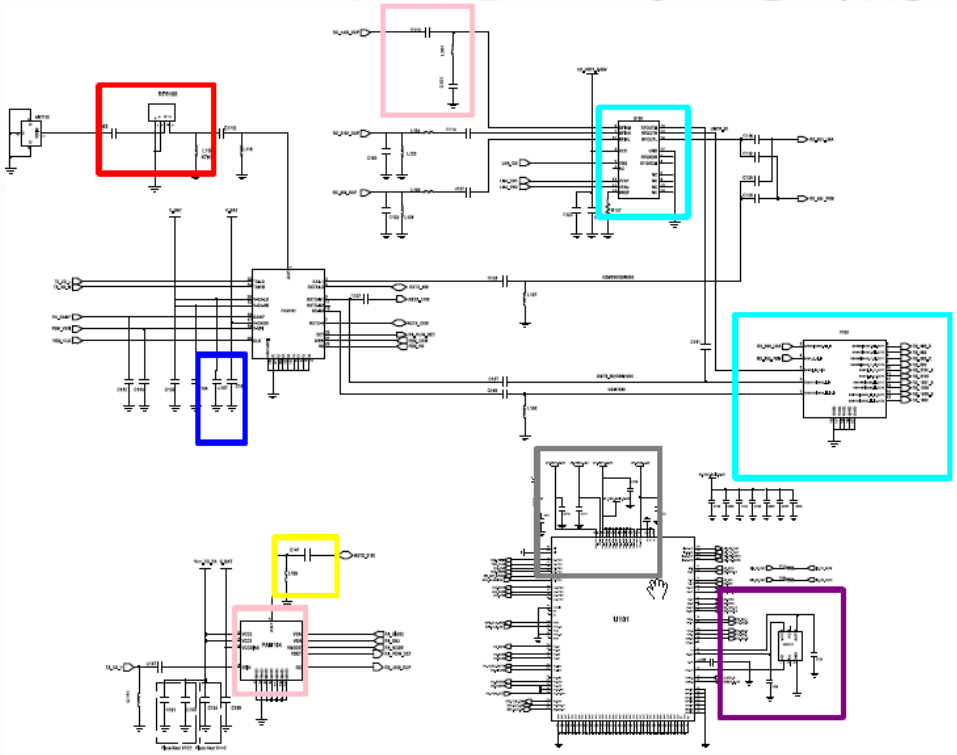

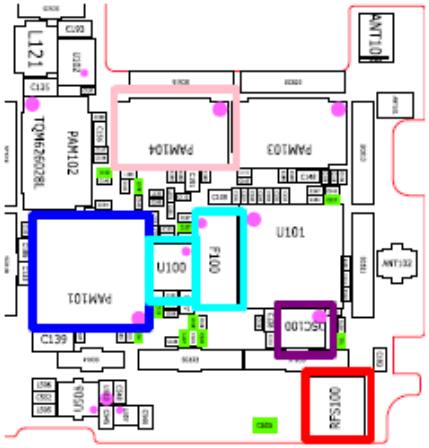

WCDMA Band2 /GSM 1900 RX

CONTINUOUS RX ON
RF INPUT : 9800CH
AMP : -50dBm

NORMAL CONDITION
catch the channel?

NO

Check C115 ≤ -65dBm ? — YES → CHECK soldered RFS100, L103, C115, L118

NO

Check the Voltage at C186 = V_BAT ? — NO → resolder or change C186, PAM101

YES

PAM101 CHECK pin9 or C127, C143, L111 ≥ -65dBm ? — NO → resolder or change PAM101, C127, C143, L111

YES

Check component soldering status OK at PAM103, C113, L101, C101 ? Check C131≥-65dBm ? — NO → resolder or change PAM103, C113, L101, C101, C131

YES

Check component soldering status OK at U100, F100 ? F100 PIN 12, 13 ≥ -65dBm — NO → resolder or change U100, F100

YES

Check the voltage at {R100 = V_BAT ?} & {C110, C264 = 2.85V ?} & {C111,C112,C233 = 1.8V?} & {C109,C263 = 2.85V ?} & {C112 = 1.8GV ?} — NO → resolder or change UCP200

YES

Check the freq. at OSC100 :26MHz ? — NO → change or resolder OSC100

YES

WCDMA BAND2, PCS1900 Receiver is O.K? — NO → resolder or change UCSP200

YES

END

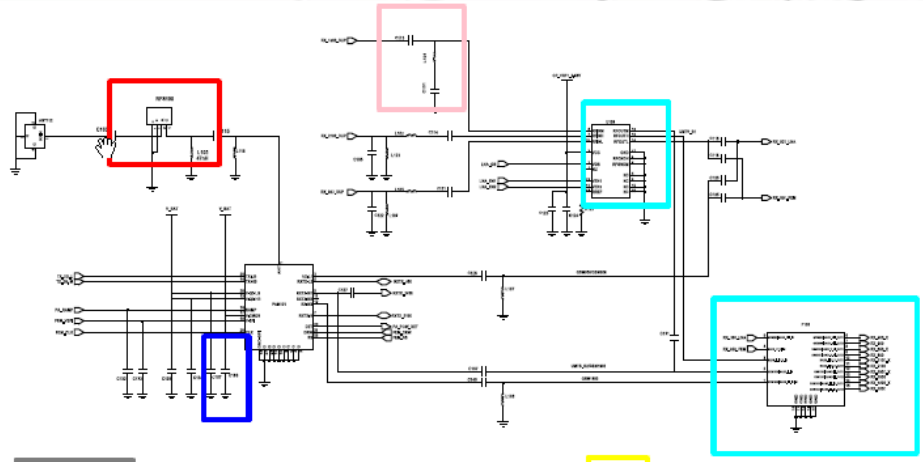

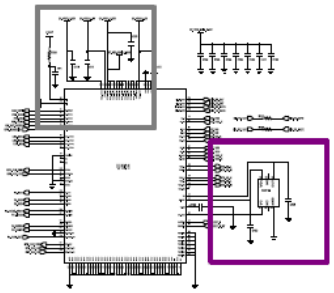

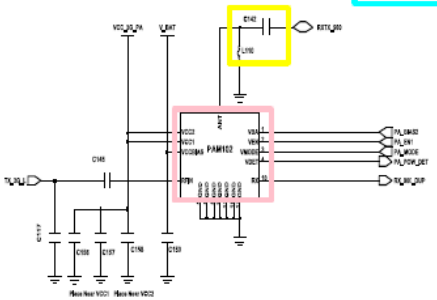

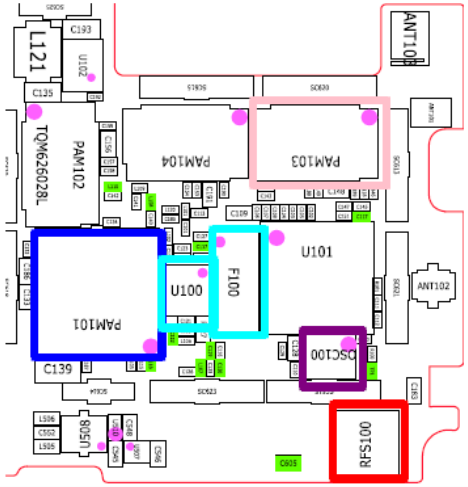

WCDMA Band8 /GSM 900 RX

CONTINUOUS RX ON
RF INPUT : 9800CH
AMP : -50dBm

NORMAL CONDITION catch the channel?

NO

Check C115 ≤ -65dBm ? — YES → CHECK soldered RFS100, L103, C115, L118

NO

Check the Voltage at C186 = V_BAT ? — NO → resolder or change C186, PAM101

YES

PAM101 CHECK pin5 or C142, L110 ≥ -65dBm ? — NO → resolder or change PAM101, C142, L110

YES

Check component soldering status OK at PAM102, C122, L106, L105, C121 ? Check C116≥-65dBm ? — NO → resolder or change PAM102, C122, L106, L105, C121, C116

YES

Check component soldering status OK at U100, F100 ? F100 PIN 6, 7 ≥ -65dBm — NO → resolder or change U100, F100

YES

Check the voltage at {R100 = V_BAT ?} & {C110, C264 = 2.85V ?} & {C111,C112,C233 = 1.8V?} & {C109,C263 = 2.85V ?} & {C112 = 1.8GV ?} — NO → resolder or change UCP200

YES

Check the freq. at OSC100 :26MHz ? — NO → change or resolder OSC100

YES

WCDMA BAND8, GSM900 Receiver is O.K? — NO → resolder or change UCSP200

YES

END

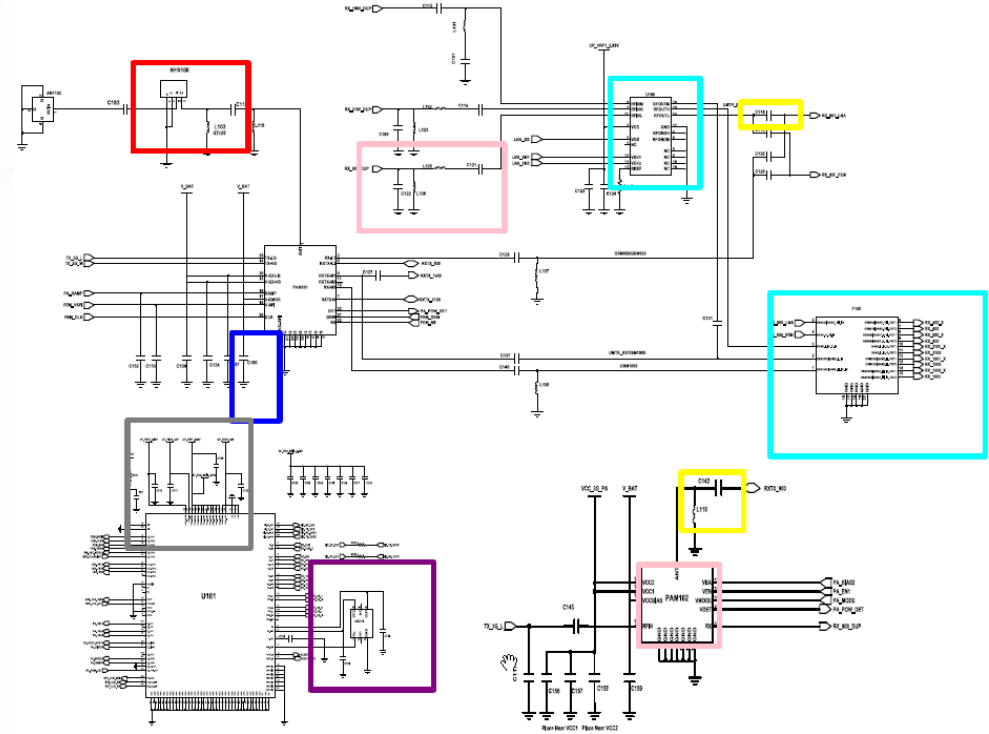

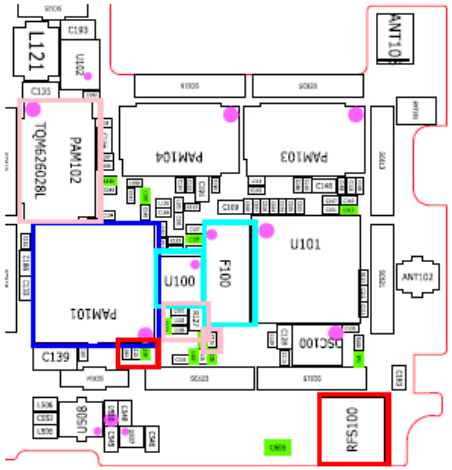

GSM 850 / GSM 900 TX

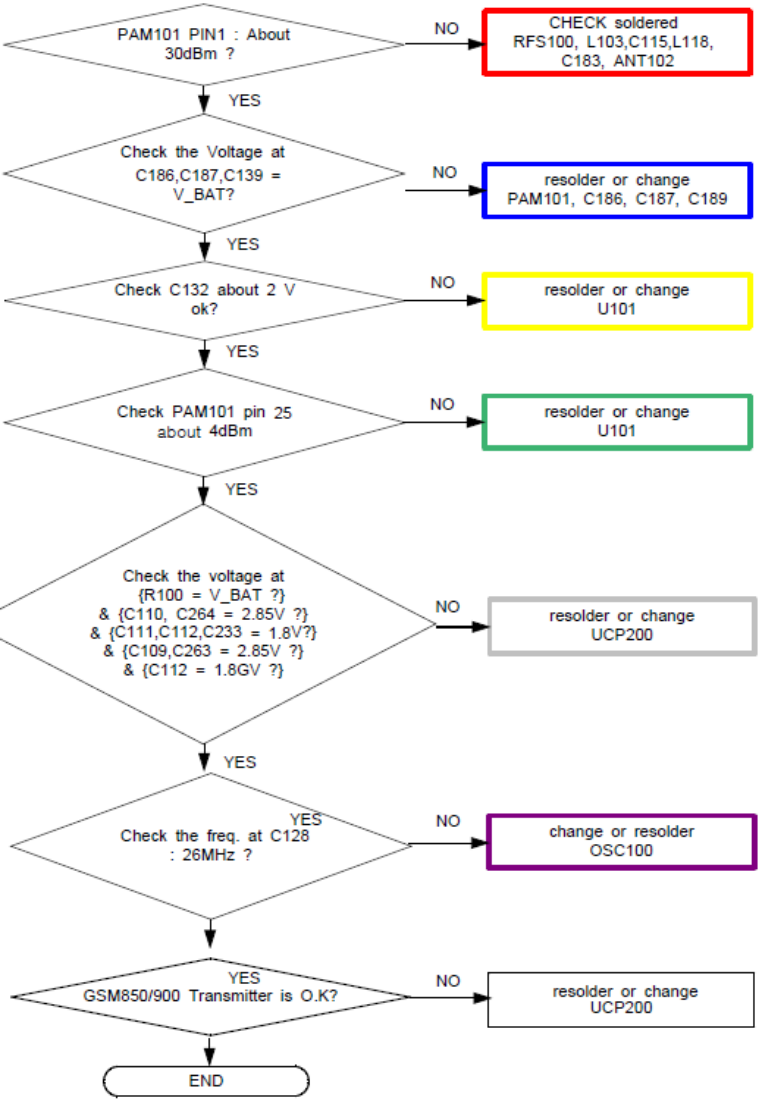

CONTINOUS TX ON CONDITION
TX POWER DAC:14500 CODE APPLIED
GSM850 CH : 190
GSM900 CH : 62
RBW : 100KHz
VBW : 100KHz
SPAN : 10MHz
REF LEV. : 10dBm
ATT. : 20dB

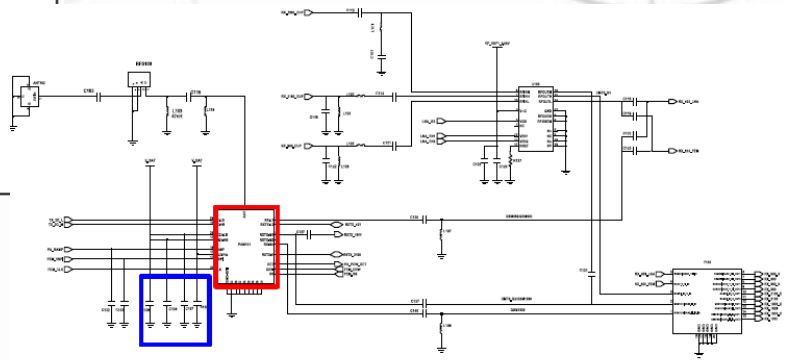

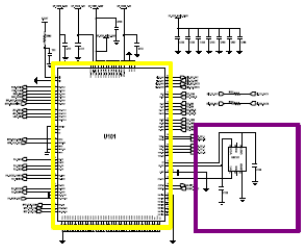

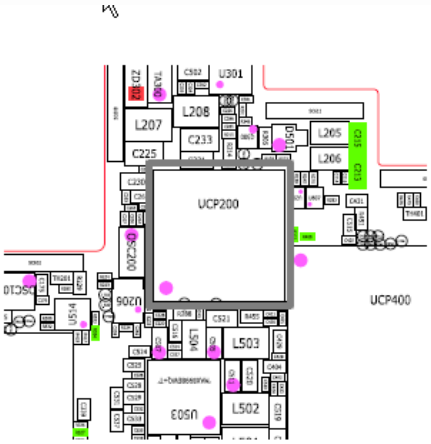

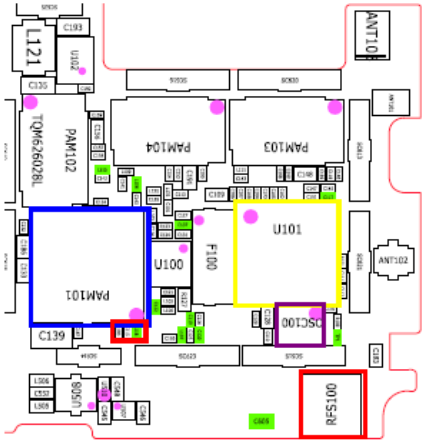

DSC/PCS TX

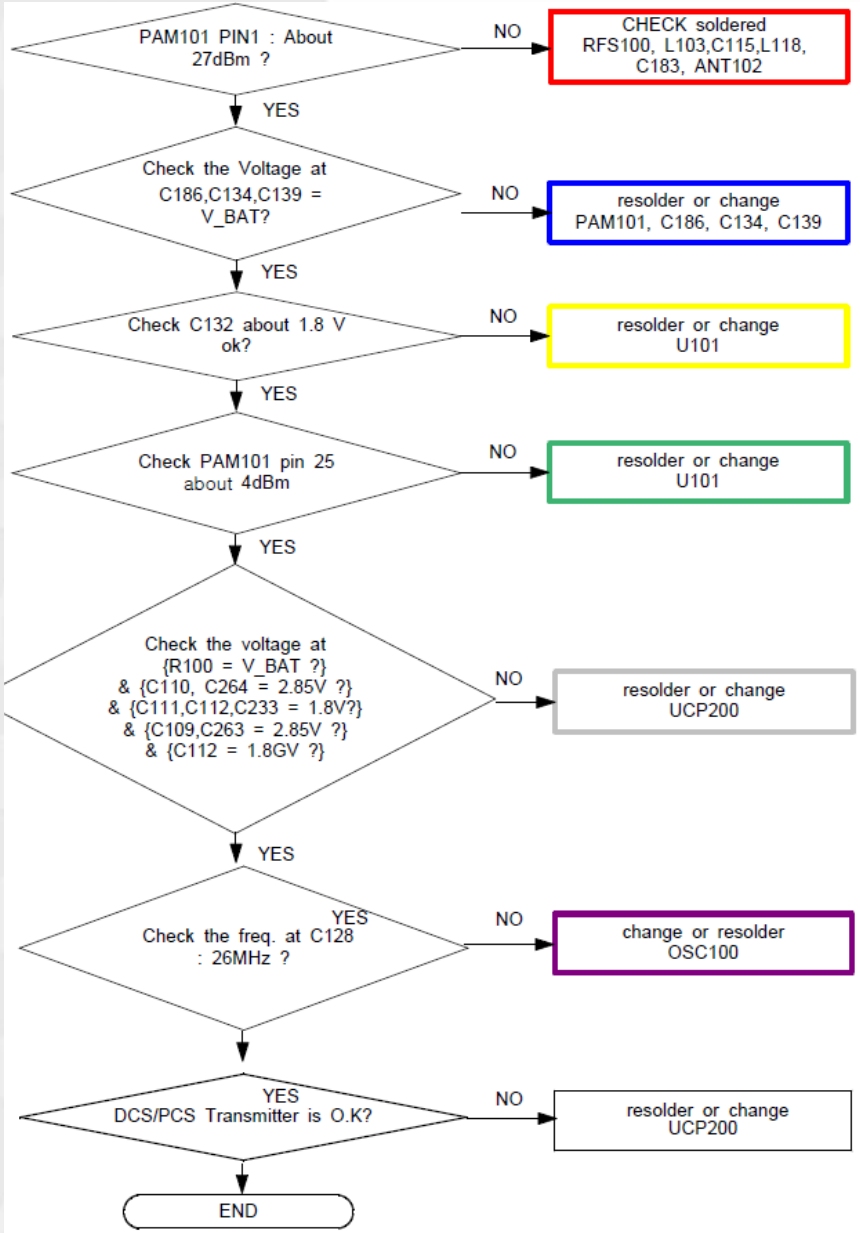
PAM101 PIN1 : About 27dBm ?
NO
CHECK soldered RFS100, L103,C115,L118, C183, ANT102
YES
Check the Voltage at C186,C134,C139 = V_BAT?
NO
resolder or change PAM101, C186, C134, C139
YES
Check C132 about 1.8 V ok?
NO
resolder or change U101
YES
Check PAM101 pin 25 about 4dBm
NO
resolder or change U101
YES
Check the voltage at {R100 = V_BAT ?} & {C110, C264 = 2.85V ?} & {C111,C112,C233 = 1.8V?} & {C109,C263 = 2.85V ?} & {C112 = 1.8GV ?}
NO
resolder or change UCP200
YES
Check the freq. at C128 : 26MHz ?
NO
change or resolder OSC100
YES
DCS/PCS Transmitter is O.K?
NO
resolder or change UCP200
END

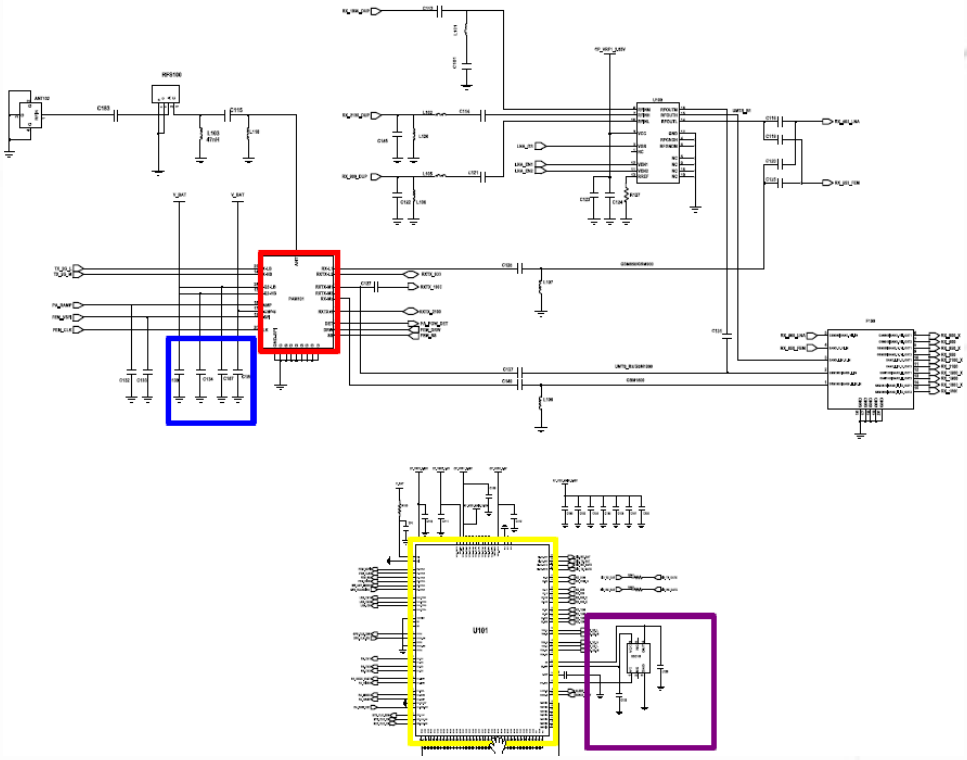


UCP200
UCP400
L207
L208
L233
L265
L206
L503
L502
U301
U503

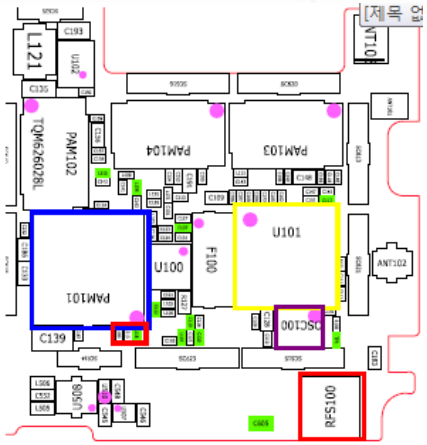
L121
TQM626028L
PAM102
PAM104
PAM103
U101
U100
F100
PAM101
OSC100
ANT102
C139
RFS100

WCDMA Band1 TX

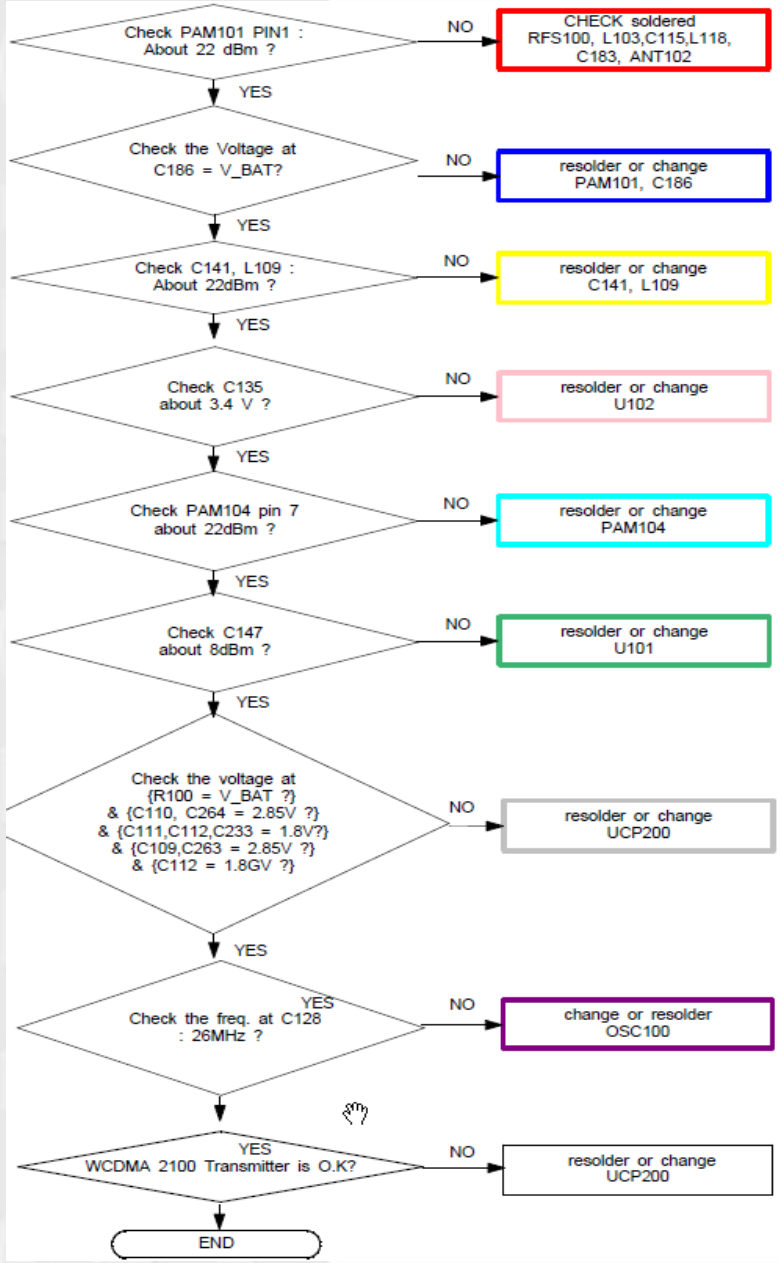

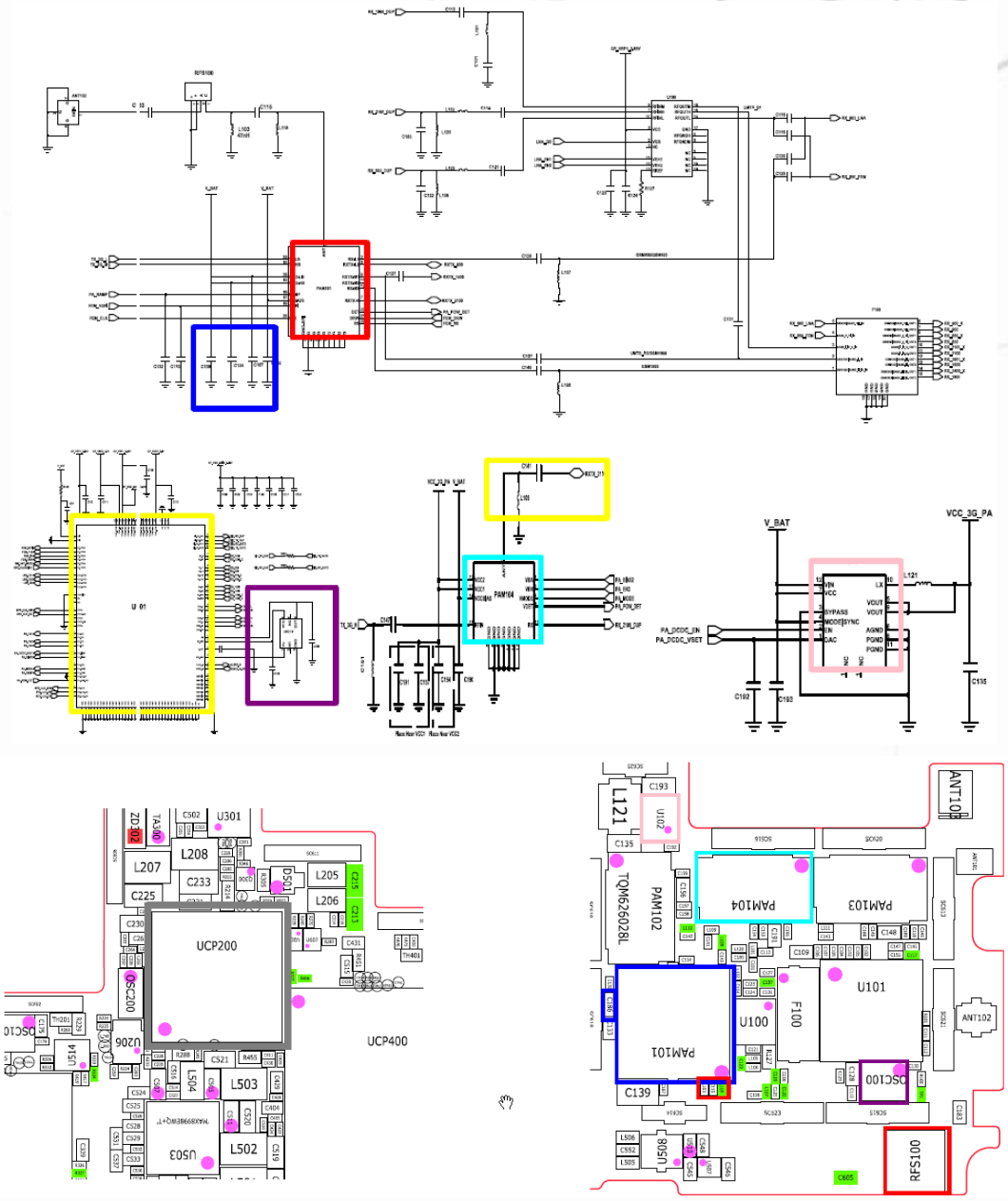

WCDMA Band2 TX

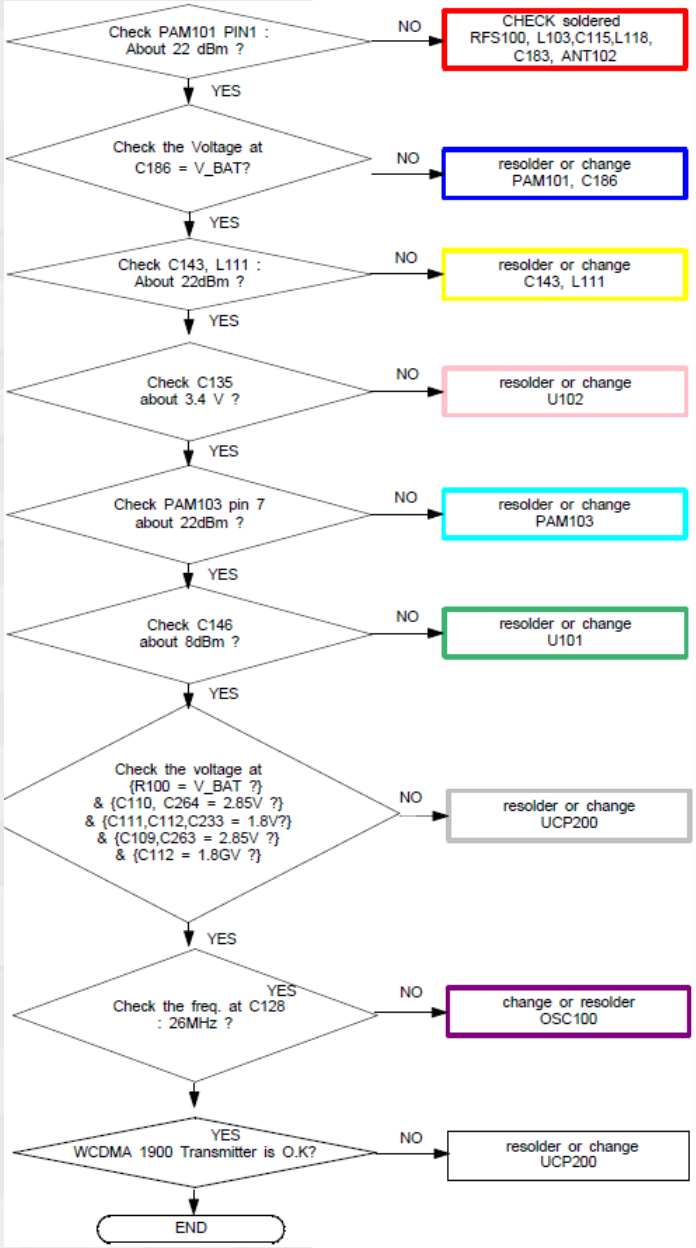

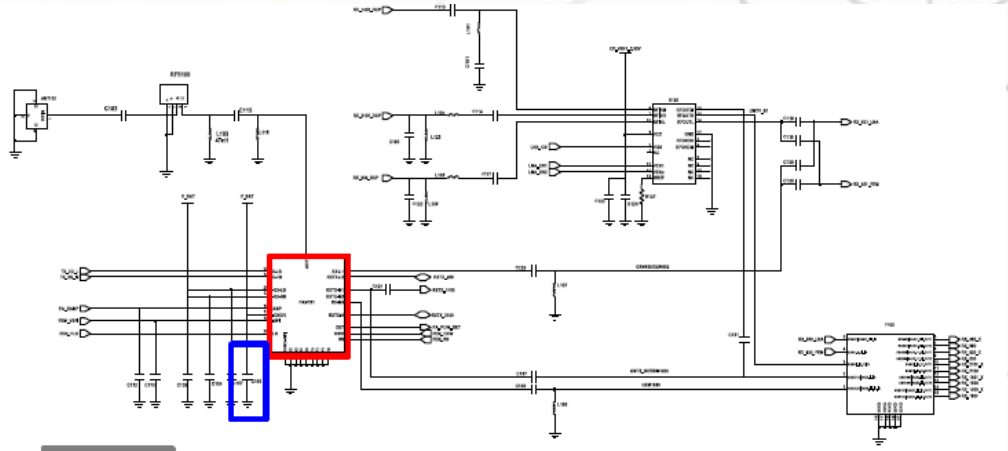

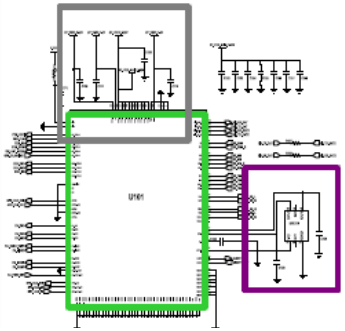

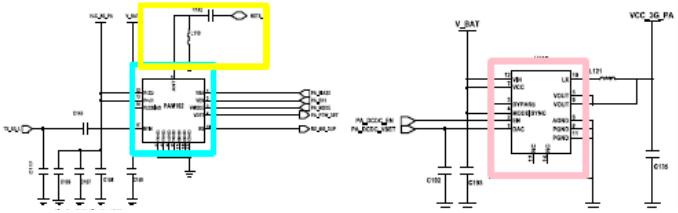

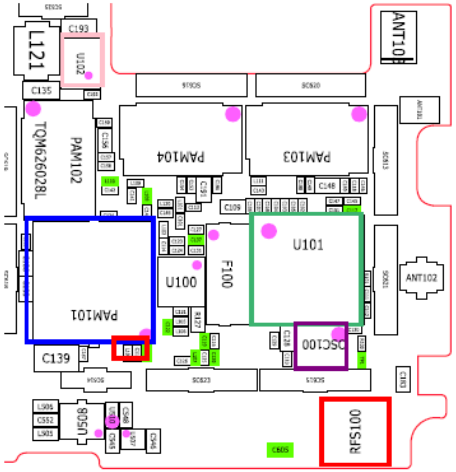

WCDMA Band3 TX

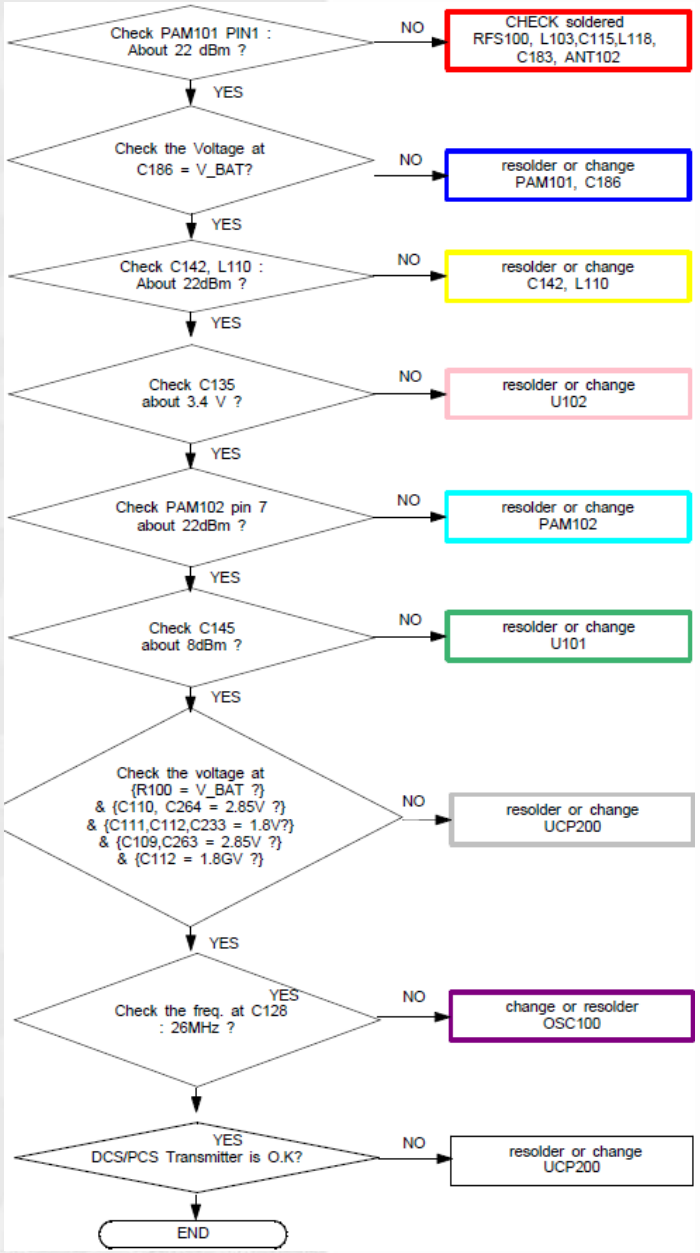

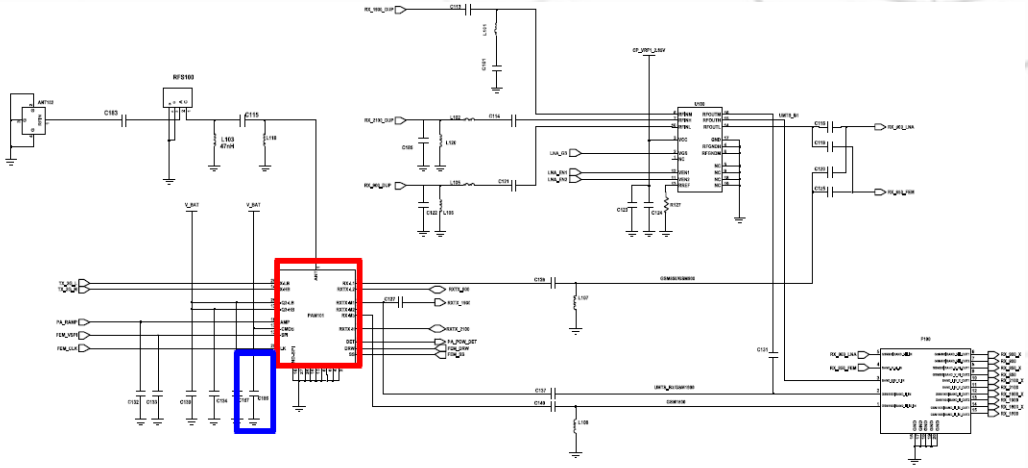

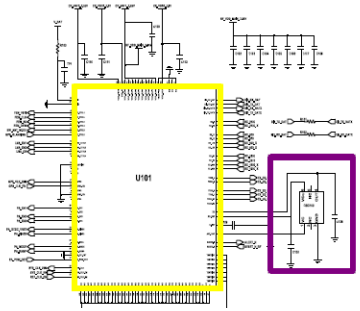

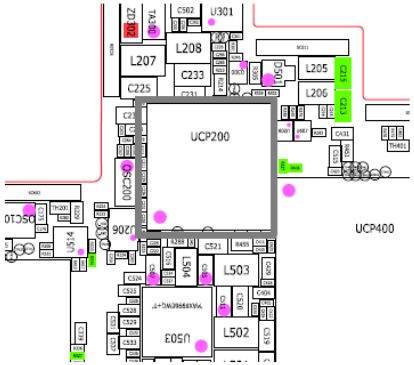

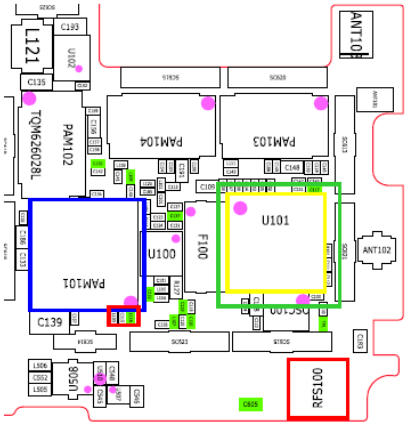

Contents

Calibration

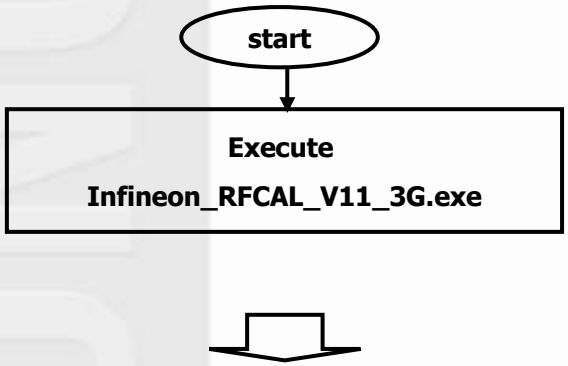

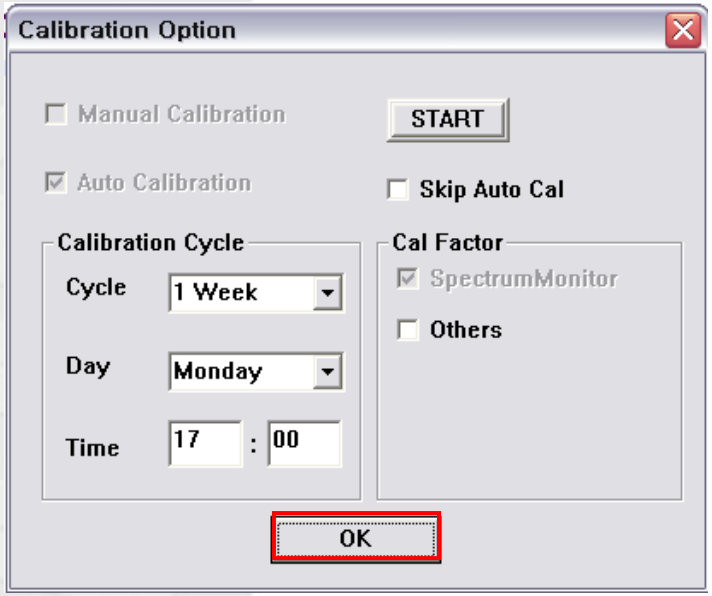

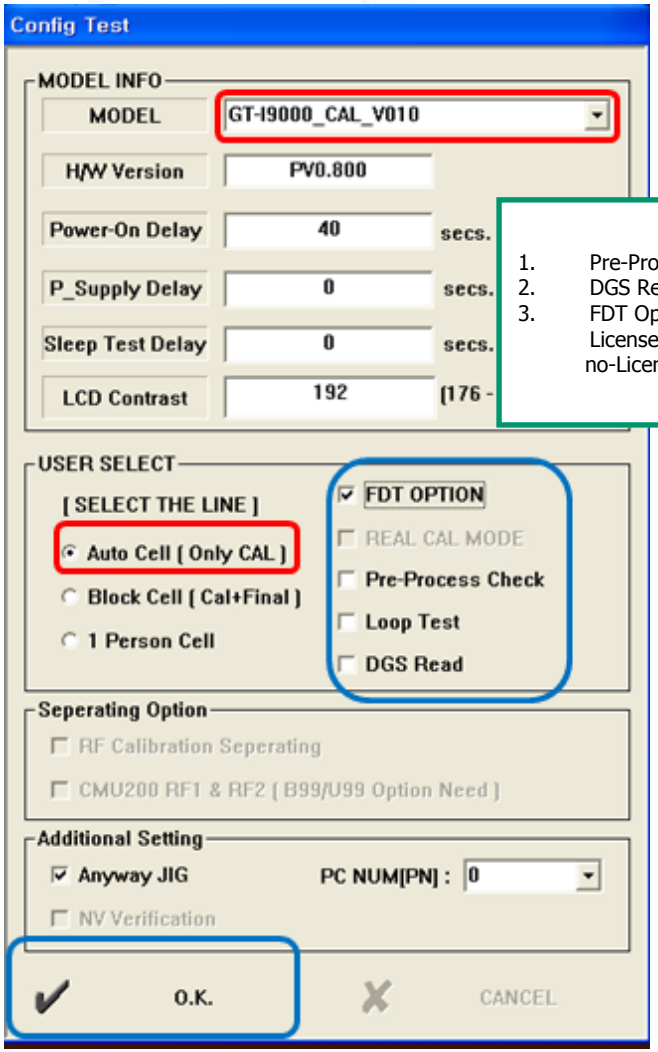

1. Pre-Process : un-check
2. DGS Read : un-check
3. FDT Option : if you have License : check , no-License : un-check

Calibration

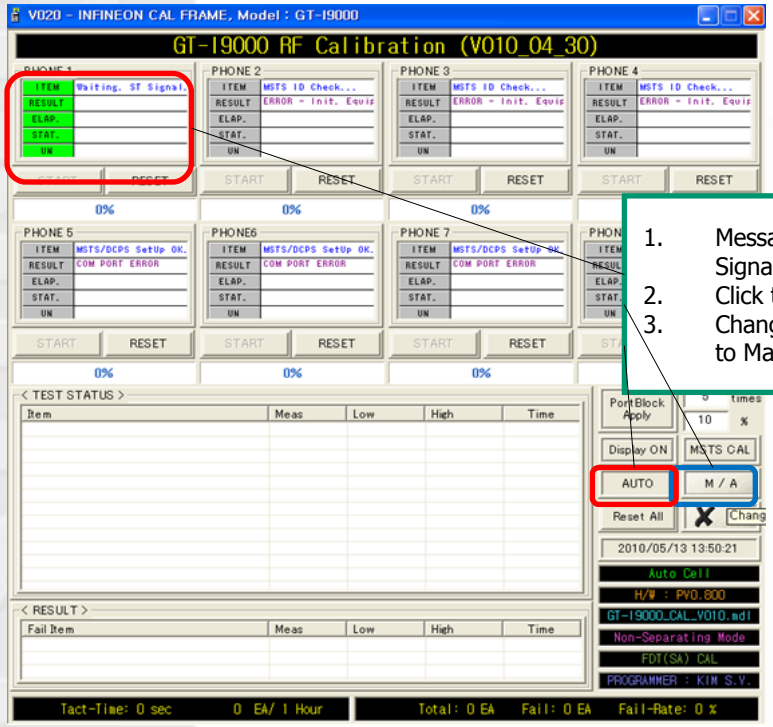

1. Message "Wating. ST Signal"
2. Click the M/A button
3. Change Automatic mode to Manual mode

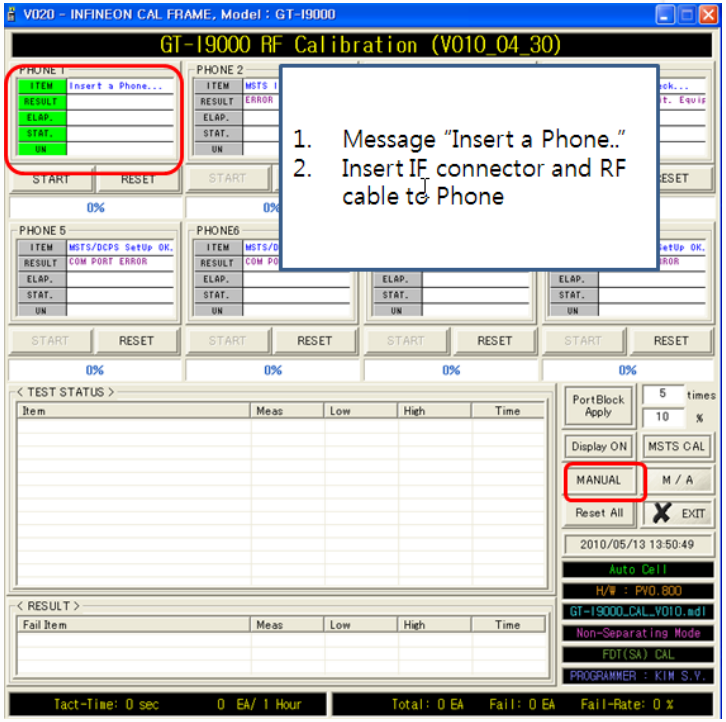

1. Message "Insert a Phone.."
2. Insert IF connector and RF cable to Phone

- THE END -