GSM TELEPHONE

GT-i7500

SERVICE Manual

GSM TELEPHONE

CONTENTS

1. Safety Precautions

1-1. Repair Precaution

- Repair in Shield Box, during detailed tuning.
  Take specially care of tuning or test,
  because specipicty of cellular phone is sensitive for surrounding interference(RF noise).

- Be careful to use a kind of magnetic object or tool,
  because performance of parts is damaged by the influence of manetic force.

- Surely use a standard screwdriver when you disassemble this product,
  otherwise screw will be worn away.

- Use a thicken twisted wire when you measure level.
  A thicken twisted wire has low resistance, therefore error of measurement is few.

- Repair after separate Test Pack and Set because for short danger (for example an overcurrent and furious flames of parts etc) when you repair board in condition of connecting Test Pack and tuning on.

- Take specially care of soldering, because Land of PCB is small and weak in heat.

- Surely tune on/off while using AC power plug, because a repair of battery charger is dangerous when tuning ON/OFF PBA and Connector after disassembing charger.

- Don't use as you pleases after change other material than replacement registered on SEC System.
  Otherwise engineer in charge isn't charged with problem that you don't keep this rules.

1-2. ESD(Electrostatically Sensitive Devices) Precaution

Several semiconductor may be damaged easilly by static electricity. Such parts are called by ESD(Electrostatically Sensitive Devices), for example IC,BGA chip etc. Read Precaution below. You can prevent from ESD damage by static electricity.

- Remove static electricity remained your body before you touch semiconductor or parts with semiconductor. There are ways that you touch an earthed place or wear static electricity prevention string on wrist.

- Use earthed soldering steel when you connect or disconnect ESD.

- Use soldering removing tool to break static electricity. , otherwise ESD will be damaged by static electricity.

- Don't unpack until you set up ESD on product. Because most of ESD are packed by box and aluminum plate to have conductive power,they are prevented from static electricity.

- You must maintain electric contact between ESD and place due to be set up until ESD is connected completely to the proper place or a circuit board.

2. Specification

2-1. GSM General Specification

	EGSM 850 Phase 2	EGSM 900 Phase 2	DCS1800	PCS1900	WCDMA
Freq. Band[MHz] Uplink/Downlink	824~849 869~894	880~915 925~960	1710~1785 1805~1880	1850~1910 1930~1990	1920~1980 2110~2170
ARFCN range	128~251	0~124 & 975~1023	512~885	512~810	10562~10838
Tx/Rx spacing	45 MHz	45 MHz	95 MHz	80MHz	190MHz
Mod. Bit rate/ Bit Period	270.833 Kbps 3.692 us	270.833 Kbps 3.692 us	270.833 Kbps 3.692 us	270.833 Kbps 3.692 us	3.84Mcps/s
Time Slot Period/ Frame Period	576.9 us 4.615 ms	576.9 us 4.615 ms	576.9 us 4.615 ms	576.9 us 4.615 ms	10ms
Modulation	0.3 GMSK	0.3 GMSK	0.3 GMSK	0.3 GMSK	Up Link:2BPSK Down Link:QPSK
MS Power	33 dBm~5 dBm	33 dBm~5 dBm	30 dBm~0 dBm	30 dBm~0 dBm	MAX:24(+1.-3) dBm MIN:<-50dBm
Power Class	5 pcl ~ 19 pcl	5 pcl ~ 19 pcl	0 pcl ~ 15 pcl	0 pcl ~ 15 pcl	CLASS 3
Sensitivity	-102 dBm	-102 dBm	-100 dBm	-100 dBm	-106.7 dBm
TDMA Mux	8	8	8	8	-
Cell Radius	-	35 Km	2 Km	-	-

2-2. GSM TX power class

TX Power control level	EGSM850
5	33±2 dBm
6	31±2 dBm
7	29±2 dBm
8	27±2 dBm
9	25±2 dBm
10	23±2 dBm
11	21±2 dBm
12	19±2 dBm
13	17±2 dBm
14	15±2 dBm
15	13±2 dBm
16	11±3 dBm
17	9±3 dBm
18	7±3 dBm
19	5±3 dBm

TX Power control level	EGSM900
5	33±2 dBm
6	31±2 dBm
7	29±2 dBm
8	27±2 dBm
9	25±2 dBm
10	23±2 dBm
11	21±2 dBm
12	19±2 dBm
13	17±2 dBm
14	15±2 dBm
15	13±2 dBm
16	11±3 dBm
17	9±3 dBm
18	7±3 dBm
19	5±3 dBm

TX Power control level	DCS1800
0	30±3 dBm
1	28±3 dBm
2	26±3 dBm
3	24±3 dBm
4	22±3 dBm
5	20±3 dBm
6	18±3 dBm
7	16±3 dBm
8	14±3 dBm
9	12±4 dBm
10	10±4 dBm
11	8±4 dBm
12	6±4 dBm
13	4±4 dBm
14	2±5 dBm
15	0±5 dBm

TX Power control level	PCS1900
0	30±3 dBm
1	28±3 dBm
2	26±3 dBm
3	24±3 dBm
4	22±3 dBm
5	20±3 dBm
6	18±3 dBm
7	16±3 dBm
8	14±3 dBm
9	12±4 dBm
10	10±4 dBm
11	8±4 dBm
12	6±4 dBm
13	4±4 dBm
14	2±5 dBm
15	0±5 dBm

3. Operation Instruction and Installation

Main Function

- Simple Bar Design
- 3.2”, 480x320 HVGA 16M Color
- 5MP + AF
- Full Touch
- GPS/BT v2.0/USB v2.0
- Android OS
- Full Google Serivce(Google Mail,Google Map, YouTube Service)
- Full browsing Google Chrome-Litc Browser
- S/W Download via Android Market

4. Array course control

4-1. Software Adjustments

Test Jig (GH99-36900A)

Test Cable (GH39-01160A)

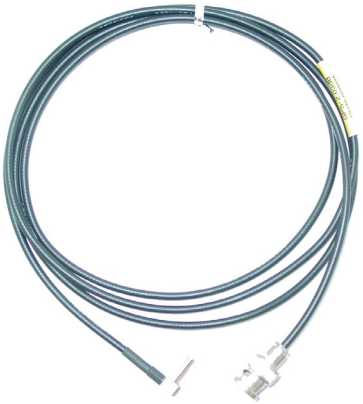

RF Test Cable (GH39-00985A)

Adapter (GH99-38251A)

4-2. Software Downloading

4-2-1. Downloading Binary Files

• 2 binary files for downloading I7500

I7500XXIXX-BOOTLOADER.tar : Bootloader

I7500XXIXX-PDA.tar : PDA File

I7500XXIXX-PHONE.tar : PHONE File

I7500XXIXX-CSC.tar : CSC File

ORION.ops : OPS File

4-2-2. Pre-requsite for Downloading

- Downloader Program (MultiOdin3.87.exe)
- GT-I7500 Mobile Phone
- JIG BOX
- Test Cable
- Serial Cable
- Binary files

4-2-3. S/W Downloader Program

1. Load the binary download program by executing the "MultiOdin Downloader v3.87"

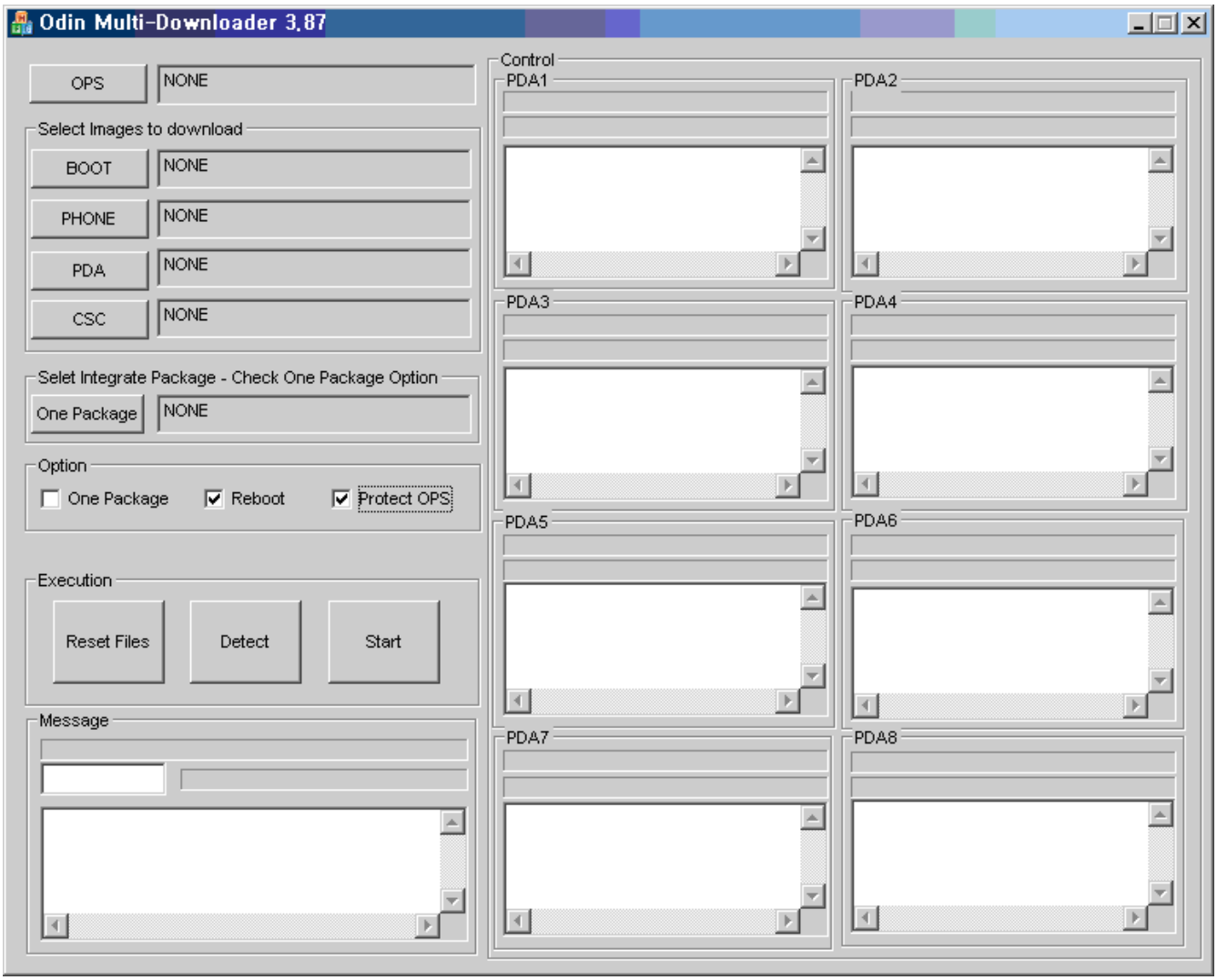

2. Select Option

- Check Reboot and Project OPS

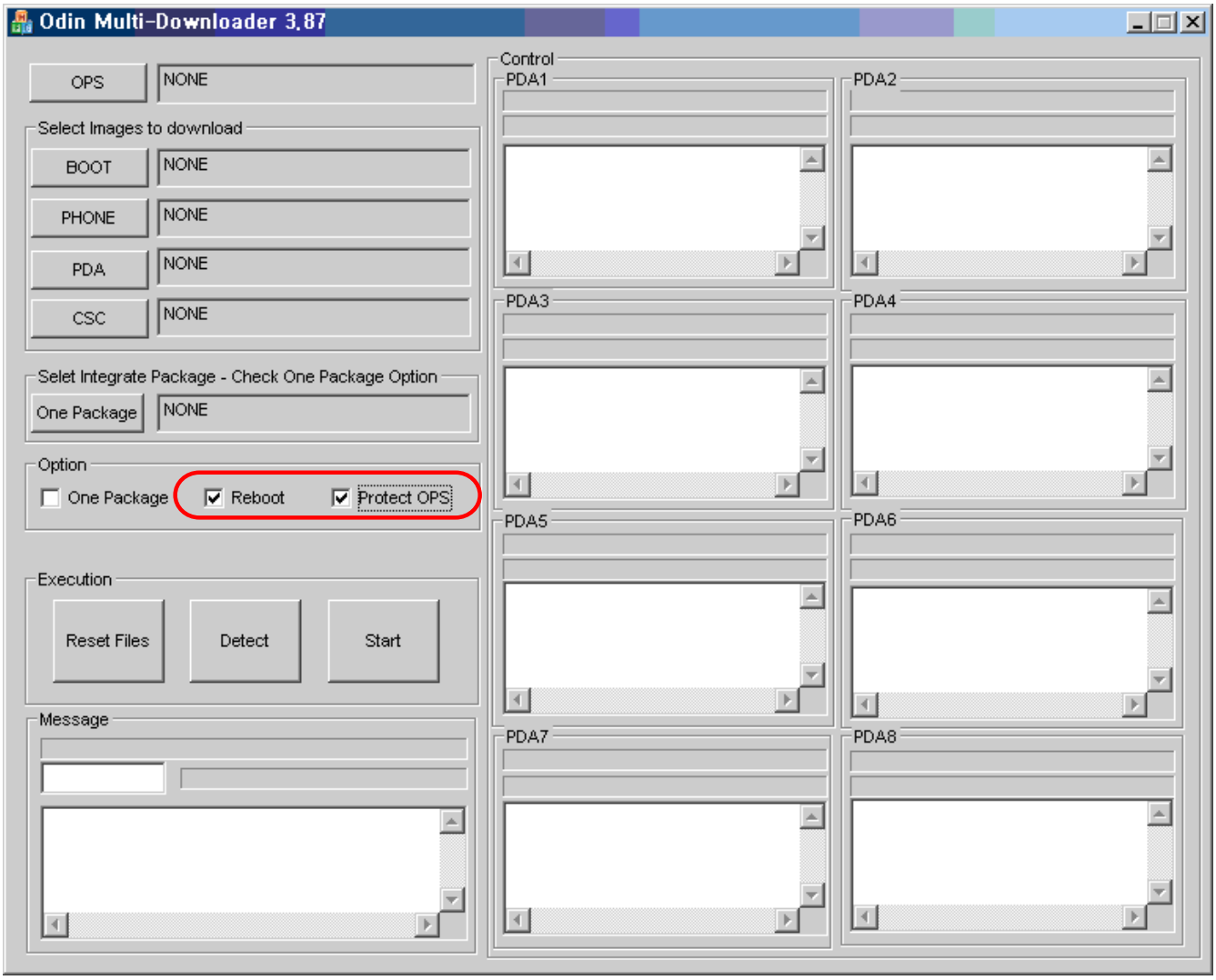

3. Select file(s) what you want to download

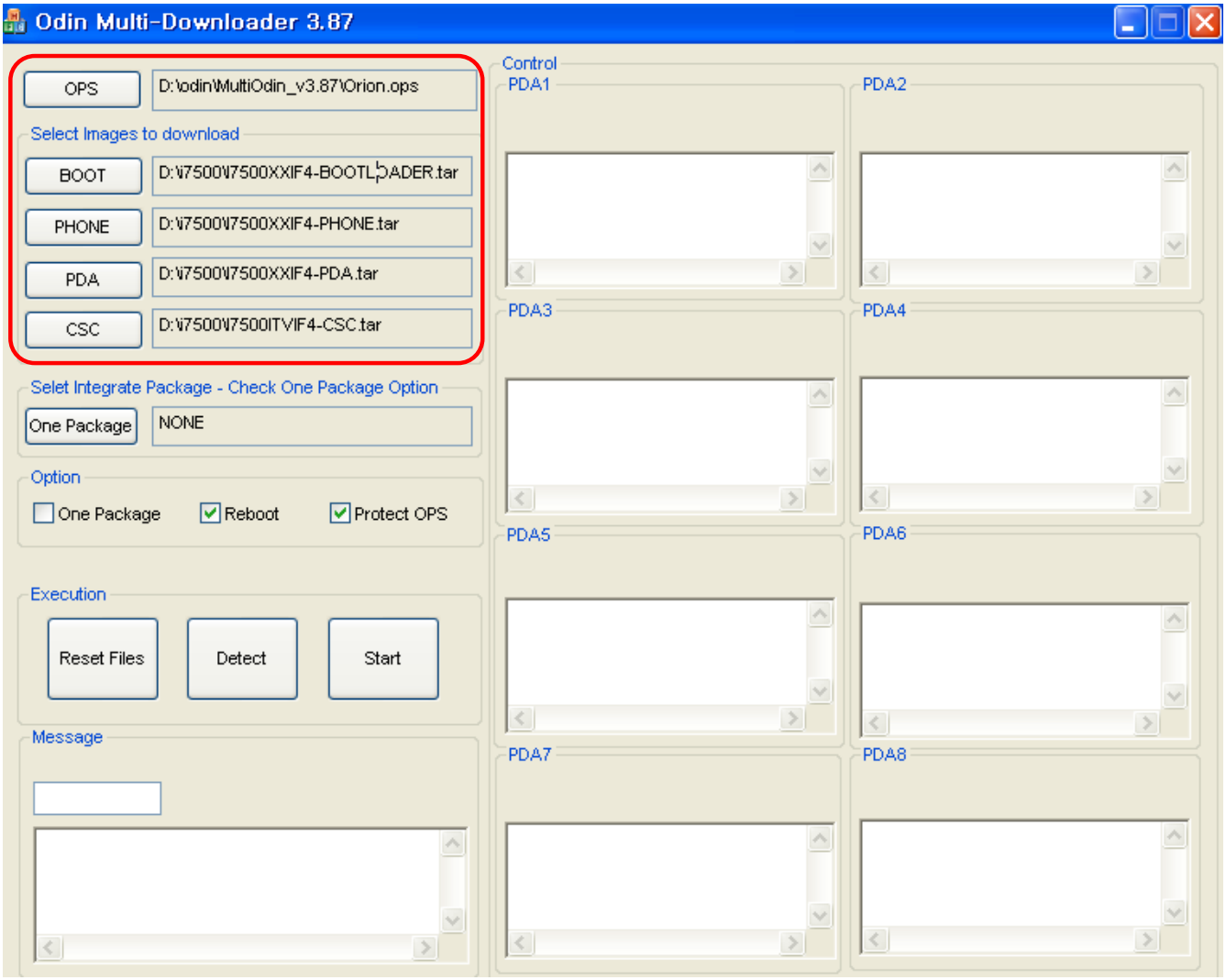

- Click OPS Button and specify "Orion.ops" file.
- Click BOOT Button and specify file such as "i7500XXIXX_BOOT.tar" file.
- Click Phone Button and specify file such as "i7500XXIXX_PHONE.tar" file.
- Click PDA Button and specify file such as "i7500XXIXX_PDA.tar" file.
- Click CSC Button and specify file such as "i7500XXIXX_CSC.tar" file.

4. Connect the USB cable, and press "Detect" button.
 - After detecting the phone, "finished detecting COM ports" message is shown.

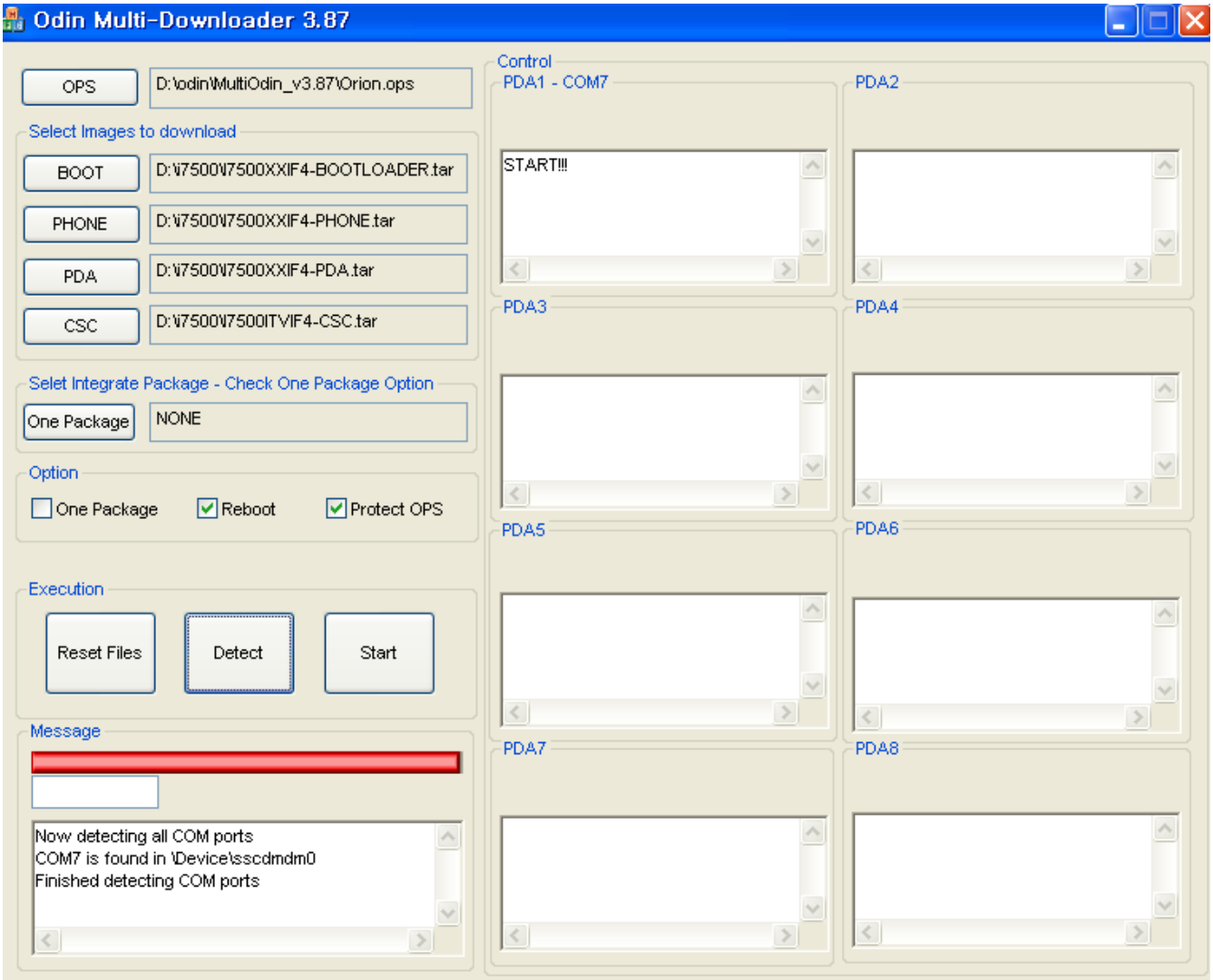

5. Press the "Start" button.

6. When downloading is complete, the phone will automatically reboot.

7. Confirm the downloaded version name and etc. :
 ***#1234#**
 Full Reset :
 Setting - SD card & phone storage - Factory data reset - Reset phone - Erase everything

5. Exploded View and Parts List

5-1. Cellular phone Exploded View

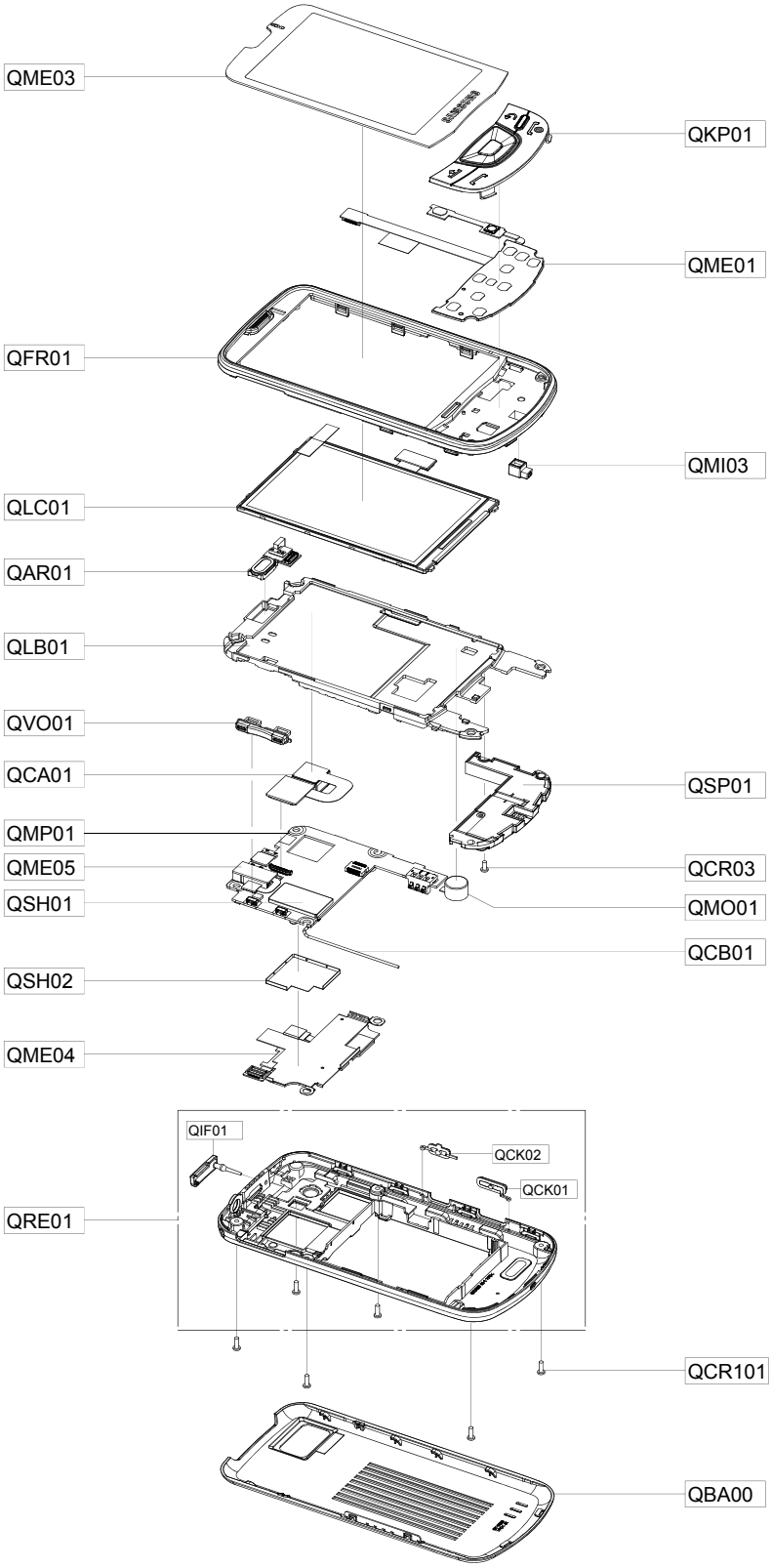

5-2. Cellular phone Parts list

Design LOC		Description	SEC CODE
QAR01		ASSY ETC-SENSOR/MIC/RCV FPCB ASSY(GT-I75	GH59-07477A
QBA00		ASSY COVER-BATT	GH98-13723A
QCA01		CAMERA MODULE-GT_I7500_5M_AF	GH59-07566A
QCB01		COAXIAL CABLE-GT-I7500	GH39-01358A
QCR03		SCREW-MACHINE	6001-001811
QCR101		SCREW-MACHINE	6001-002005
QFR01		ASSY CASE-FRONT	GH98-12963A
QKP01		ASSY KEYPAD-MAIN	GH98-12965A
QLB01		ASSY BRACKET-LCD	GH98-13971A
QLC01		ASSY LCD-3.2" HVGA GT-I7500 AMOLED ASSY	GH96-03841A
QME01		KEY FPCB-GT-I7500 KEY PAD FPCB ASSY	GH59-07466A
QME03		TOUCH/PANEL-GT-I7500 MODULE	GH59-07467A
QME04		MODULE-SIM SOCKET FPCB ASS'Y	GH59-07465A
QME05		ASSY ETC-EARJACK FPCB ASSY(GT-I7500)	GH59-07476A
QMI03		RMO RUBBER-MIC	GH73-13117A
QMO01		MOTOR LINEAR VIBRATION-SGHV901 MOTOR	GH31-00476A
QMP01		A/S ASSY-GTI7500,PBA MAIN (SVC)	GH82-03871A
QSH01		ICT SHIELD-CAN PCB FRONT	GH70-05103A
QSH02		ICT SHIELD-CAN PCB REAR	GH70-05104A
QSP01		MODULE-SPEAKER MODULE	GH59-07688A
QVO01		ASSY KEY-VOLUME	GH98-12966A
QRE01		ASSY CASE-REAR	GH98-12964A
	QIF01	PMO COVER-IF	GH72-53683A
	QCK02	PMO KEY-HOLD	GH72-54013A
	QCK01	ASSY KEY-CAM	GH98-12967A

6. MAIN Electrical Parts List

SEC CODE	Design LOC	Description
0403-001749	DIODE-ZENER	D401
0406-001223	DIODE-TVS	ZD503
0406-001231	DIODE-TVS	D800
0406-001254	DIODE-TVS	ZD504
0406-001254	DIODE-TVS	ZD505
0406-001254	DIODE-TVS	ZD700
0406-001254	DIODE-TVS	ZD701
0406-001267	DIODE-TVS	ZD500
0406-001267	DIODE-TVS	ZD501
0406-001329	DIODE-TVS	D600
0406-001329	DIODE-TVS	ZD600
0406-001329	DIODE-TVS	ZD601
0407-001002	DIODE-ARRAY	D400
0504-001113	TR-DIGITAL	TR400
0801-002237	IC-CMOSLOGIC	U600
0801-003013	IC-CMOSLOGIC	U300
1001-001336	IC-ANALOGSWITCH	U500
1001-001336	IC-ANALOGSWITCH	U804
1001-001580	IC-ANALOGMULTIPLEX	U602
1003-002047	IC-MOTORDRIVER	U802
1108-000277	IC-MCP	UME300
1201-002581	IC-RFAMP	F101
1201-002614	IC-POWERAMP	PAM201
1201-002830	IC-POWERAMP	PAM100
1201-002864	IC-AUDIOAMP	U501
1201-002889	IC-POWERAMP	PAM202
1201-002890	IC-POWERAMP	PAM200
1202-001079	IC-VOLTAGECOMP.	U502
1202-001079	IC-VOLTAGECOMP.	U503
1203-004683	IC-POSI.FIXEDREG.	U701
1203-005092	IC-POWERSUPERVISOR	U400

SEC CODE	Design LOC	Description
1203-005503	IC-DC/DCCONVERTER	U700
1203-005689	IC-BATTERY	U401
1203-005690	IC-DC/DCCONVERTER	U702
1205-003297	IC-TRANSCEIVER	U200
1205-003527	IC-LCDCONTROLLER	U703
1205-003649	IC-MODEM	UCP300
1205-003720	IC-INTERFACE	U805
1209-001766	IC-SENSOR	U803
1209-001872	IC-SENSOR	U800
1404-001224	THERMISTOR-NTC	V300
1405-001177	VARISTOR	V800
1405-001177	VARISTOR	V801
1405-001177	VARISTOR	V802
1405-001177	VARISTOR	V803
1405-001177	VARISTOR	V804
1405-001177	VARISTOR	V805
1405-001177	VARISTOR	V806
1405-001177	VARISTOR	V807
2007-001156	R-CHIP	R415
2007-001298	R-CHIP	R514
2007-001298	R-CHIP	R515
2007-007137	R-CHIP	R502
2007-007875	R-CHIP	R702
2007-007741	R-CHIP	C727
2007-007741	R-CHIP	R101
2007-007741	R-CHIP	R328
2007-007741	R-CHIP	R334
2007-007741	R-CHIP	R346
2007-007741	R-CHIP	R347
2007-007741	R-CHIP	R407
2007-007741	R-CHIP	R606

SEC CODE	Design LOC	Description
2007-007741	R-CHIP	R705
2007-007741	R-CHIP	R801
2007-007741	R-CHIP	R804
2007-007741	R-CHIP	R806
2007-008045	R-CHIP	R200
2007-008045	R-CHIP	R330
2007-008045	R-CHIP	R418
2007-008045	R-CHIP	R501
2007-008045	R-CHIP	R600
2007-008045	R-CHIP	R807
2007-008046	R-CHIP	R110
2007-008046	R-CHIP	R111
2007-008047	R-CHIP	R108
2007-008047	R-CHIP	R109
2007-008049	R-CHIP	R333
2007-008052	R-CHIP	R305
2007-008052	R-CHIP	R331
2007-008055	R-CHIP	R402
2007-008055	R-CHIP	R703
2007-008055	R-CHIP	R704
2007-008055	R-CHIP	R709
2007-008263	R-CHIP	R414
2007-008420	R-CHIP	R602
2007-008456	R-CHIP	R605
2007-008483	R-CHIP	R329
2007-008516	R-CHIP	R316
2007-008516	R-CHIP	R348
2007-008588	R-CHIP	R105
2007-008588	R-CHIP	R314
2007-008588	R-CHIP	R315
2007-008588	R-CHIP	R319

SEC CODE	Design LOC	Description
2007-008588	R-CHIP	R320
2007-008590	R-CHIP	R322
2007-008780	R-CHIP	R714
2007-008800	R-CHIP	R336
2007-008806	R-CHIP	R106
2007-008809	R-CHIP	R405
2007-009084	R-CHIP	R301
2007-009084	R-CHIP	R507
2007-009084	R-CHIP	R509
2007-009084	R-CHIP	R513
2007-009155	R-CHIP	R508
2007-009157	R-CHIP	R337
2007-009157	R-CHIP	R410
2007-009157	R-CHIP	R411
2007-009157	R-CHIP	R603
2007-009157	R-CHIP	R604
2007-009168	R-CHIP	R342
2007-009171	R-CHIP	R310
2007-009171	R-CHIP	R311
2007-009171	R-CHIP	R312
2007-009171	R-CHIP	R313
2007-009171	R-CHIP	R323
2007-009171	R-CHIP	R324
2007-009171	R-CHIP	R325
2007-009171	R-CHIP	R326
2007-009182	R-CHIP	R805
2007-009199	R-CHIP	R201
2007-009199	R-CHIP	R202
2007-009199	R-CHIP	R204
2007-009199	R-CHIP	R207
2007-009201	R-CHIP	R107

SEC CODE	Design LOC	Description
2007-009212	R-CHIP	R208
2007-009212	R-CHIP	R503
2007-009212	R-CHIP	R511
2007-009233	R-CHIP	R510
2007-009233	R-CHIP	R512
2007-009354	R-CHIP	R318
2007-009402	R-CHIP	R344
2007-009402	R-CHIP	R345
2007-009408	R-CHIP	R303
2007-009408	R-CHIP	R304
2007-009408	R-CHIP	R308
2007-009408	R-CHIP	R309
2007-009408	R-CHIP	R504
2007-009408	R-CHIP	R506
2007-009410	R-CHIP	R413
2007-009420	R-CHIP	R205
2007-009766	R-CHIP	R209
2007-009766	R-CHIP	R210
2007-009801	R-CHIP	R707
2007-009801	R-CHIP	R708
2007-009805	R-CHIP	R203
2007-009805	R-CHIP	R403
2007-009838	R-CHIP	R404
2007-009866	R-CHIP	R408
2007-009969	R-CHIP	R321
2203-000233	C-CERCHIP	C109
2203-000233	C-CERCHIP	C140
2203-000233	C-CERCHIP	C340
2203-000233	C-CERCHIP	C601
2203-000254	C-CERCHIP	C217
2203-000386	C-CERCHIP	C503

SEC CODE	Design LOC	Description
2203-000386	C-CERCHIP	C521
2203-000386	C-CERCHIP	C533
2203-000386	C-CERCHIP	C534
2203-000425	C-CERCHIP	C441
2203-000425	C-CERCHIP	C442
2203-000438	C-CERCHIP	C201
2203-000438	C-CERCHIP	C250
2203-000438	C-CERCHIP	C418
2203-000438	C-CERCHIP	C435
2203-000438	C-CERCHIP	C437
2203-000438	C-CERCHIP	C438
2203-000438	C-CERCHIP	C518
2203-000438	C-CERCHIP	C519
2203-000438	C-CERCHIP	C726
2203-000466	C-CERCHIP	L119
2203-000489	C-CERCHIP	C343
2203-000627	C-CERCHIP	C108
2203-000696	C-CERCHIP	C128
2203-000725	C-CERCHIP	C807
2203-000812	C-CERCHIP	C107
2203-000812	C-CERCHIP	C449
2203-000854	C-CERCHIP	C702
2203-000870	C-CERCHIP	C220
2203-000870	C-CERCHIP	C252
2203-001153	C-CERCHIP	C500
2203-001153	C-CERCHIP	C522
2203-001153	C-CERCHIP	C531
2203-001153	C-CERCHIP	C532
2203-001383	C-CERCHIP	C138
2203-001383	C-CERCHIP	L204
2203-002443	C-CERCHIP	C200

SEC CODE	Design LOC	Description
2203-002443	C-CERCHIP	C246
2203-002668	C-CERCHIP	L222
2203-002709	C-CERCHIP	C600
2203-002709	C-CERCHIP	C710
2203-005050	C-CERCHIP	L213
2203-005057	C-CERCHIP	C253
2203-005234	C-CERCHIP	L207
2203-005234	C-CERCHIP	L219
2203-005446	C-CERCHIP	C133
2203-005482	C-CERCHIP	C341
2203-005482	C-CERCHIP	C342
2203-005482	C-CERCHIP	C525
2203-005482	C-CERCHIP	C530
2203-005482	C-CERCHIP	C800
2203-005482	C-CERCHIP	C801
2203-005482	C-CERCHIP	C802
2203-005482	C-CERCHIP	C803
2203-005482	C-CERCHIP	C804
2203-005482	C-CERCHIP	C806
2203-005682	C-CERCHIP	C100
2203-005682	C-CERCHIP	C105
2203-005682	C-CERCHIP	C114
2203-005682	C-CERCHIP	C115
2203-005682	C-CERCHIP	C116
2203-005682	C-CERCHIP	C117
2203-005682	C-CERCHIP	C136
2203-005682	C-CERCHIP	C137
2203-005682	C-CERCHIP	C205
2203-005682	C-CERCHIP	C210
2203-005682	C-CERCHIP	C245
2203-005682	C-CERCHIP	C274

SEC CODE	Design LOC	Description
2203-005682	C-CERCHIP	C346
2203-005682	C-CERCHIP	C609
2203-005682	C-CERCHIP	C808
2203-005682	C-CERCHIP	C809
2203-005682	C-CERCHIP	C810
2203-005682	C-CERCHIP	C811
2203-005682	C-CERCHIP	R206
2203-005719	C-CERCHIP	C134
2203-005725	C-CERCHIP	C233
2203-005725	C-CERCHIP	C234
2203-005725	C-CERCHIP	C236
2203-005725	C-CERCHIP	C237
2203-005725	C-CERCHIP	C239
2203-005725	C-CERCHIP	C243
2203-005725	C-CERCHIP	C248
2203-005725	C-CERCHIP	C251
2203-005725	C-CERCHIP	C257
2203-005725	C-CERCHIP	C261
2203-005725	C-CERCHIP	C262
2203-005725	C-CERCHIP	C266
2203-005725	C-CERCHIP	C269
2203-005725	C-CERCHIP	C278
2203-005725	C-CERCHIP	C281
2203-005725	C-CERCHIP	C283
2203-005725	C-CERCHIP	C286
2203-005729	C-CERCHIP	C131
2203-005729	C-CERCHIP	C203
2203-005732	C-CERCHIP	C226
2203-005732	C-CERCHIP	C227
2203-005736	C-CERCHIP	C141
2203-005736	C-CERCHIP	C213

SEC CODE	Design LOC	Description
2203-005736	C-CERCHIP	C214
2203-005736	C-CERCHIP	C215
2203-005736	C-CERCHIP	C229
2203-005736	C-CERCHIP	C231
2203-005736	C-CERCHIP	C235
2203-005736	C-CERCHIP	C238
2203-005736	C-CERCHIP	C241
2203-005736	C-CERCHIP	C244
2203-005736	C-CERCHIP	C247
2203-005736	C-CERCHIP	C259
2203-005736	C-CERCHIP	C263
2203-005736	C-CERCHIP	C267
2203-005736	C-CERCHIP	C271
2203-005736	C-CERCHIP	C272
2203-005736	C-CERCHIP	C273
2203-005736	C-CERCHIP	C279
2203-005740	C-CERCHIP	C219
2203-005740	C-CERCHIP	C224
2203-005789	C-CERCHIP	L208
2203-005792	C-CERCHIP	C270
2203-005792	C-CERCHIP	C276
2203-005806	C-CERCHIP	C204
2203-005806	C-CERCHIP	C211
2203-005806	C-CERCHIP	C265
2203-005806	C-CERCHIP	C335
2203-005806	C-CERCHIP	C350
2203-005806	C-CERCHIP	C400
2203-005806	C-CERCHIP	C411
2203-005806	C-CERCHIP	C412
2203-005806	C-CERCHIP	C415
2203-005968	C-CERCHIP	C602

SEC CODE	Design LOC	Description
2203-006053	C-CERCHIP	C805
2203-006137	C-CERCHIP	C514
2203-006137	C-CERCHIP	C515
2203-006194	C-CERCHIP	C208
2203-006194	C-CERCHIP	C333
2203-006194	C-CERCHIP	C443
2203-006194	C-CERCHIP	C446
2203-006194	C-CERCHIP	C451
2203-006208	C-CERCHIP	C416
2203-006208	C-CERCHIP	C425
2203-006208	C-CERCHIP	C427
2203-006257	C-CERCHIP	C512
2203-006257	C-CERCHIP	C513
2203-006305	C-CERCHIP	C104
2203-006305	C-CERCHIP	C132
2203-006324	C-CERCHIP	C218
2203-006324	C-CERCHIP	C401
2203-006324	C-CERCHIP	C402
2203-006324	C-CERCHIP	C405
2203-006324	C-CERCHIP	C406
2203-006324	C-CERCHIP	C408
2203-006324	C-CERCHIP	C409
2203-006324	C-CERCHIP	C705
2203-006324	C-CERCHIP	C711
2203-006348	C-CERCHIP	C450
2203-006399	C-CERCHIP	C709
2203-006399	C-CERCHIP	C713
2203-006399	C-CERCHIP	C721
2203-006399	C-CERCHIP	C723
2203-006423	C-CERCHIP	C103
2203-006423	C-CERCHIP	C126

SEC CODE	Design LOC	Description
2203-006423	C-CERCHIP	C206
2203-006423	C-CERCHIP	C228
2203-006423	C-CERCHIP	C230
2203-006423	C-CERCHIP	C232
2203-006423	C-CERCHIP	C240
2203-006423	C-CERCHIP	C242
2203-006423	C-CERCHIP	C249
2203-006423	C-CERCHIP	C256
2203-006423	C-CERCHIP	C258
2203-006423	C-CERCHIP	C264
2203-006423	C-CERCHIP	C268
2203-006423	C-CERCHIP	C277
2203-006423	C-CERCHIP	C280
2203-006423	C-CERCHIP	C284
2203-006423	C-CERCHIP	C285
2203-006423	C-CERCHIP	C302
2203-006423	C-CERCHIP	C304
2203-006423	C-CERCHIP	C306
2203-006423	C-CERCHIP	C309
2203-006423	C-CERCHIP	C311
2203-006423	C-CERCHIP	C313
2203-006423	C-CERCHIP	C317
2203-006423	C-CERCHIP	C322
2203-006423	C-CERCHIP	C327
2203-006423	C-CERCHIP	C332
2203-006423	C-CERCHIP	C344
2203-006423	C-CERCHIP	C345
2203-006423	C-CERCHIP	C349
2203-006423	C-CERCHIP	C407
2203-006423	C-CERCHIP	C410
2203-006423	C-CERCHIP	C414

SEC CODE	Design LOC	Description
2203-006423	C-CERCHIP	C440
2203-006423	C-CERCHIP	C507
2203-006423	C-CERCHIP	C511
2203-006423	C-CERCHIP	C611
2203-006423	C-CERCHIP	C704
2203-006423	C-CERCHIP	C714
2203-006423	C-CERCHIP	C722
2203-006423	C-CERCHIP	C724
2203-006439	C-CERCHIP	C112
2203-006439	C-CERCHIP	C113
2203-006462	C-CERCHIP	C347
2203-006562	C-CERCHIP	C321
2203-006562	C-CERCHIP	C323
2203-006562	C-CERCHIP	C324
2203-006562	C-CERCHIP	C325
2203-006562	C-CERCHIP	C326
2203-006562	C-CERCHIP	C331
2203-006562	C-CERCHIP	C334
2203-006562	C-CERCHIP	C339
2203-006562	C-CERCHIP	C603
2203-006562	C-CERCHIP	C605
2203-006681	C-CERCHIP	C337
2203-006824	C-CERCHIP	C403
2203-006824	C-CERCHIP	C404
2203-006838	C-CERCHIP	C413
2203-006838	C-CERCHIP	C419
2203-006838	C-CERCHIP	C420
2203-006838	C-CERCHIP	C421
2203-006838	C-CERCHIP	C422
2203-006838	C-CERCHIP	C423
2203-006838	C-CERCHIP	C424

SEC CODE	Design LOC	Description
2203-006838	C-CERCHIP	C426
2203-006838	C-CERCHIP	C429
2203-006838	C-CERCHIP	C430
2203-006838	C-CERCHIP	C431
2203-006838	C-CERCHIP	C606
2203-006838	C-CERCHIP	C610
2203-006839	C-CERCHIP	C504
2203-006841	C-CERCHIP	C432
2203-006841	C-CERCHIP	C433
2203-006841	C-CERCHIP	C445
2203-006841	C-CERCHIP	C604
2203-006846	C-CERCHIP	C207
2203-006846	C-CERCHIP	C212
2203-006872	C-CERCHIP	C120
2203-006872	C-CERCHIP	C330
2203-006872	C-CERCHIP	C336
2203-006872	C-CERCHIP	C338
2203-006872	C-CERCHIP	C510
2203-006872	C-CERCHIP	C706
2203-006872	C-CERCHIP	C707
2203-006872	C-CERCHIP	C708
2203-006872	C-CERCHIP	C715
2203-006872	C-CERCHIP	C716
2203-006890	C-CERCHIP	C307
2203-006890	C-CERCHIP	C318
2203-006890	C-CERCHIP	C319
2203-006890	C-CERCHIP	C320
2203-006890	C-CERCHIP	C417
2203-006890	C-CERCHIP	C434
2203-006890	C-CERCHIP	C436
2203-006890	C-CERCHIP	C439

SEC CODE	Design LOC	Description
2203-006890	C-CERCHIP	C505
2203-006890	C-CERCHIP	C506
2203-006963	C-CERCHIP	C718
2203-006963	C-CERCHIP	C719
2203-006963	C-CERCHIP	C720
2203-006979	C-CERCHIP	C202
2203-006979	C-CERCHIP	C260
2203-006979	C-CERCHIP	C282
2203-006979	C-CERCHIP	C725
2203-007271	C-CERCHIP	C608
2203-007271	C-CERCHIP	C703
2203-007279	C-CERCHIP	C127
2203-007279	C-CERCHIP	C712
2203-007317	C-CERCHIP	C121
2203-007317	C-CERCHIP	C123
2203-007317	C-CERCHIP	C717
2203-007369	C-CERCHIP	C119
2203-007369	C-CERCHIP	C124
2203-007369	C-CERCHIP	C300
2203-007369	C-CERCHIP	C301
2203-007369	C-CERCHIP	C303
2203-007369	C-CERCHIP	C308
2203-007369	C-CERCHIP	C312
2203-007369	C-CERCHIP	C314
2203-007369	C-CERCHIP	C316
2203-007369	C-CERCHIP	C428
2203-007369	C-CERCHIP	C509
2203-007369	C-CERCHIP	C516
2203-007369	C-CERCHIP	C517
2404-001339	C-TACHIP	C118
2404-001339	C-TACHIP	C275

SEC CODE	Design LOC	Description
2404-001377	C-TACHIP	C444
2404-001381	C-TACHIP	C607
2404-001381	C-TACHIP	TA200
2404-001381	C-TACHIP	TA201
2404-001474	C-TACHIP	C448
2404-001496	C-TACHIP	TA100
2404-001557	C-TACHIP	C524
2404-001557	C-TACHIP	TA800
2703-001747	INDUCTOR-SMD	L202
2703-001750	INDUCTOR-SMD	C221
2703-001750	INDUCTOR-SMD	L216
2703-002170	INDUCTOR-SMD	L112
2703-002176	INDUCTOR-SMD	L211
2703-002198	INDUCTOR-SMD	L200
2703-002198	INDUCTOR-SMD	L226
2703-002200	INDUCTOR-SMD	C101
2703-002281	INDUCTOR-SMD	L110
2703-002367	INDUCTOR-SMD	L118
2703-002367	INDUCTOR-SMD	L224
2703-002367	INDUCTOR-SMD	L225
2703-002649	INDUCTOR-SMD	C106
2703-002649	INDUCTOR-SMD	C110
2703-002708	INDUCTOR-SMD	L117
2703-002782	INDUCTOR-SMD	L116
2703-002793	INDUCTOR-SMD	L104
2703-002793	INDUCTOR-SMD	L223
2703-002795	INDUCTOR-SMD	L103
2703-002795	INDUCTOR-SMD	L105
2703-002795	INDUCTOR-SMD	L205
2703-002842	INDUCTOR-SMD	L221
2703-002858	INDUCTOR-SMD	L114

SEC CODE	Design LOC	Description
2703-002866	INDUCTOR-SMD	L701
2703-002870	INDUCTOR-SMD	L100
2703-002900	INDUCTOR-SMD	L107
2703-002900	INDUCTOR-SMD	L108
2703-002901	INDUCTOR-SMD	L203
2703-002906	INDUCTOR-SMD	C223
2703-002907	INDUCTOR-SMD	L217
2703-002910	INDUCTOR-SMD	L111
2703-002918	INDUCTOR-SMD	C216
2703-002918	INDUCTOR-SMD	C255
2703-002958	INDUCTOR-SMD	L109
2703-003205	INDUCTOR-SMD	L800
2703-003205	INDUCTOR-SMD	L801
2703-003258	INDUCTOR-SMD	L400
2703-003258	INDUCTOR-SMD	L401
2703-003258	INDUCTOR-SMD	L402
2703-003258	INDUCTOR-SMD	L403
2703-003502	INDUCTOR-SMD	L700
2703-003698	INDUCTOR-SMD	L115
2801-004466	CRYSTAL-SMD	OSC400
2801-004815	CRYSTAL-SMD	OSC100
2809-001345	OSCILLATOR-VCTCXO	OSC200
2901-001413	FILTER-EMISMD	F702
2901-001413	FILTER-EMISMD	F703
2901-001413	FILTER-EMISMD	F704
2901-001413	FILTER-EMISMD	F705
2901-001413	FILTER-EMISMD	F706
2901-001413	FILTER-EMISMD	F707
2901-001413	FILTER-EMISMD	F708
2901-001413	FILTER-EMISMD	F709
2901-001454	FILTER-EMI/ESD	F700

SEC CODE	Design LOC	Description
2901-001454	FILTER-EMI/ESD	F701
2904-001759	FILTER-SAW	F100
2904-001778	FILTER-SAW	F201
2904-001785	FILTER-SAW	F200
2904-001789	FILTER-SAW	F202
2904-001864	FILTER-SAW	F203
2910-000034	DUPLEXER-SAW	DUF202
2910-000057	DUPLEXER-SAW	DUF201
2910-000058	DUPLEXER-SAW	DUF200
2911-000128	DUPLEXER-FEM	MODULE100
3301-001438	BEAD-SMD	L507
3301-001438	BEAD-SMD	L508
3301-001756	BEAD-SMD	L102
3301-001812	BEAD-SMD	L500
3301-001812	BEAD-SMD	L504
3301-001812	BEAD-SMD	L505
3301-001812	BEAD-SMD	L506
3301-001812	BEAD-SMD	L509
3301-001812	BEAD-SMD	L510
3404-001303	SWITCH-TACT	TAC800
3404-001303	SWITCH-TACT	TAC801
3705-001448	CONNECTOR-COAXIAL	RFC100
3705-001503	CONNECTOR-COAXIAL	RFS100
3711-005296	HEADER-BOARDTOBOARD	HEA801
3711-005550	HEADER-BOARDTOBOARD	CN301
3711-005618	HEADER-BOARDTOBOARD	HEA702
3711-005954	HEADER-BOARDTOBOARD	HEA800
3711-006078	HEADER-BATTERY	BTC400
3711-006615	HEADER-BOARDTOBOARD	HEA500
3711-006810	HEADER-BOARDTOBOARD	HEA701
3711-006919	HEADER-BOARDTOBOARD	HEA700

SEC CODE	Design LOC	Description
3722-002871	JACK-MINIUSB	IFC600
4202-001463	ANTENNA-CHIP	ANT100
4302-001130	BATTERY-LI(2ND)	BAT400
4709-001399	COUPLER-DIRECTION	CPL200
4709-001746	W-LANMODULE	U100
GH70-03349A	IPRSHIELD-CANCLIP	SC400
GH70-03349A	IPRSHIELD-CANCLIP	SC401
GH70-05216A	ICTSHIELD-FRAMETOP	SC200
GH70-05217A	ICTSHIELD-FRAMEBOT	SC201
GH71-08731A	NPRCONTACT-CAM	ANT_GPS
GH80-03320A	SOLDER-CREAM/SMTKOREA(FREE)	R500
GH80-03320A	SOLDER-CREAM/SMTKOREA(FREE)	R700
GH80-03320A	SOLDER-CREAM/SMTKOREA(FREE)	R701
GH80-03321A	SOLDER-CREAM/DHDMR(FREE)	R103
GH80-03321A	SOLDER-CREAM/DHDMR(FREE)	R340
GH80-03321A	SOLDER-CREAM/DHDMR(FREE)	R416
GH80-03321A	SOLDER-CREAM/DHDMR(FREE)	R516
GH80-03321A	SOLDER-CREAM/DHDMR(FREE)	R710
GH80-03321A	SOLDER-CREAM/DHDMR(FREE)	R712
GH80-03321A	SOLDER-CREAM/DHDMR(FREE)	R713
GH80-03321A	SOLDER-CREAM/DHDMR(FREE)	R810

Please consult the GSPN website (Samsung Portal) for the most recent version of the product's part list.

7. Block Diagrams

7-1. RF Block Diagram

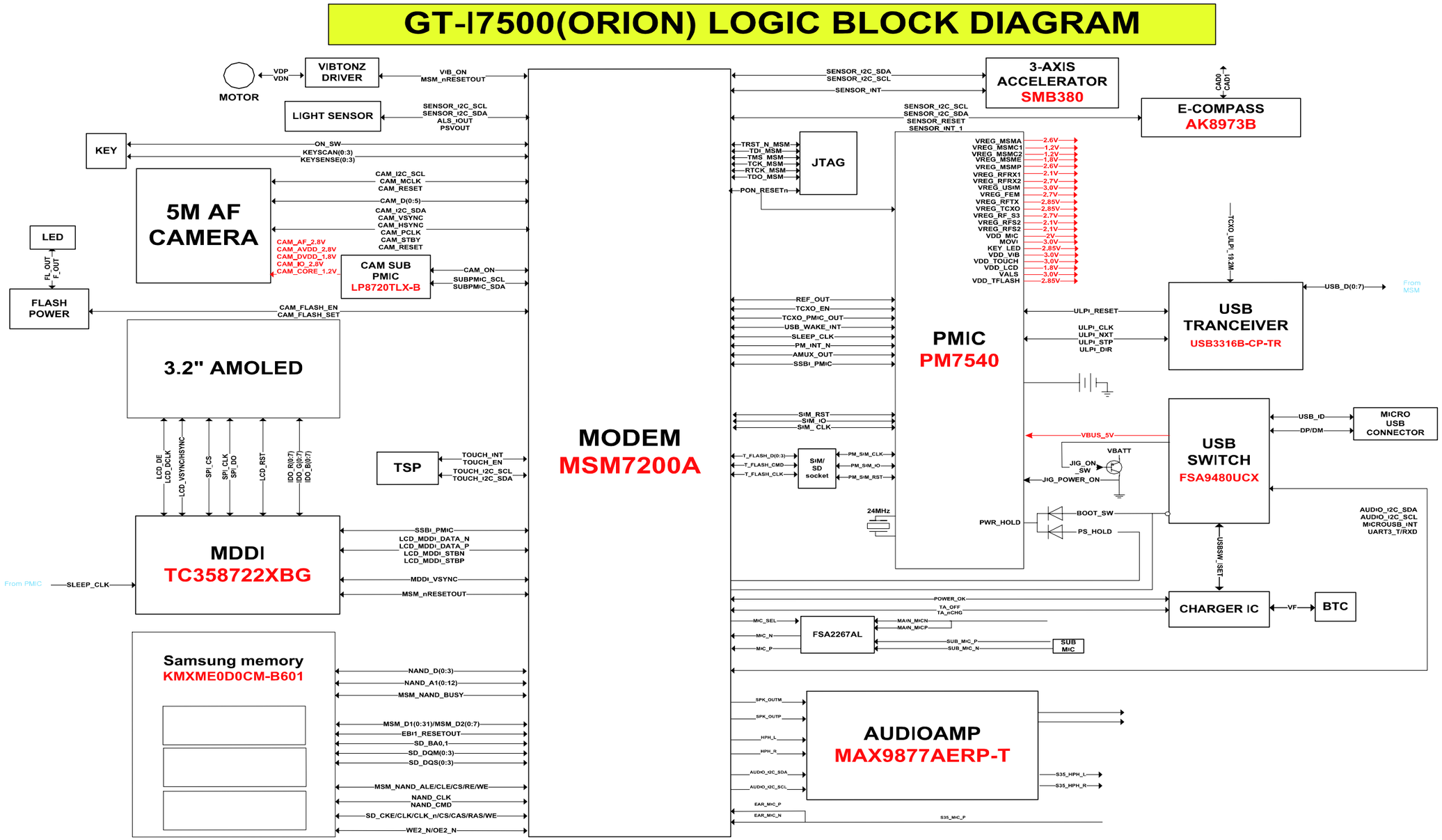

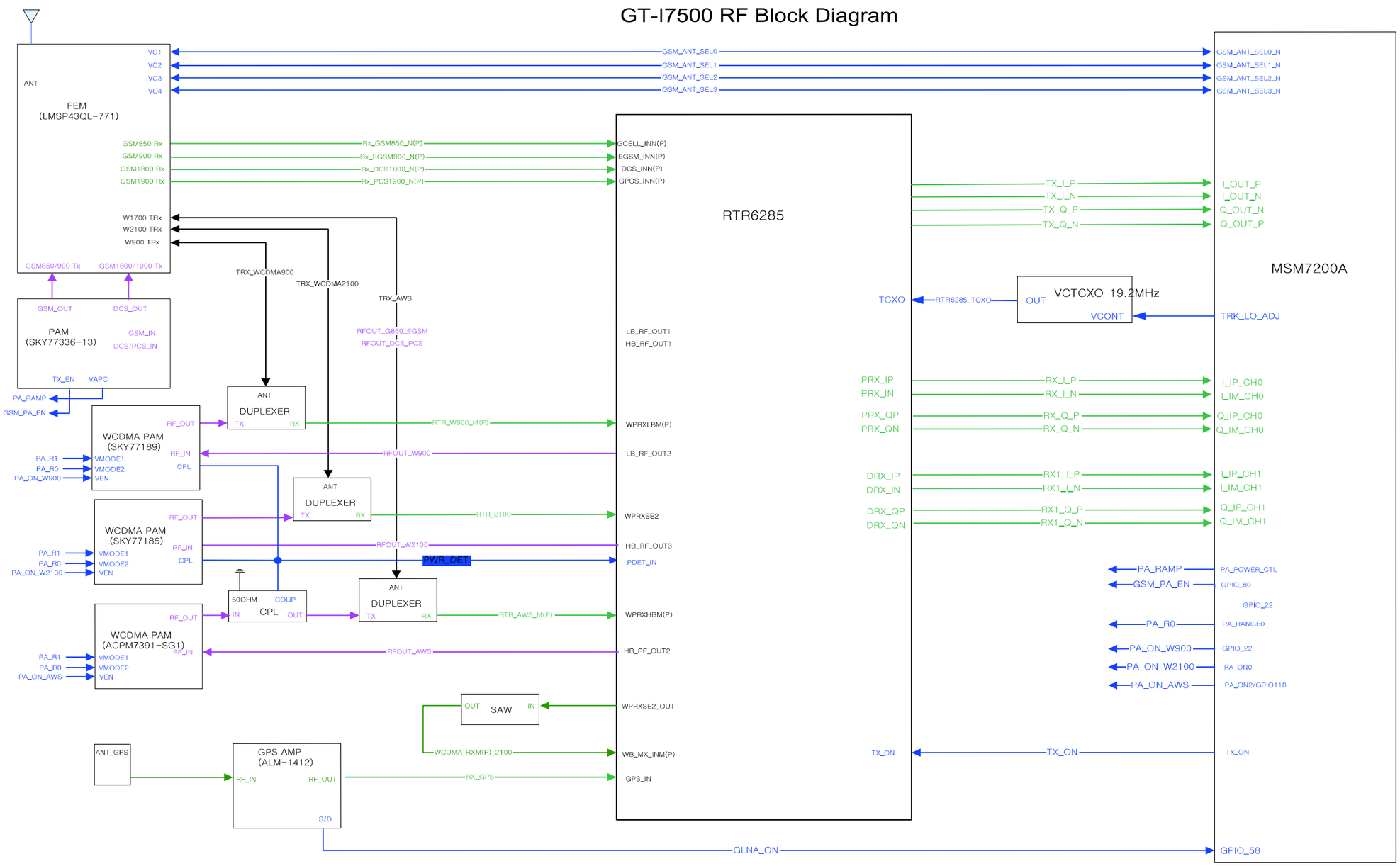

BT/WIFI MODULE

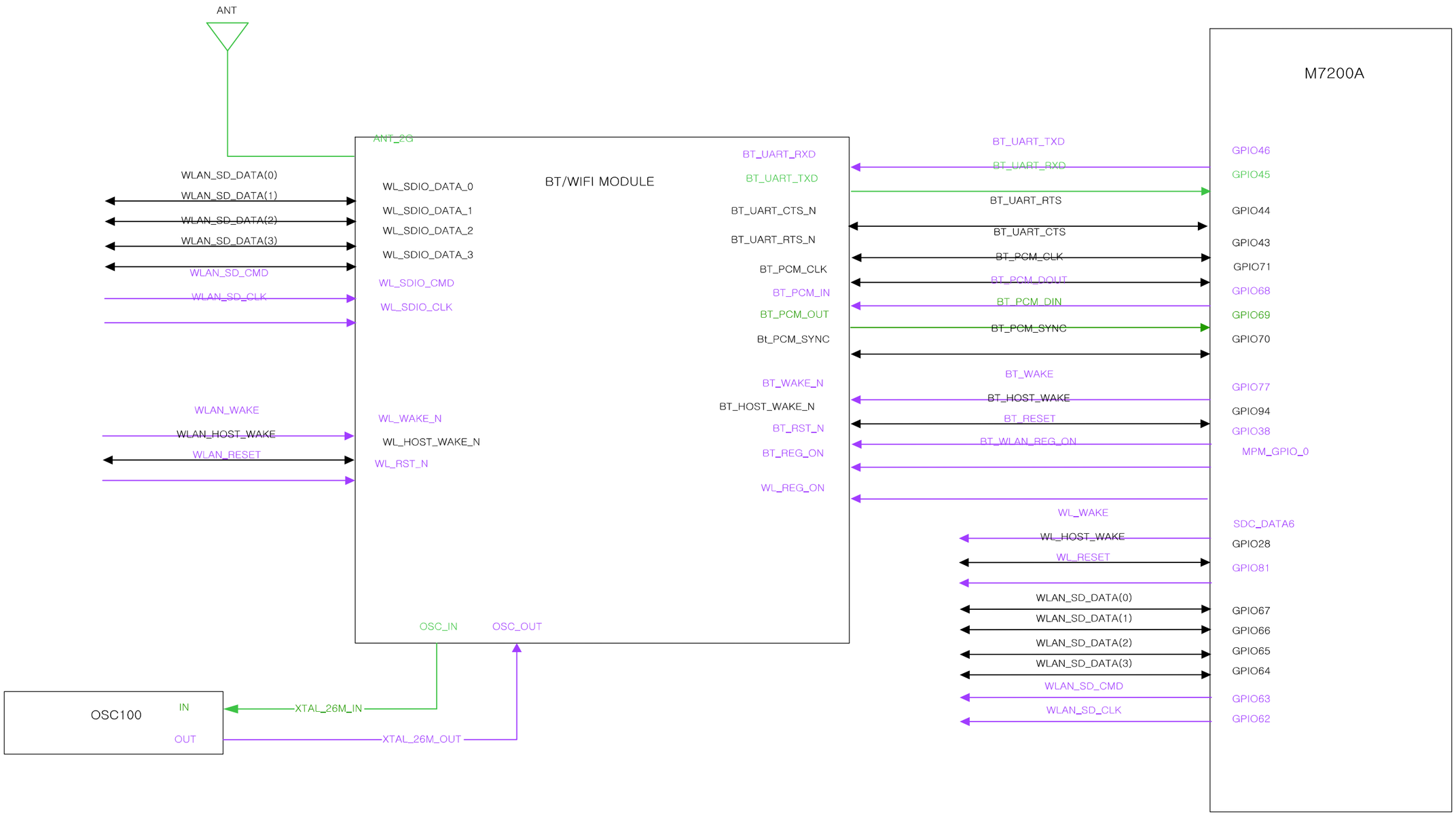

8. PCB Diagrams

Top

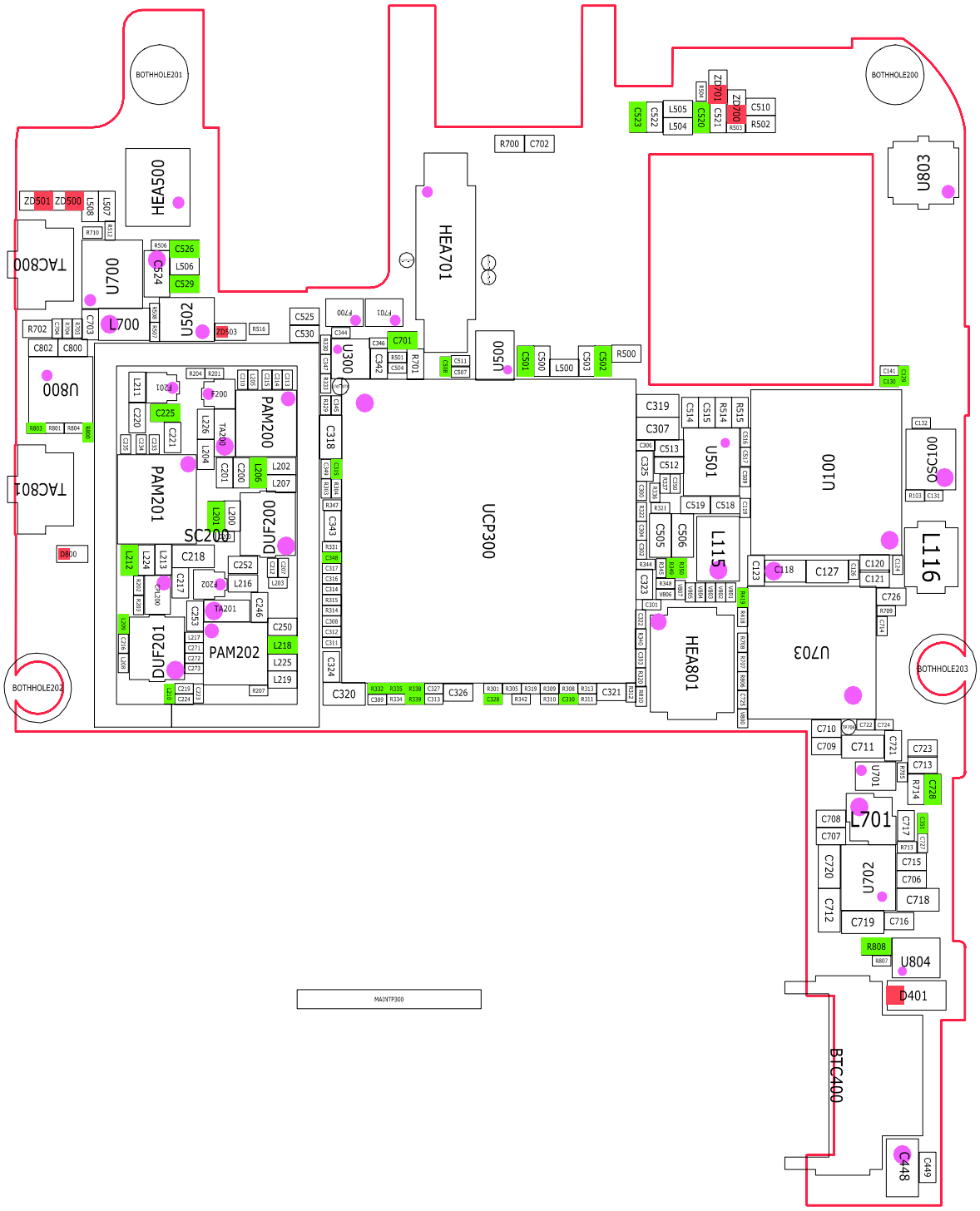

Bottom

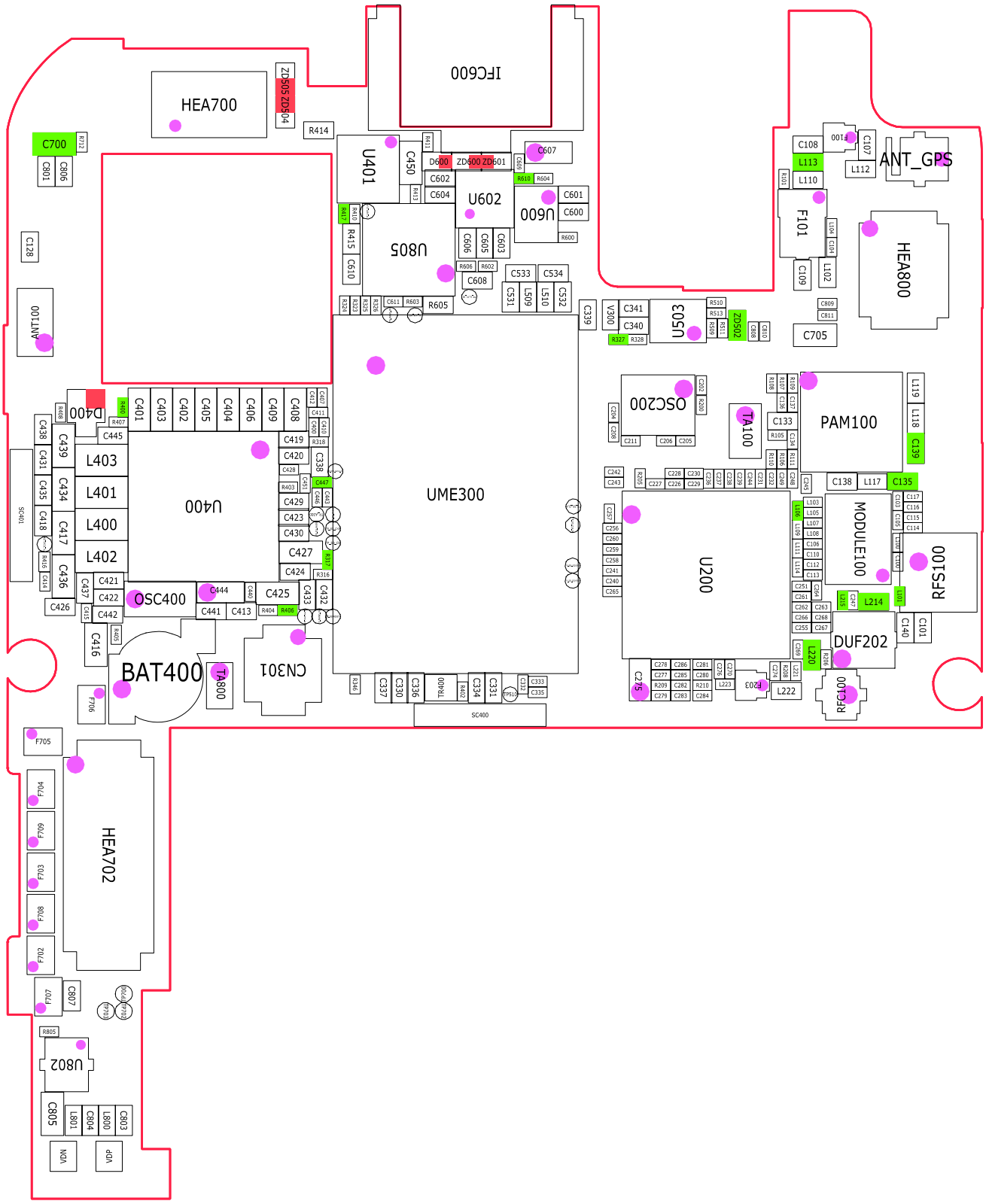

9. Flow Chart of Troubleshooting

9-1.Baseband

9-1-1. Power ON

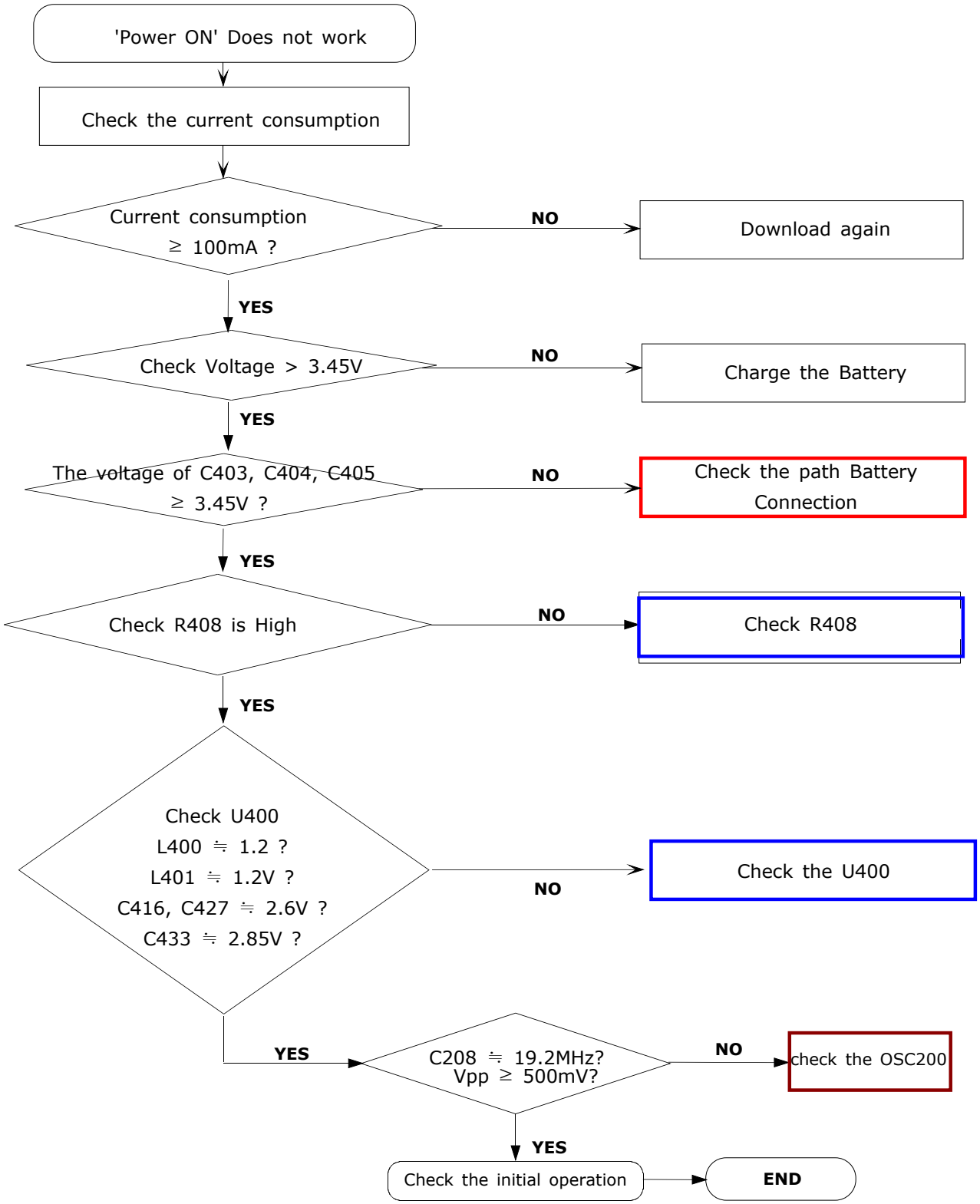

- Schematic for Power on

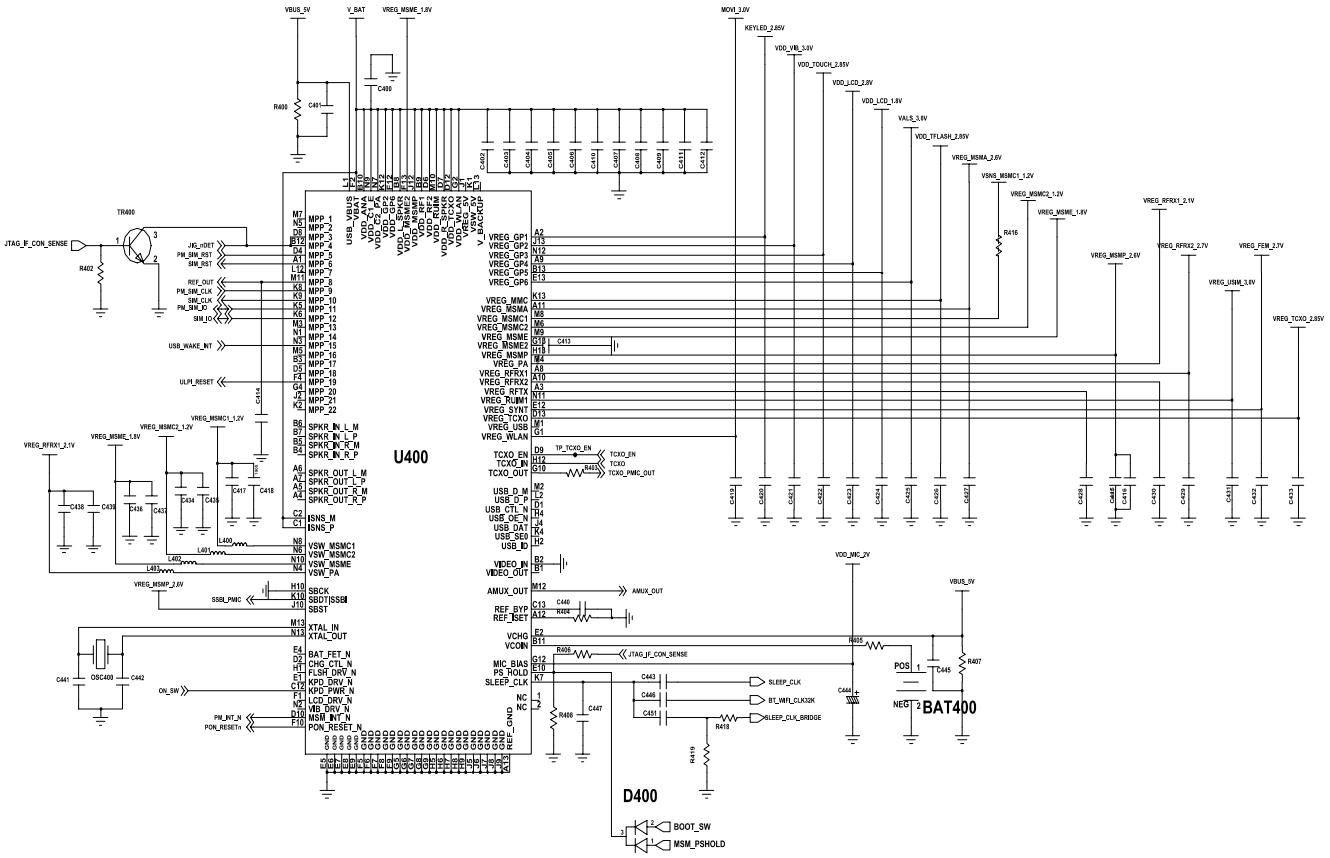

- Layout for Power on

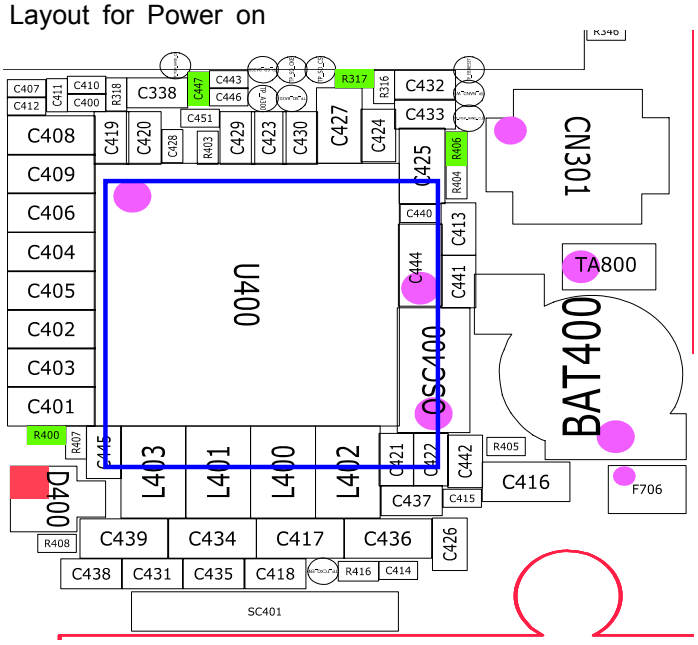

9-1-2. System Initial

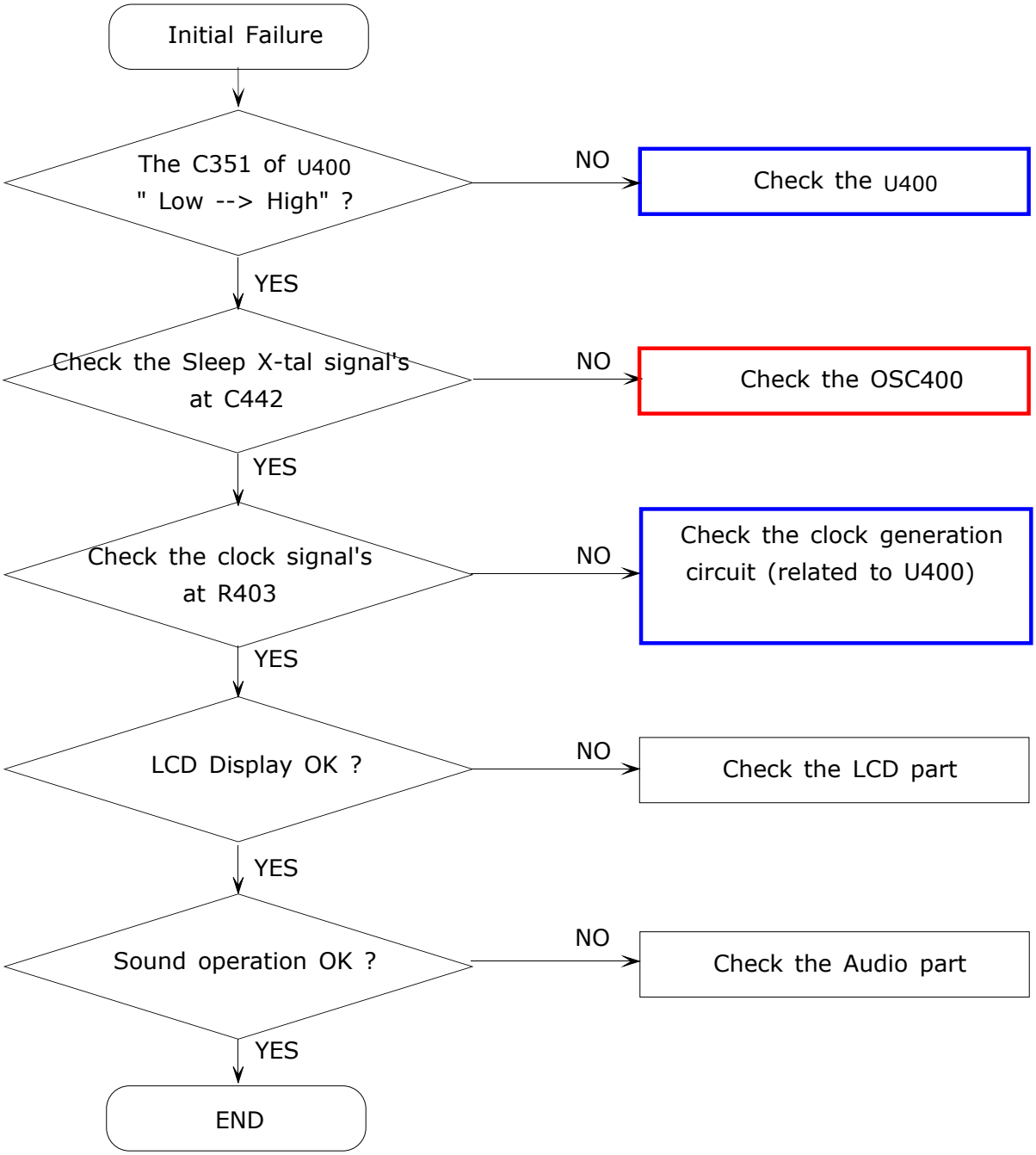

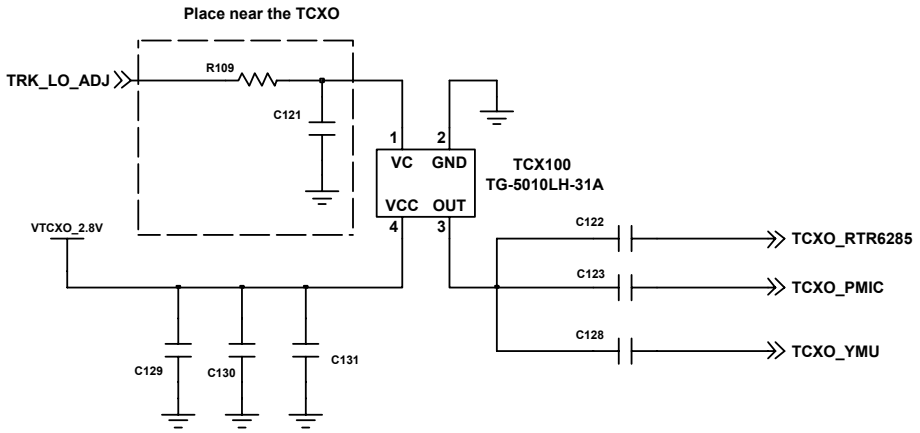

TCXO

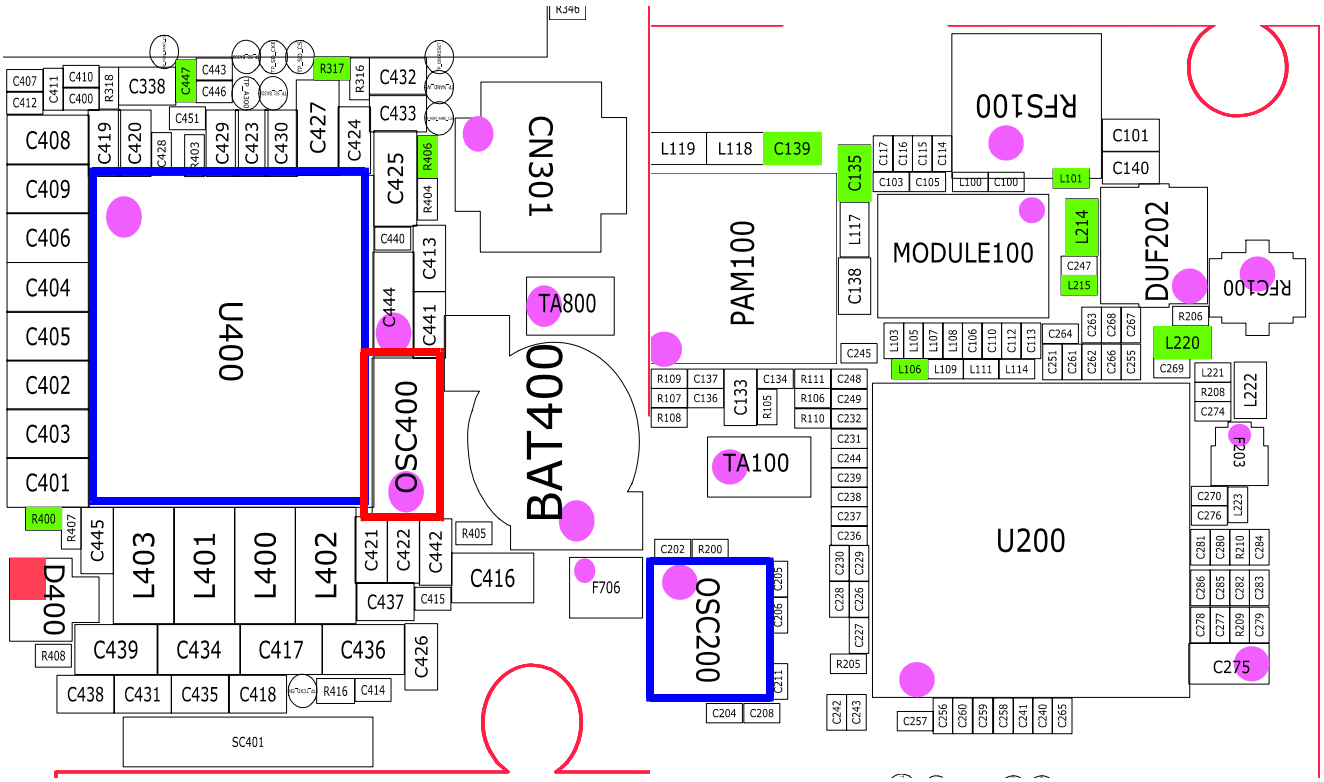

9-1-3. SIM Part

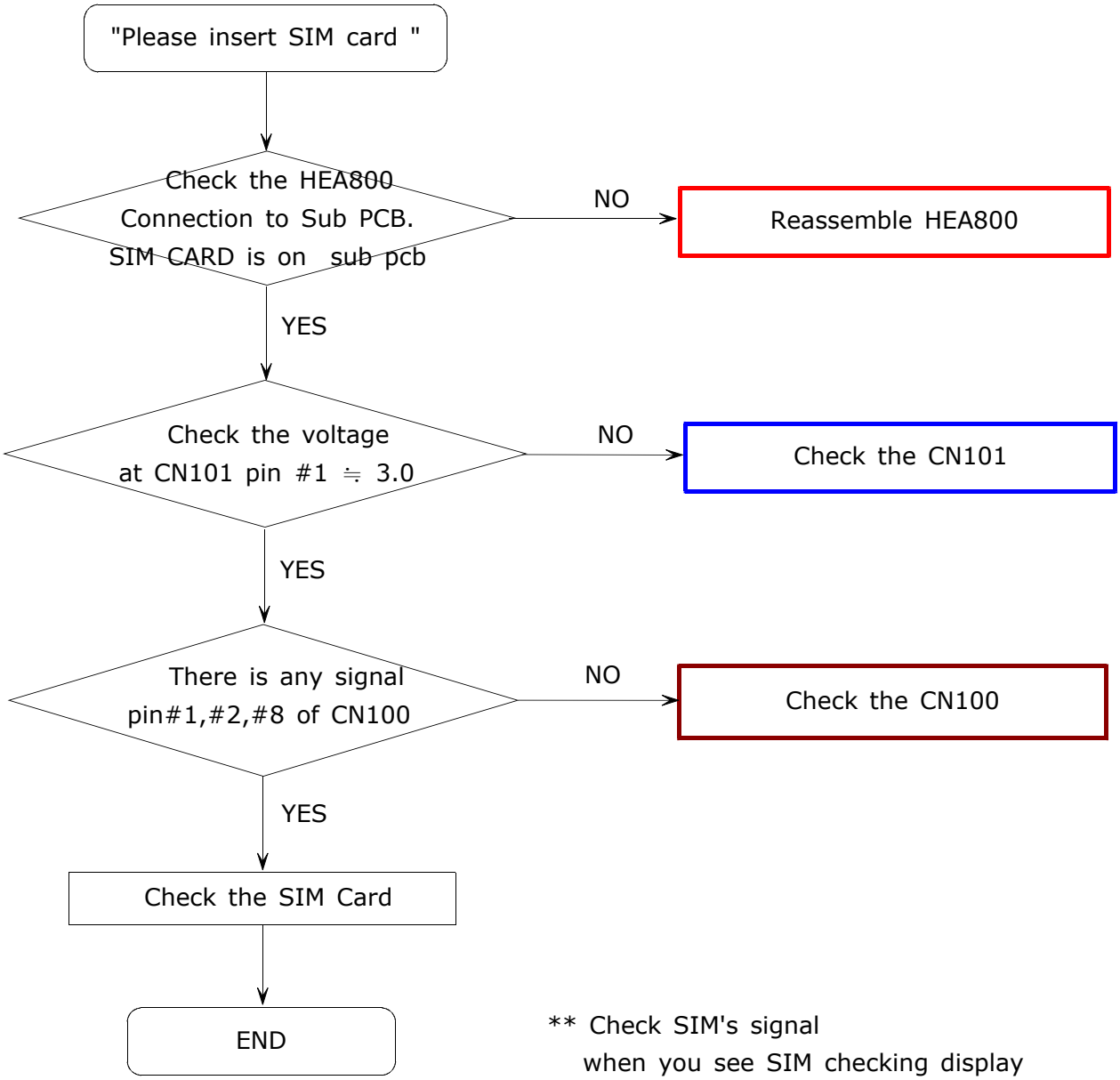

** Check SIM's signal
when you see SIM checking display

- Schematic for SIM connection

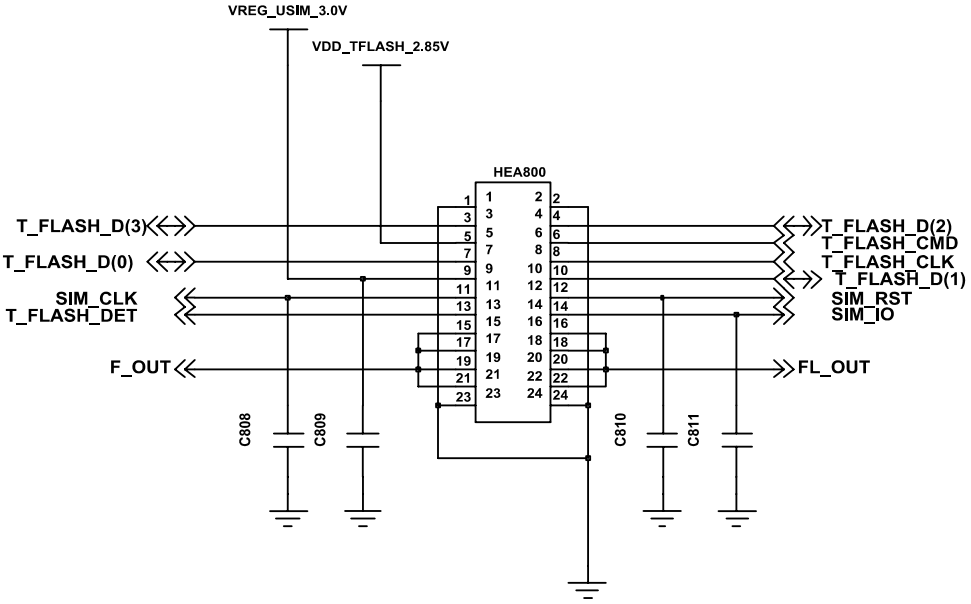

at MAIN PCB

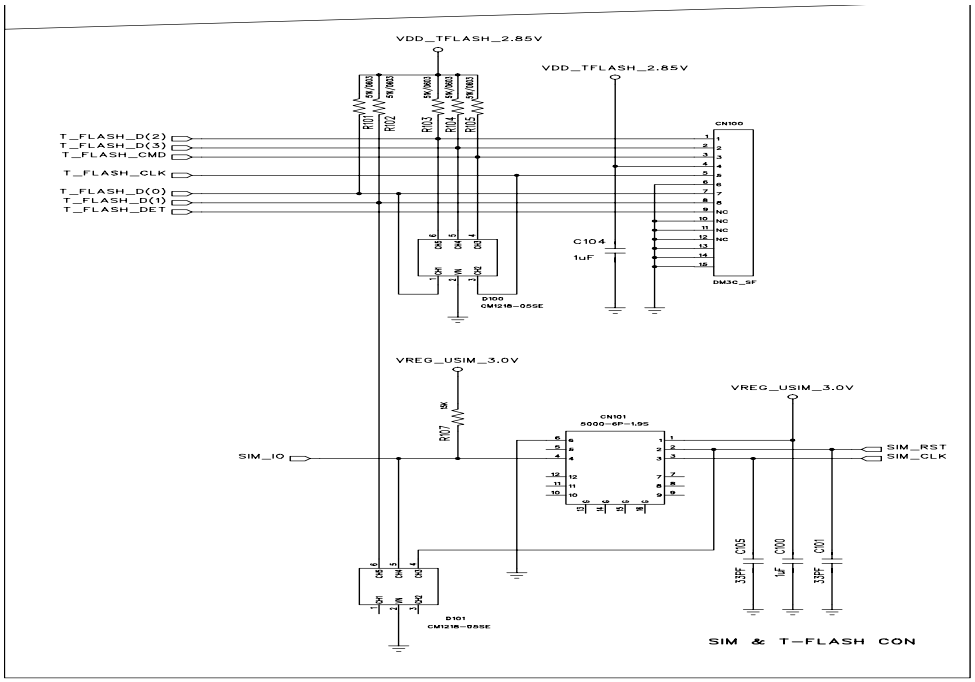

■ at Sub PCB

- Layout for SIM connection

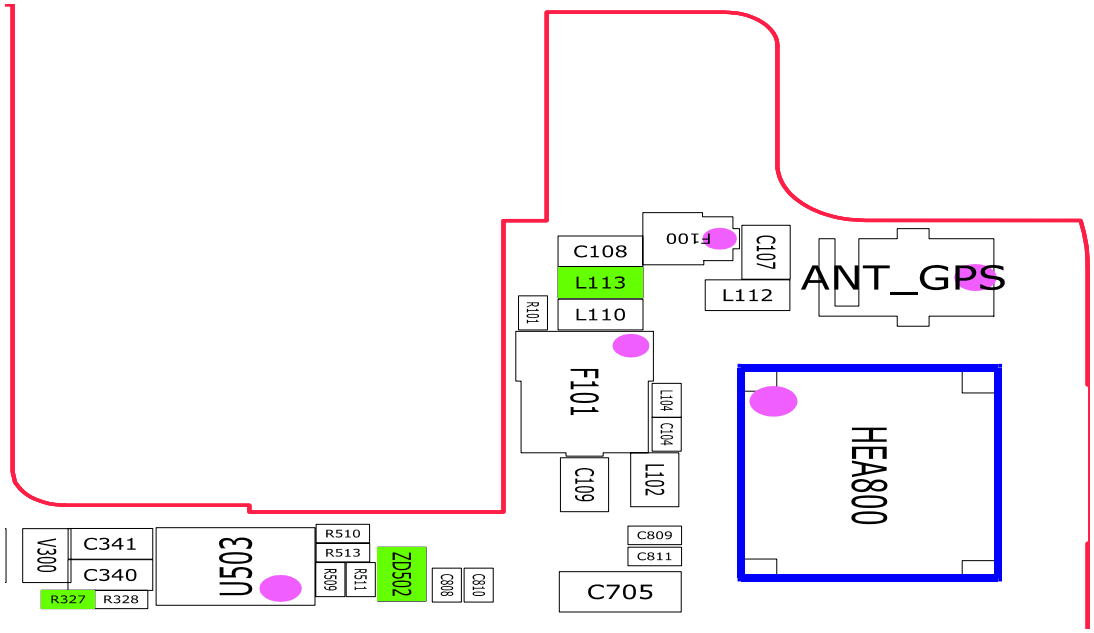

at MAIN PCB

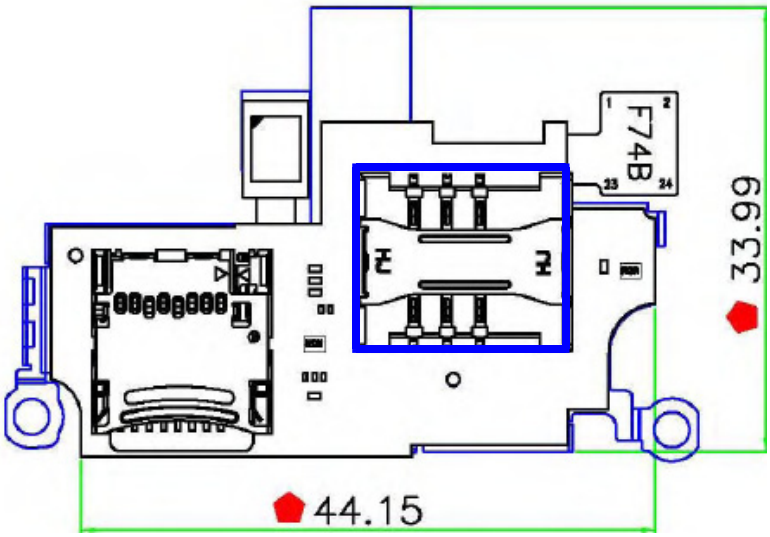

at SUB PCB

9-1-4. Charging Part

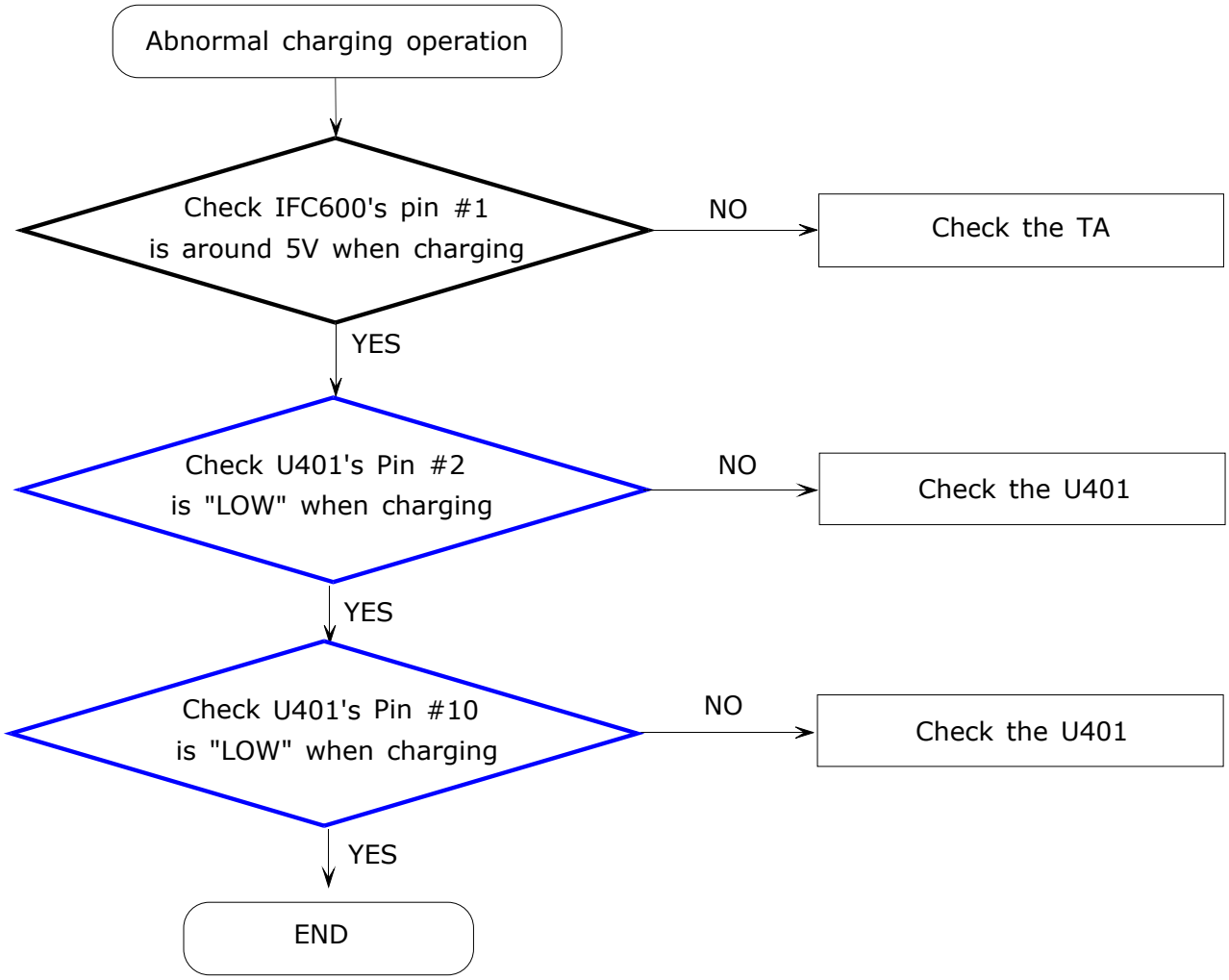

- Schematic for Charging

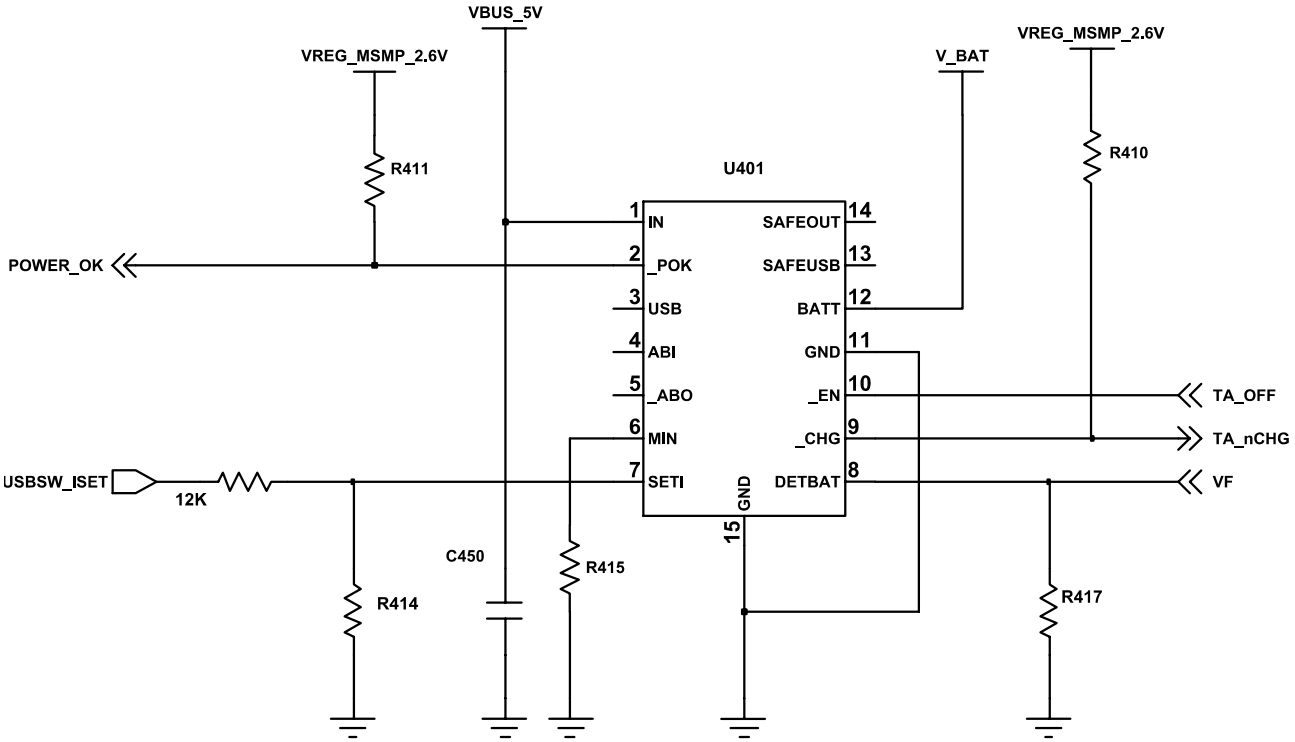

CHARGING BLOCK

- Layout for charging IC

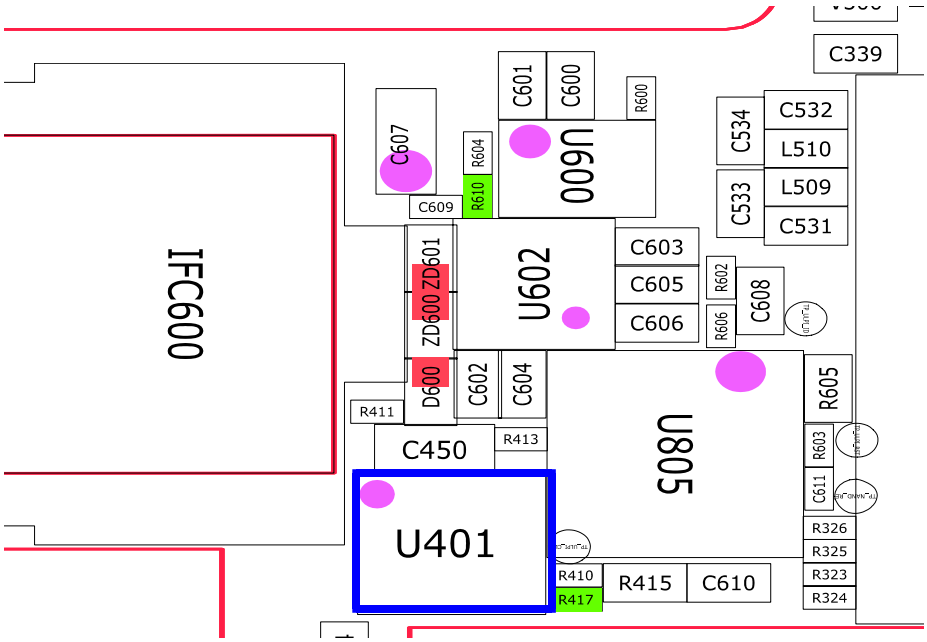

9-1-5. Microphone Part

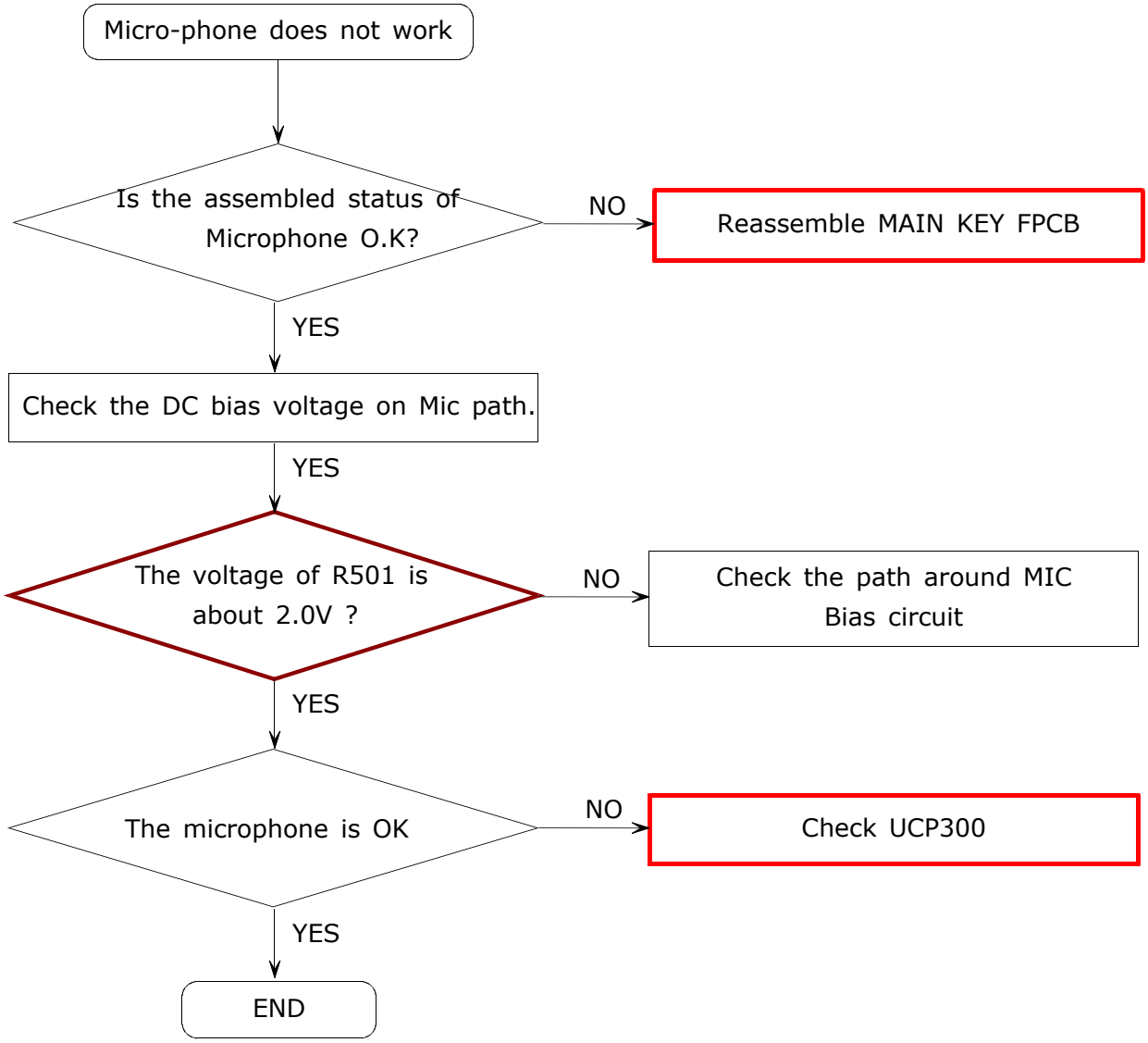

- Schematic for Microphone

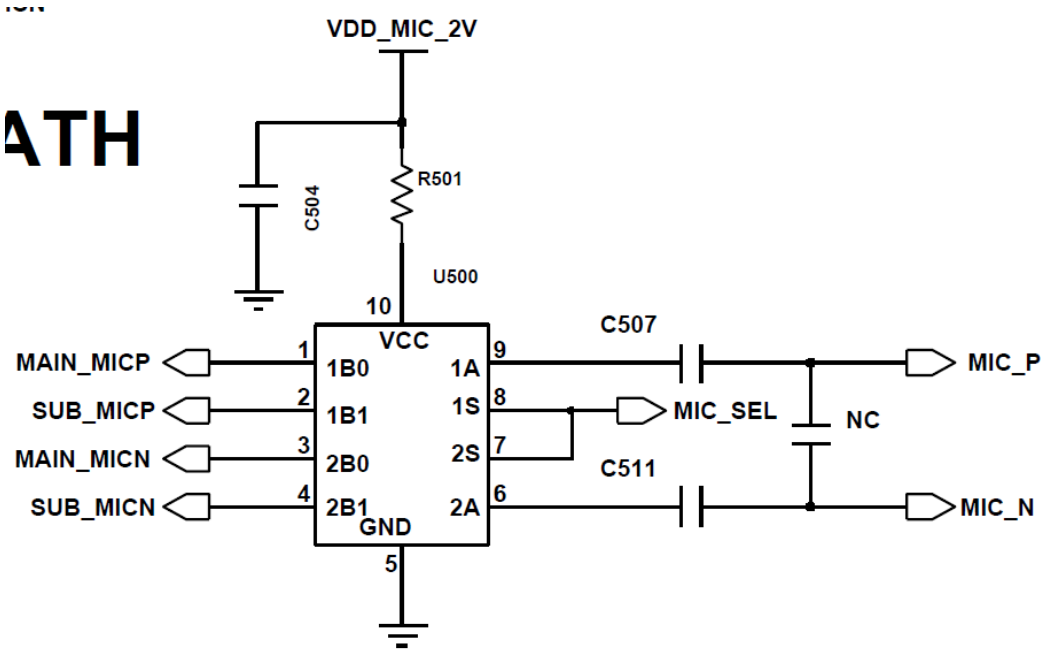

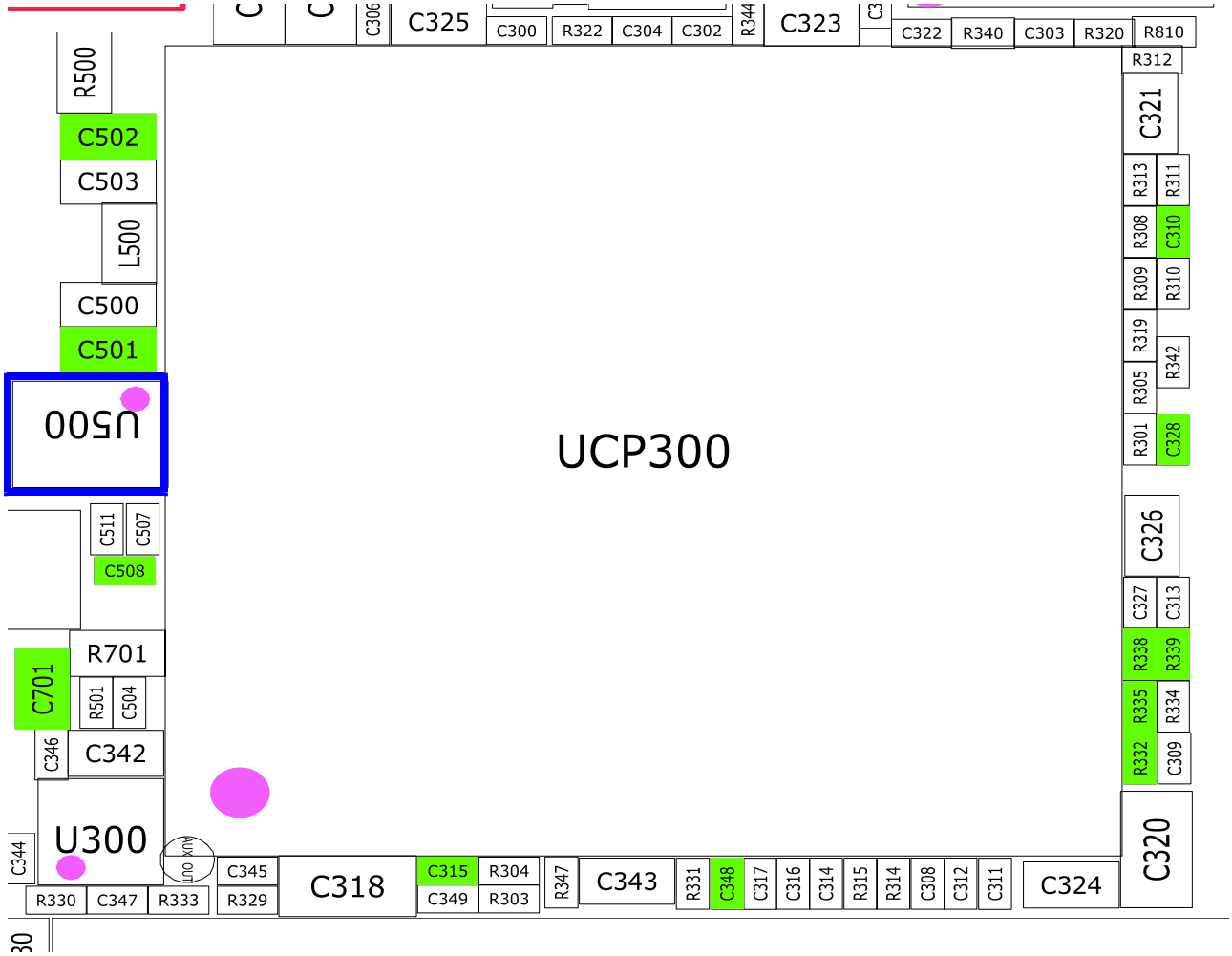

9-1-6. Speaker Part

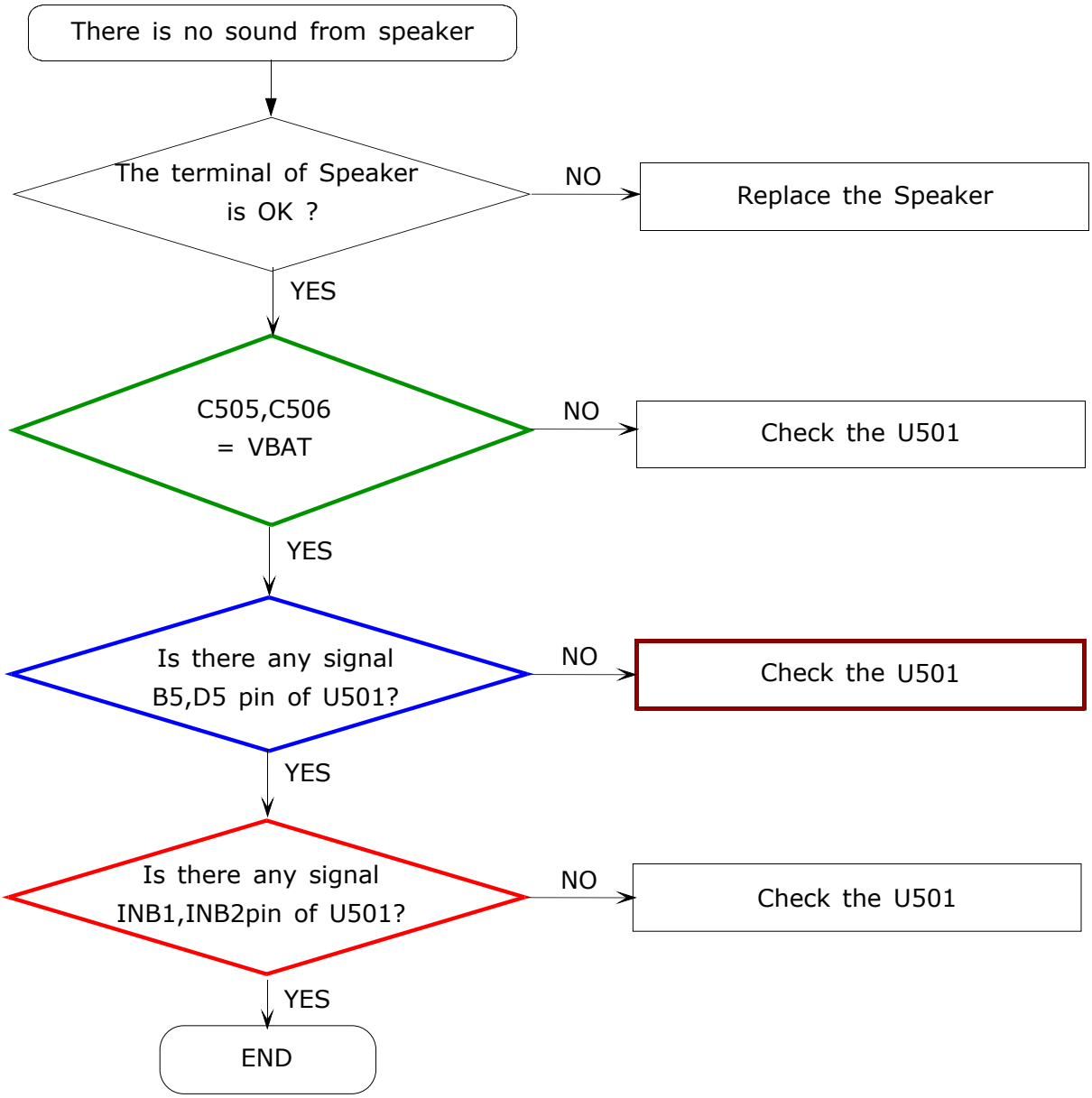

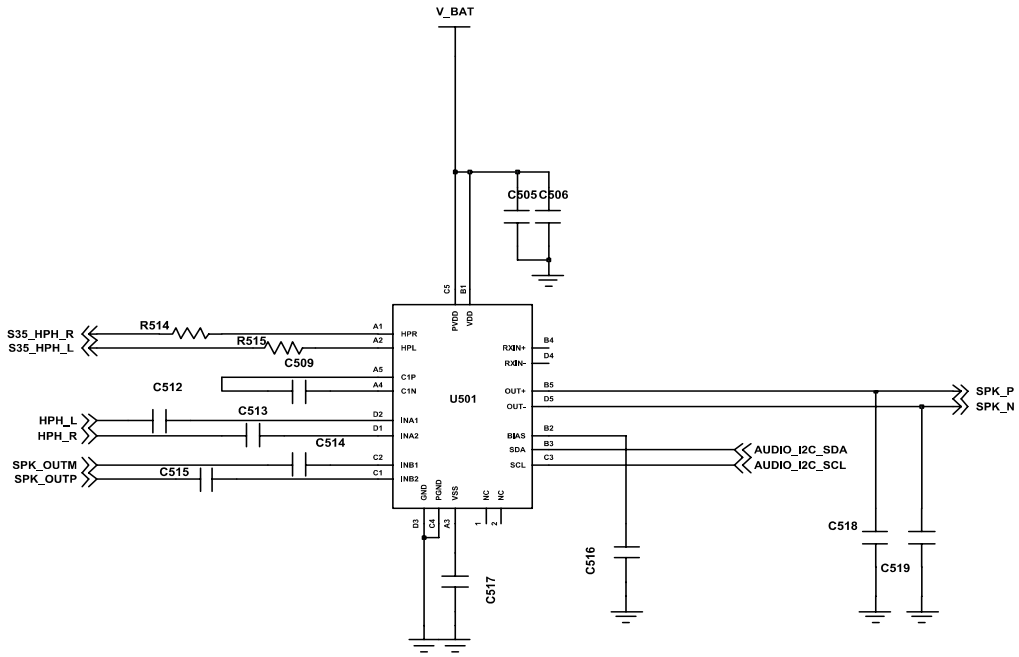

AUDIO AMP

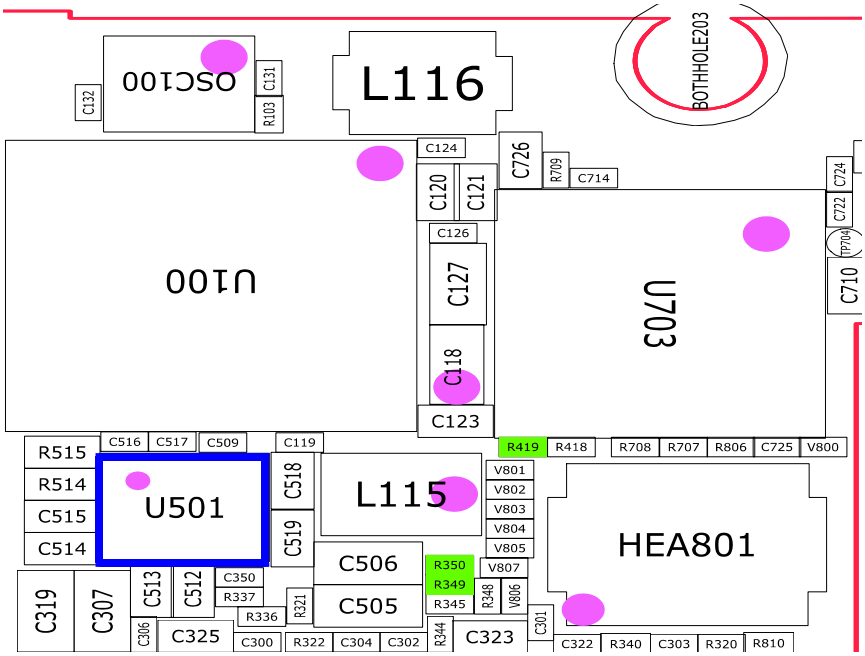

9-1-7. Receiver Part

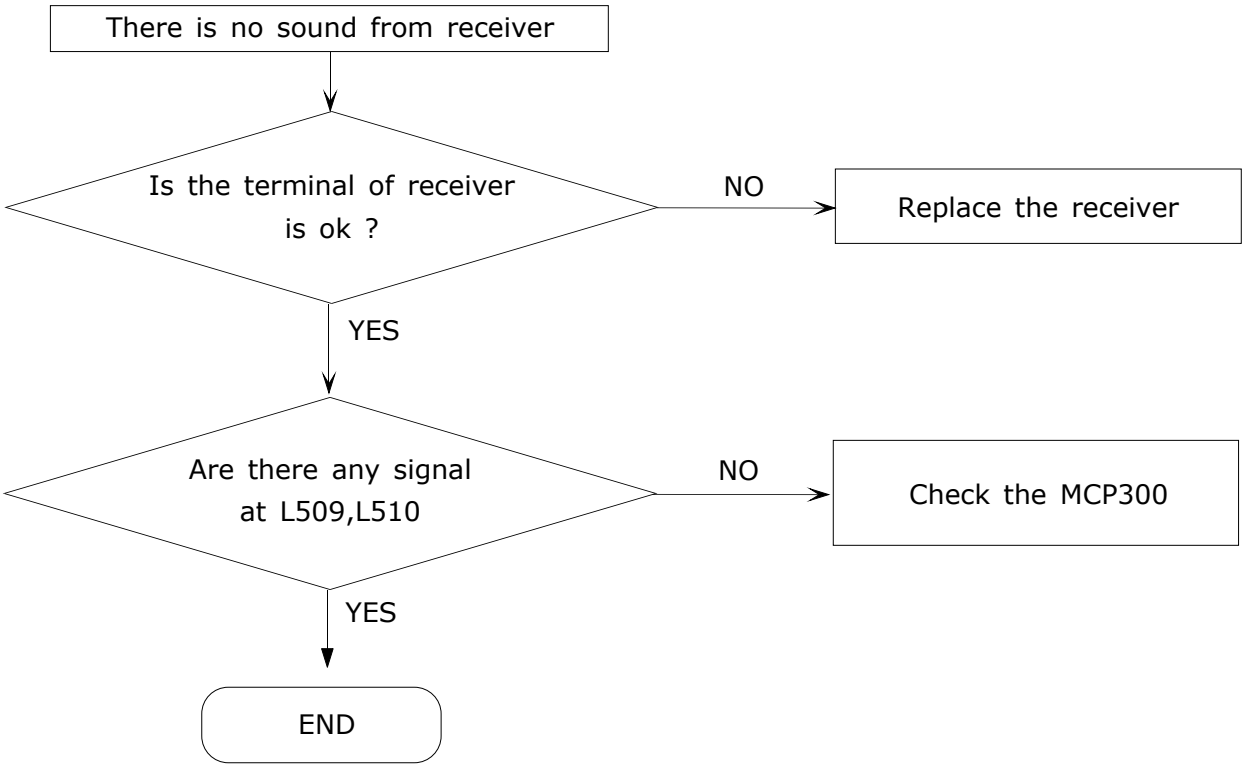

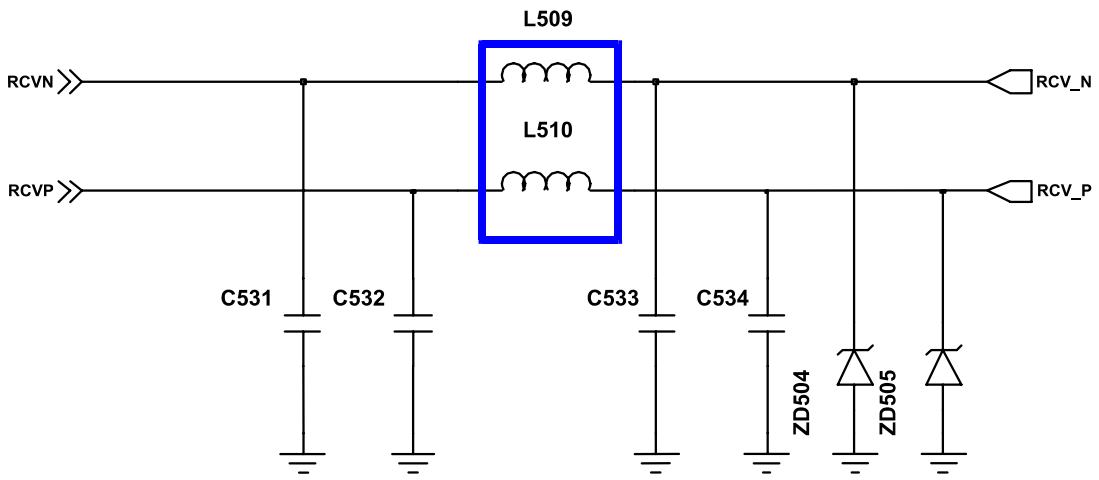

RECEIVER PATH

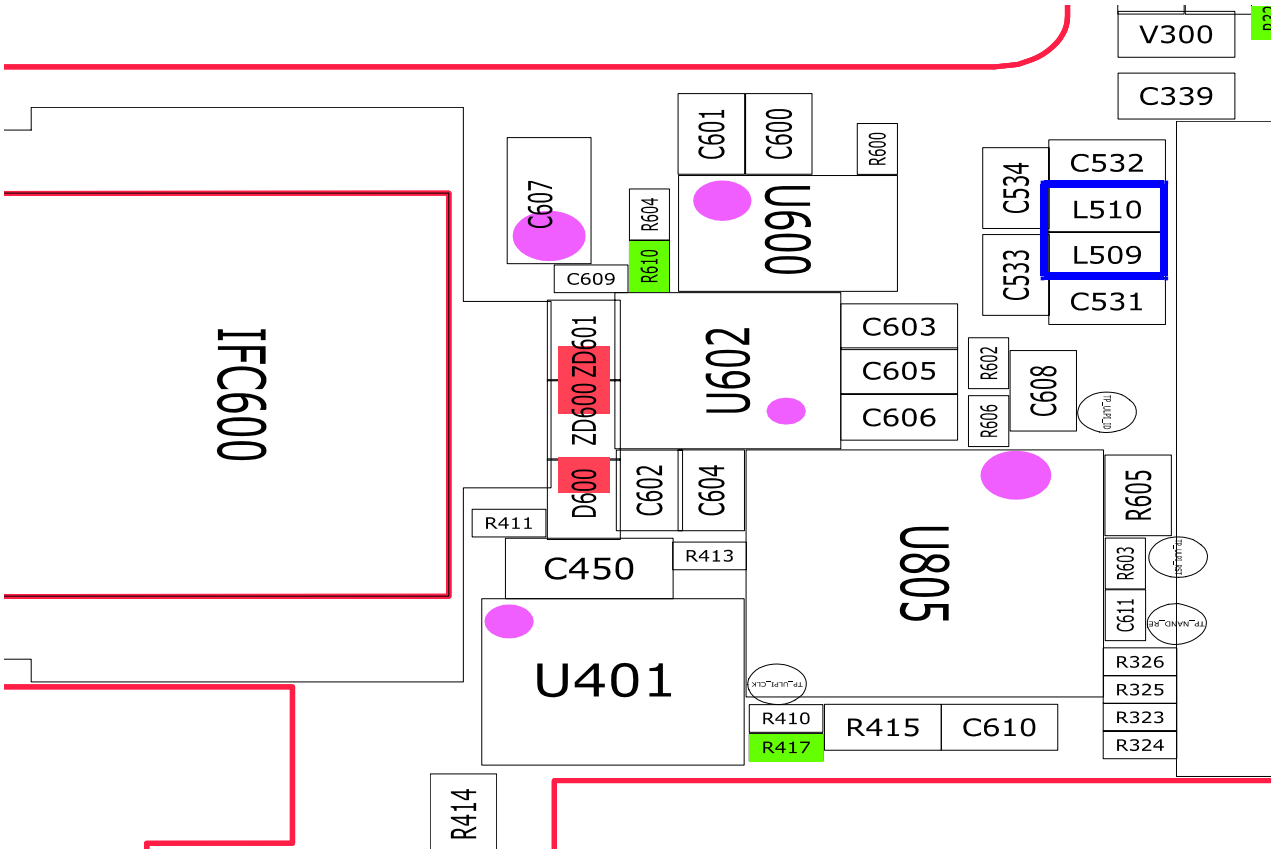

9-1-8. Headset Part

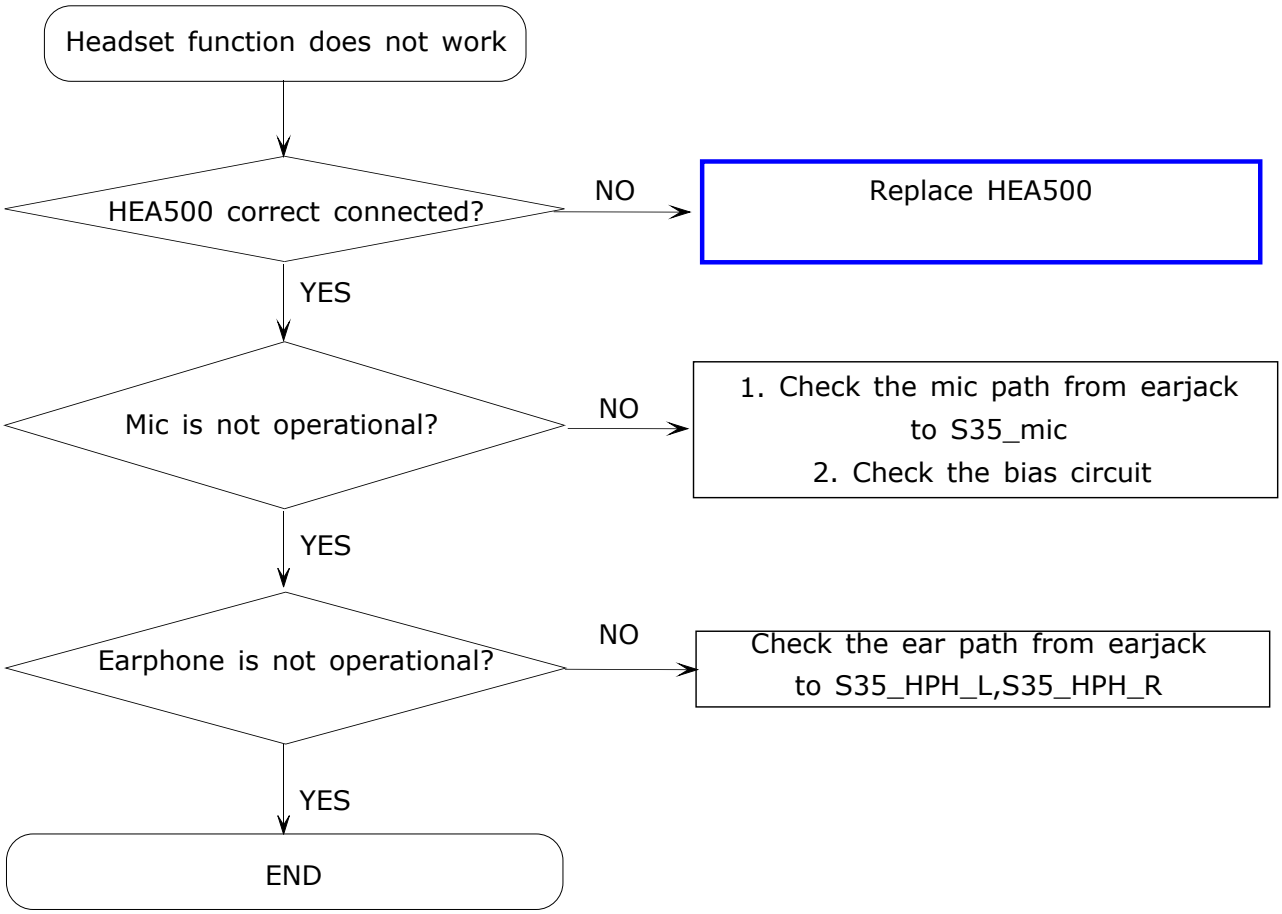

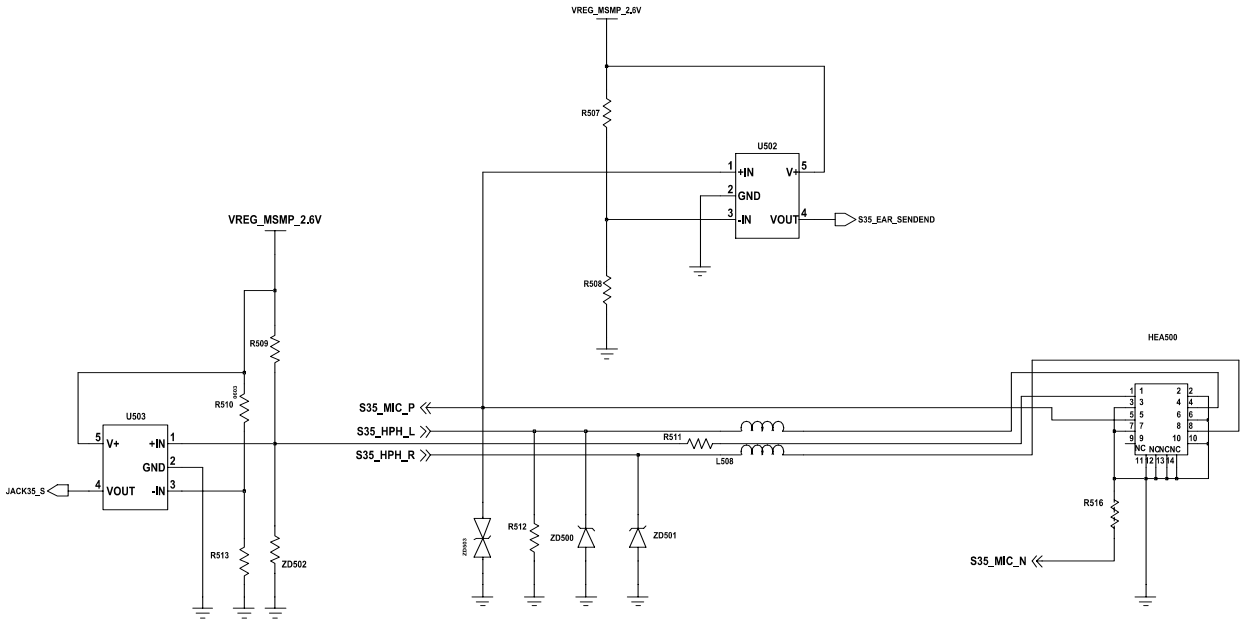

3.5PI EARJACK

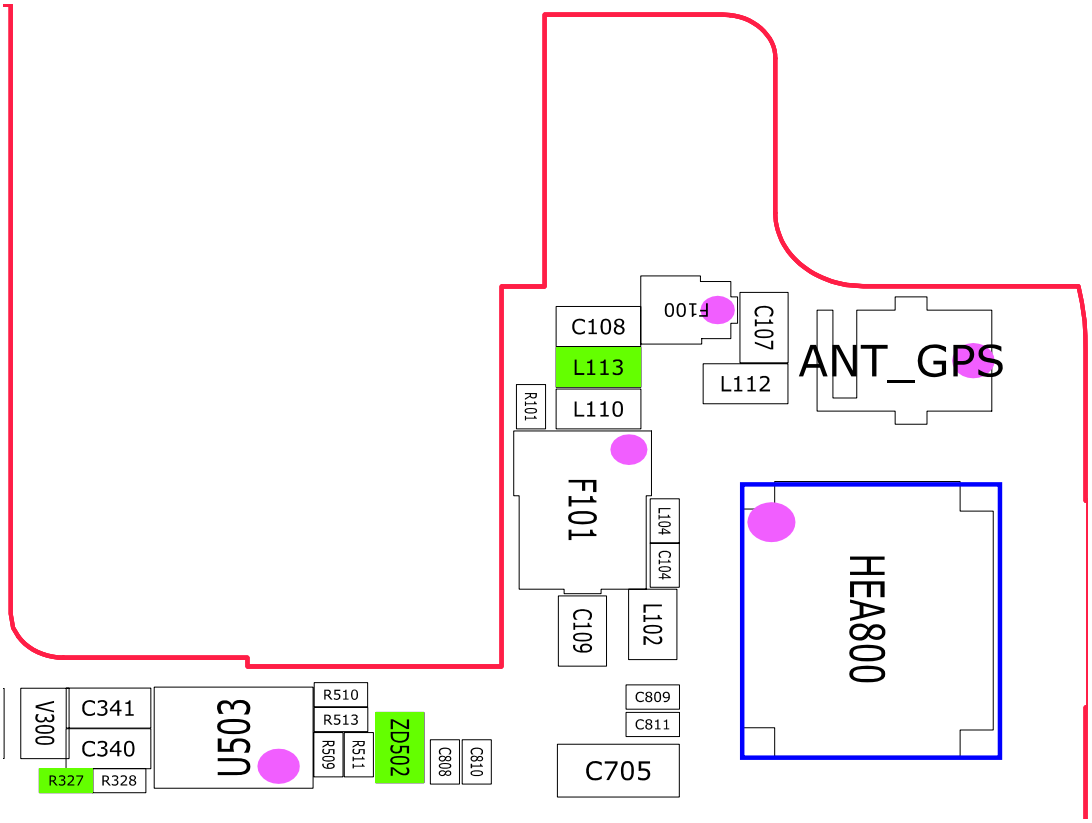

9-1-9. Camera Part (Mega and VGA)

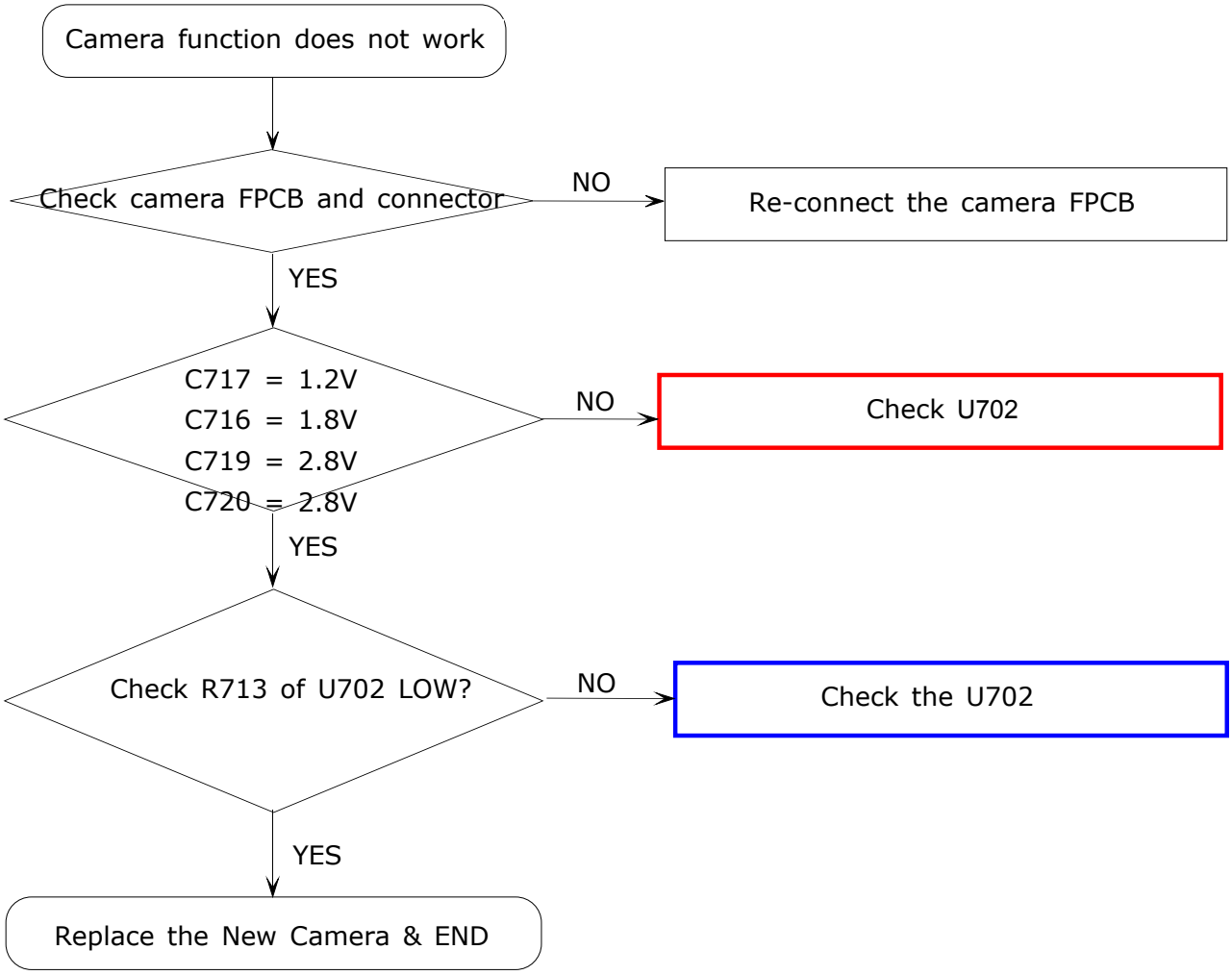

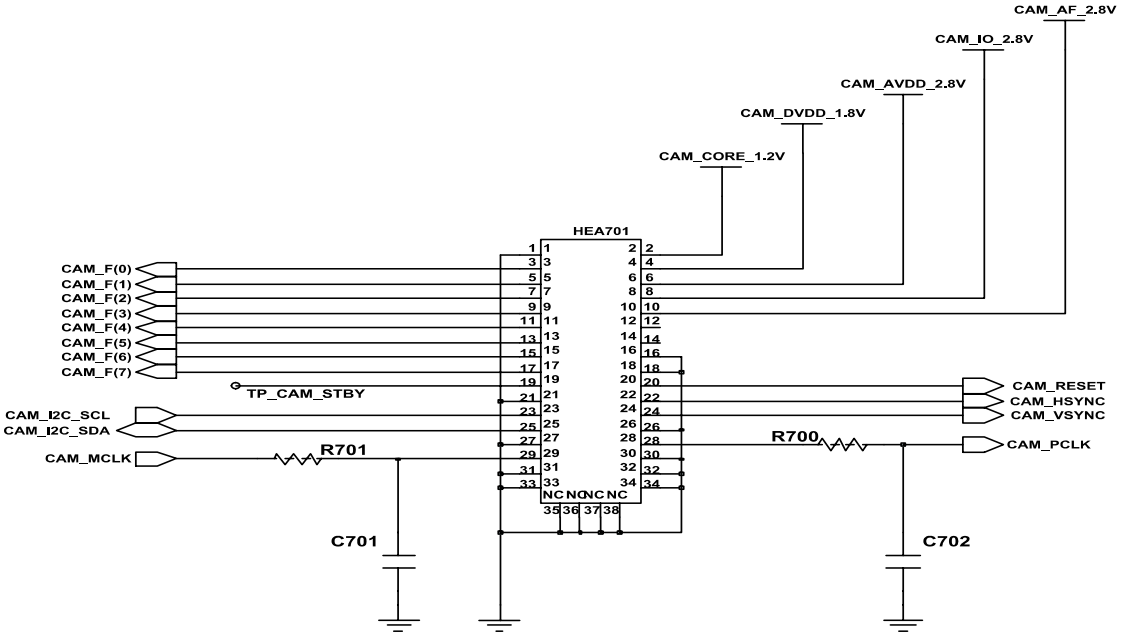

5M CAMERA CON

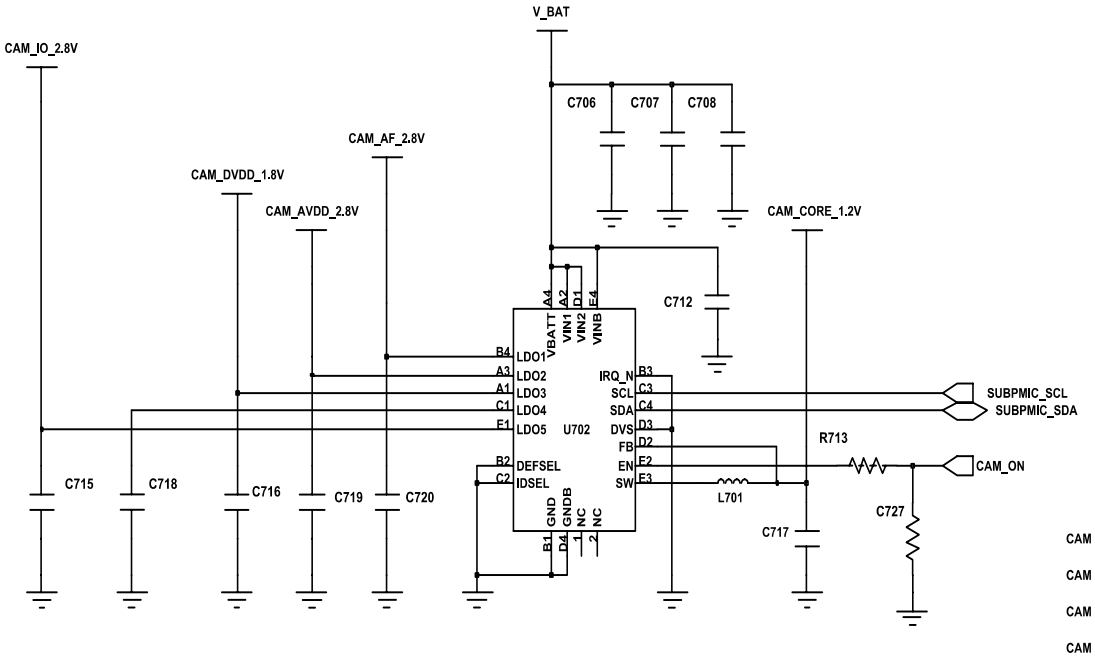

CAM SUB PMIC

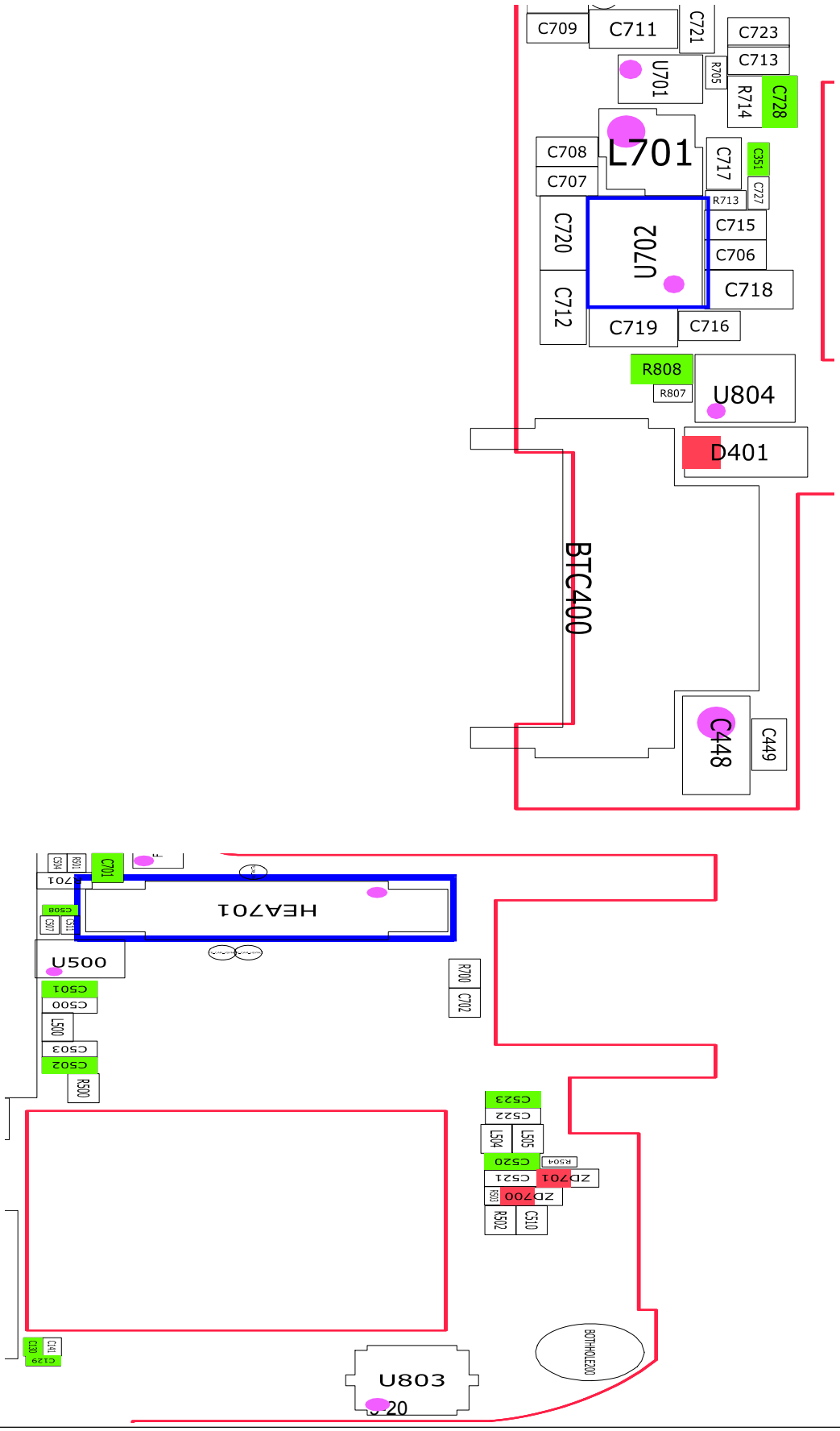
C709
C711
C721
C723
C713
U701
R705
R714
C728
L701
C708
C707
C717
C351
C727
R713
C720
U702
C715
C706
C718
C712
C719
C716
R808
R807
U804
D401
BTC400
C448
C449
C701
HEA701
U500
R700
C702
C523
C522
L504
L505
C520
R504
ZD701
C521
ZD700
R503
R502
C510
BOTHHOLE200
U803
C129
C130
C141

9-2.RF
9-2-1. EGSM850 RX

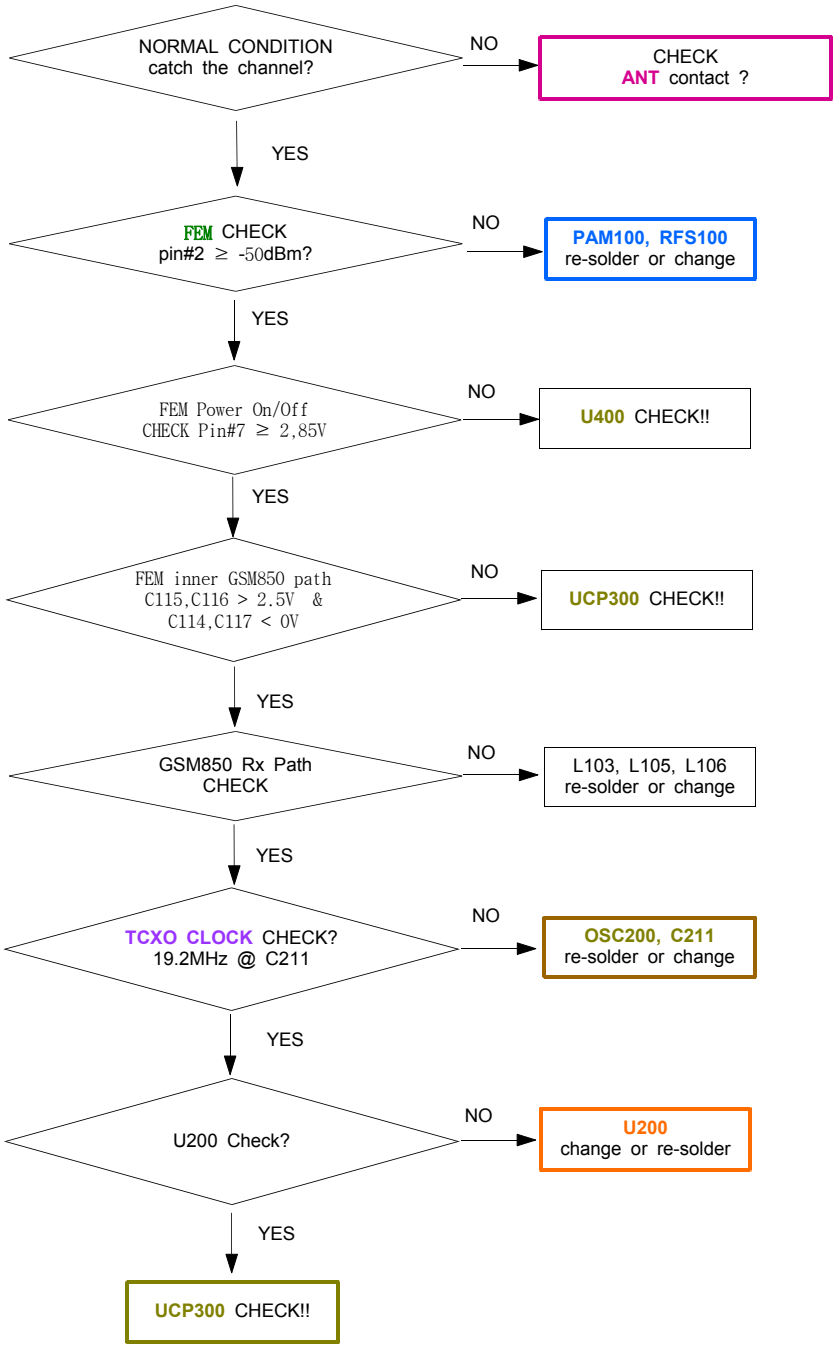

9-2-1. EGSM850 RX

Band : GSM850
CELL POWER : -50dBm
Channel : 160Ch

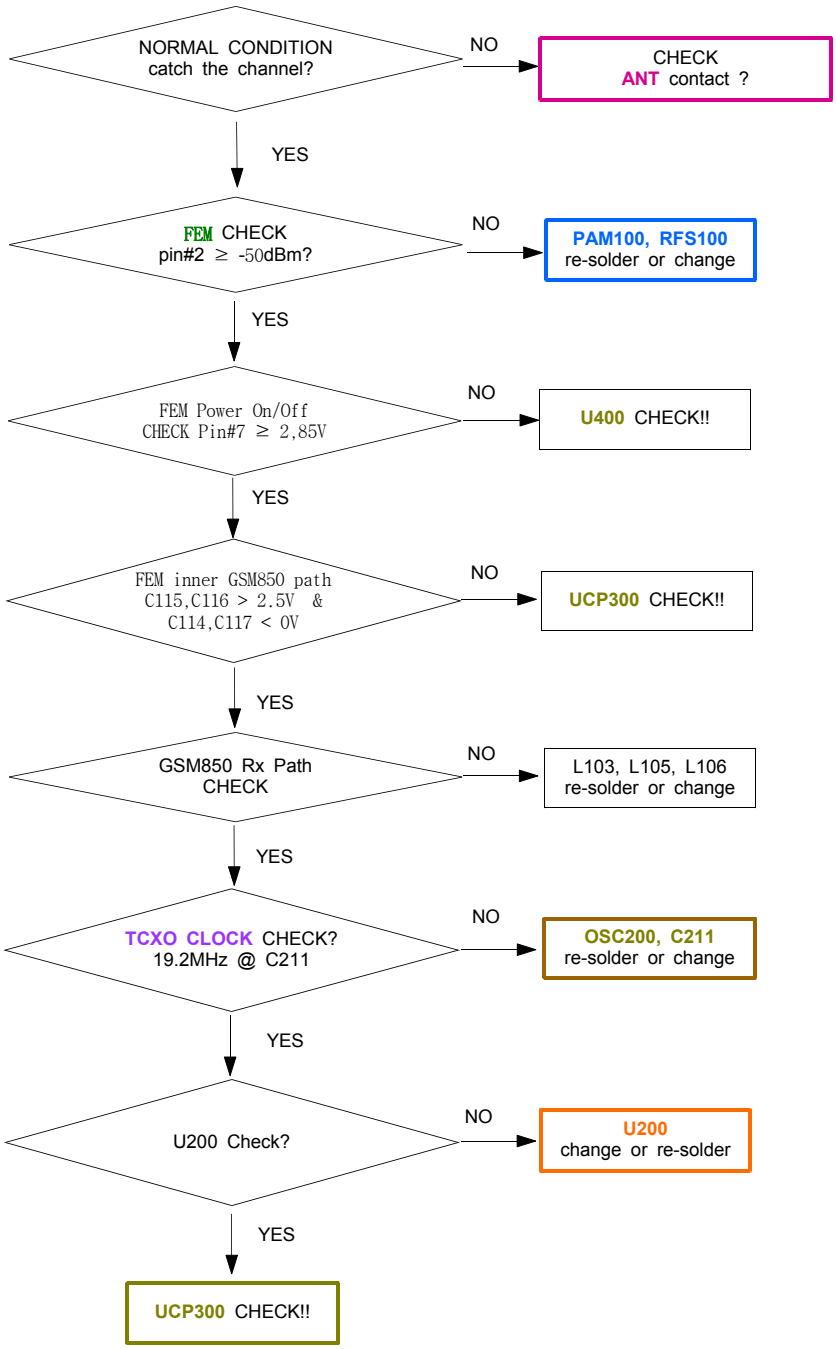

9-2-2. EGSM900 RX

Band : EGSM
CELL POWER : -50dBm
Channel : 62Ch

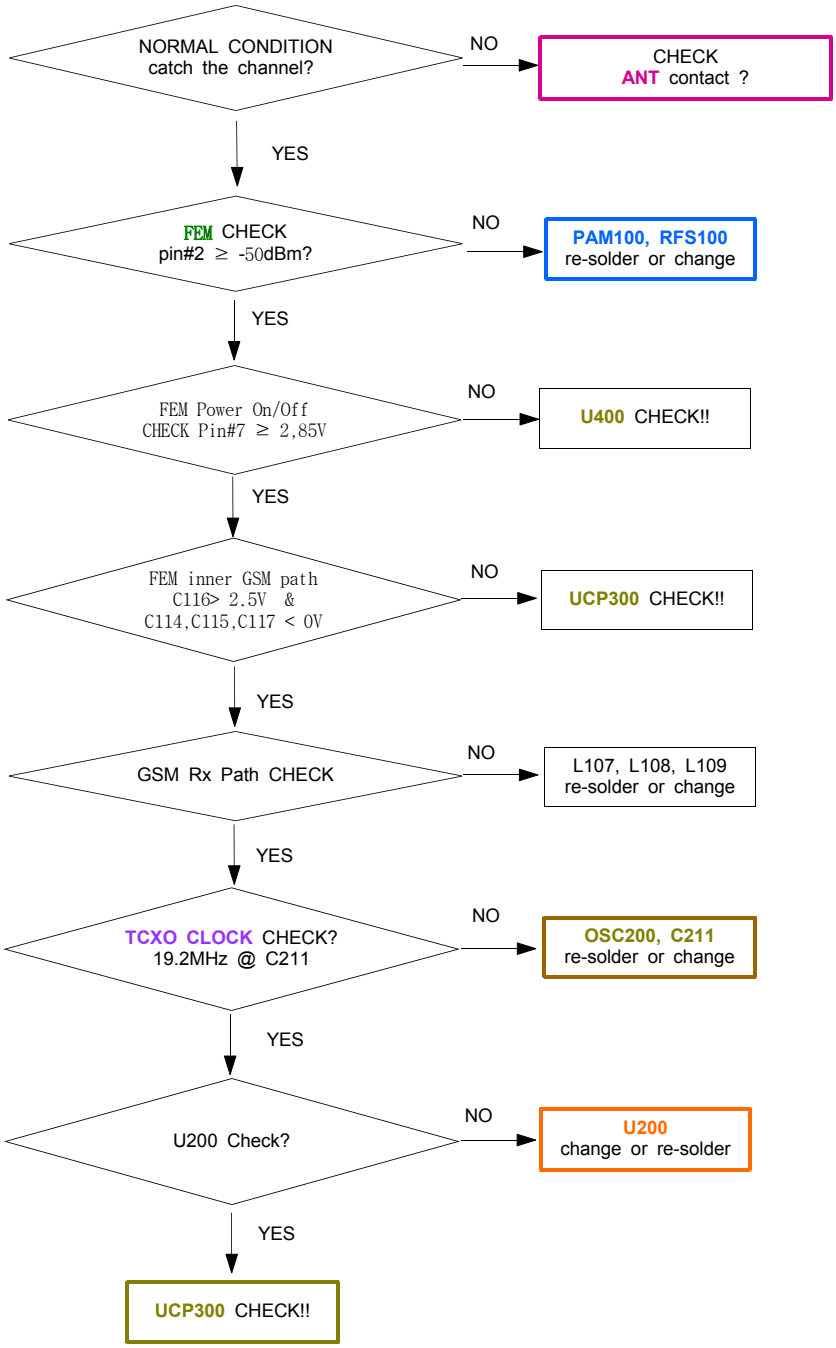

9-2-3. DCS1800 RX

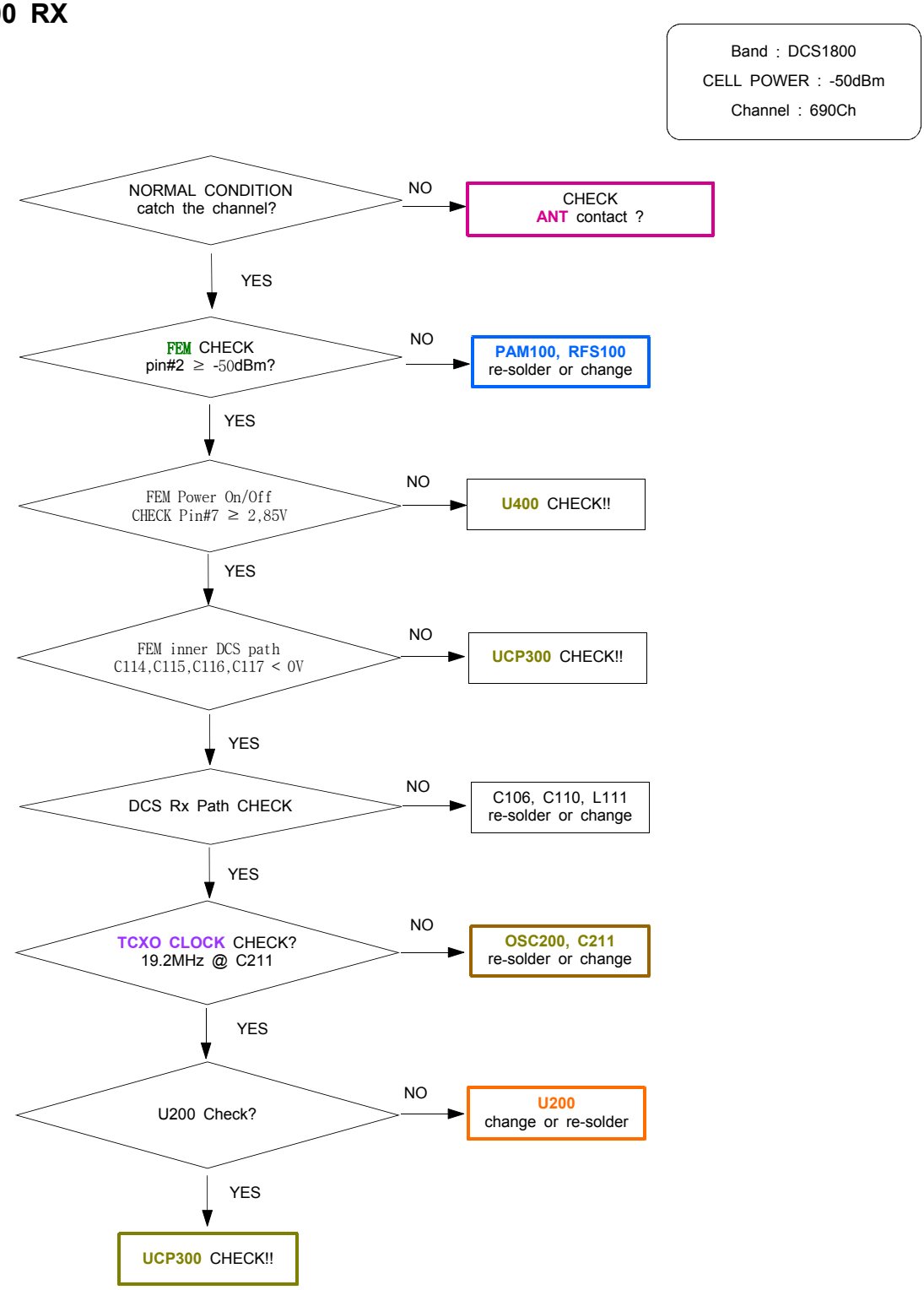

9-2-4. PCS1900 RX

Band : PCS1900
CELL POWER : -50dBm
Channel : 660Ch

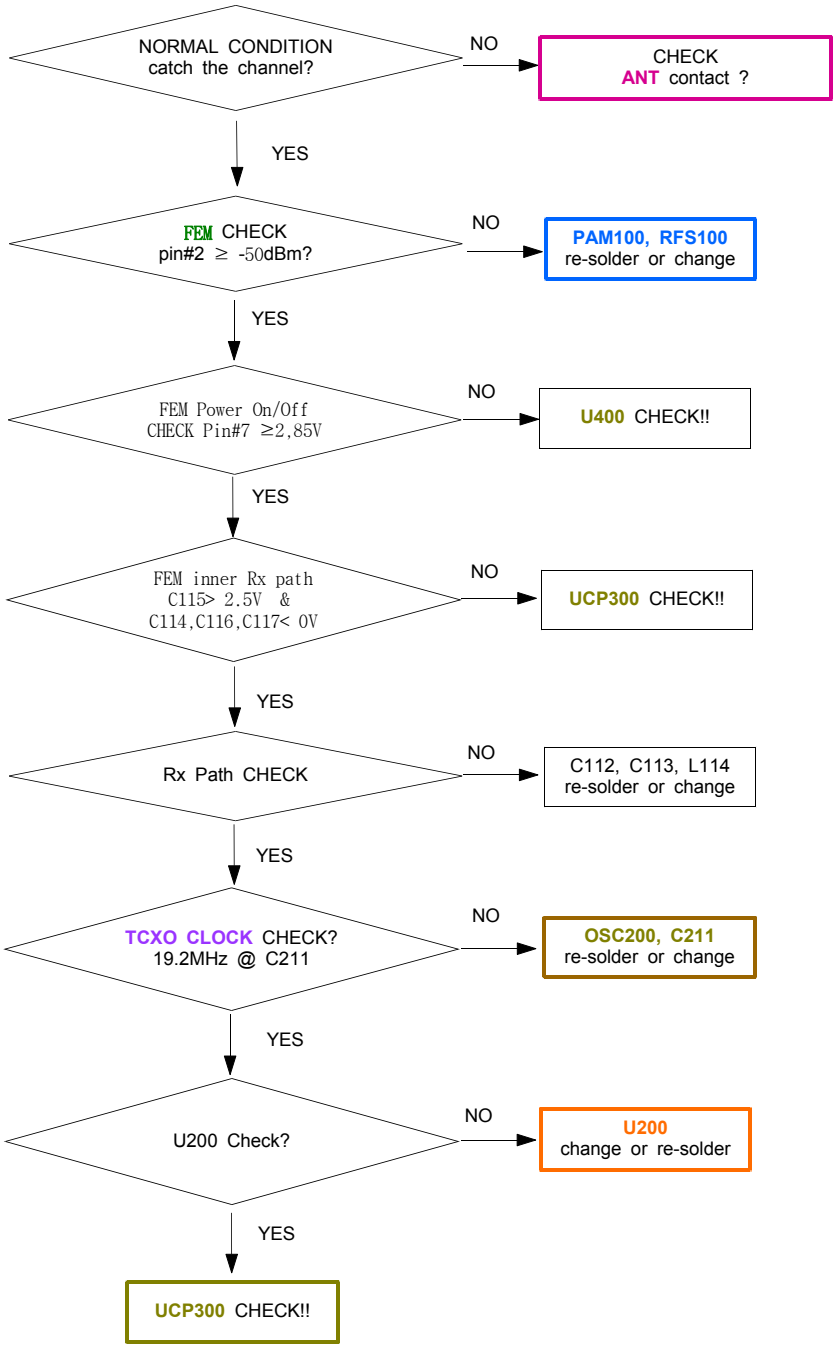

9-2-5. WCDMA900 RX

Band : WCDMA900
CELL POWER : -50dBm
Channel : 3013Ch

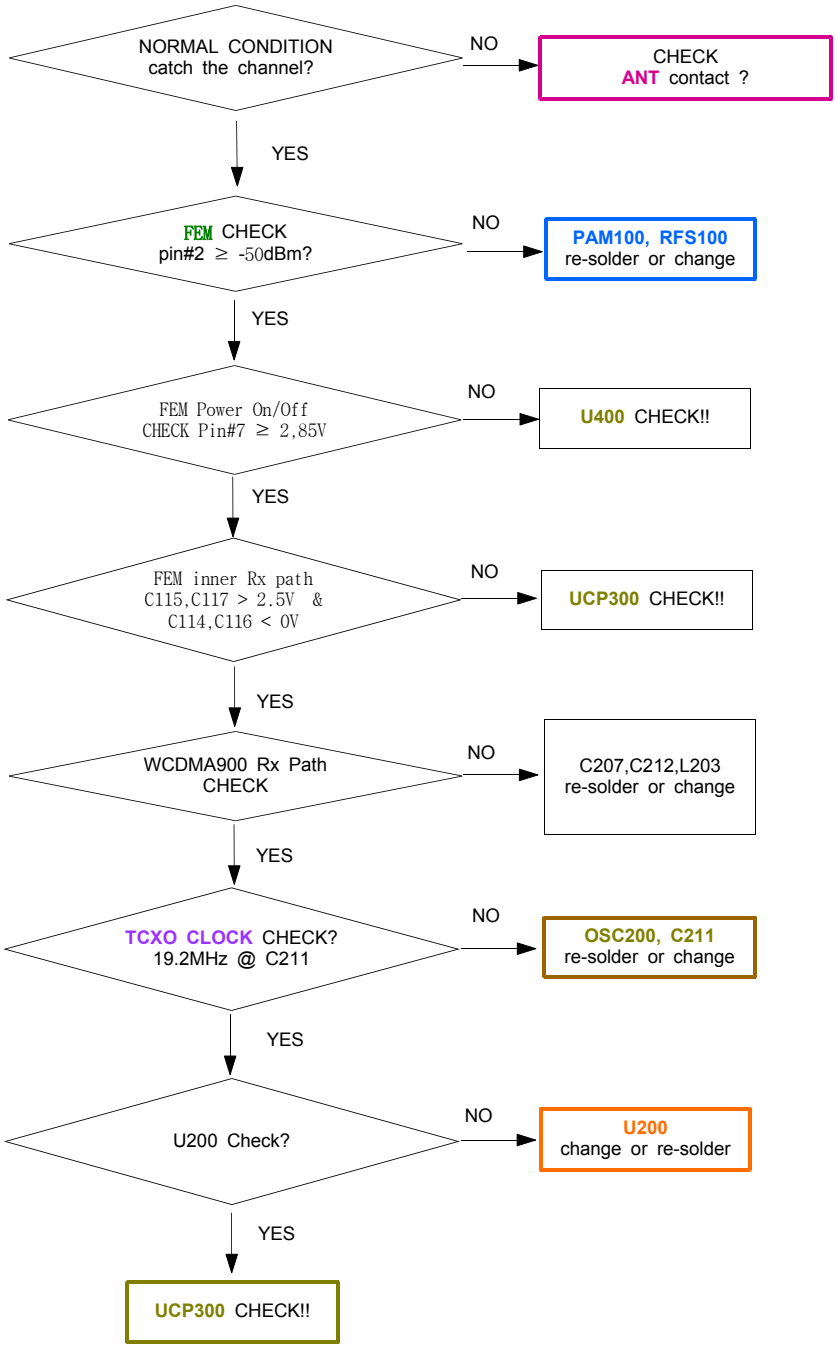

9-2-6. WCDMA1700 RX

Band : WCDMA1700
CELL POWER : -50dBm
Channel : 1638Ch

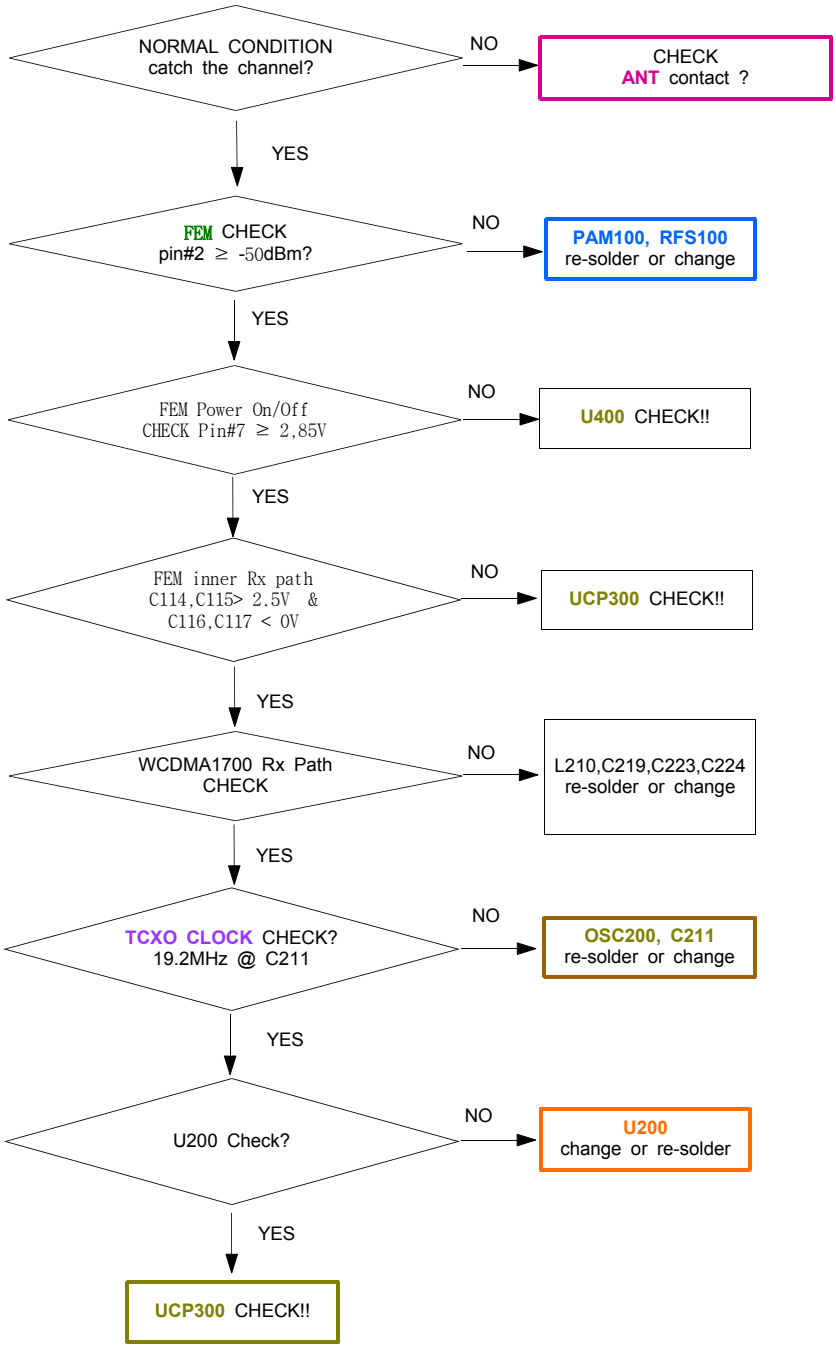

9-2-7. WCDMA2100 RX

Band : WCDMA2100
CELL POWER : -50dBm
Channel : 10700Ch

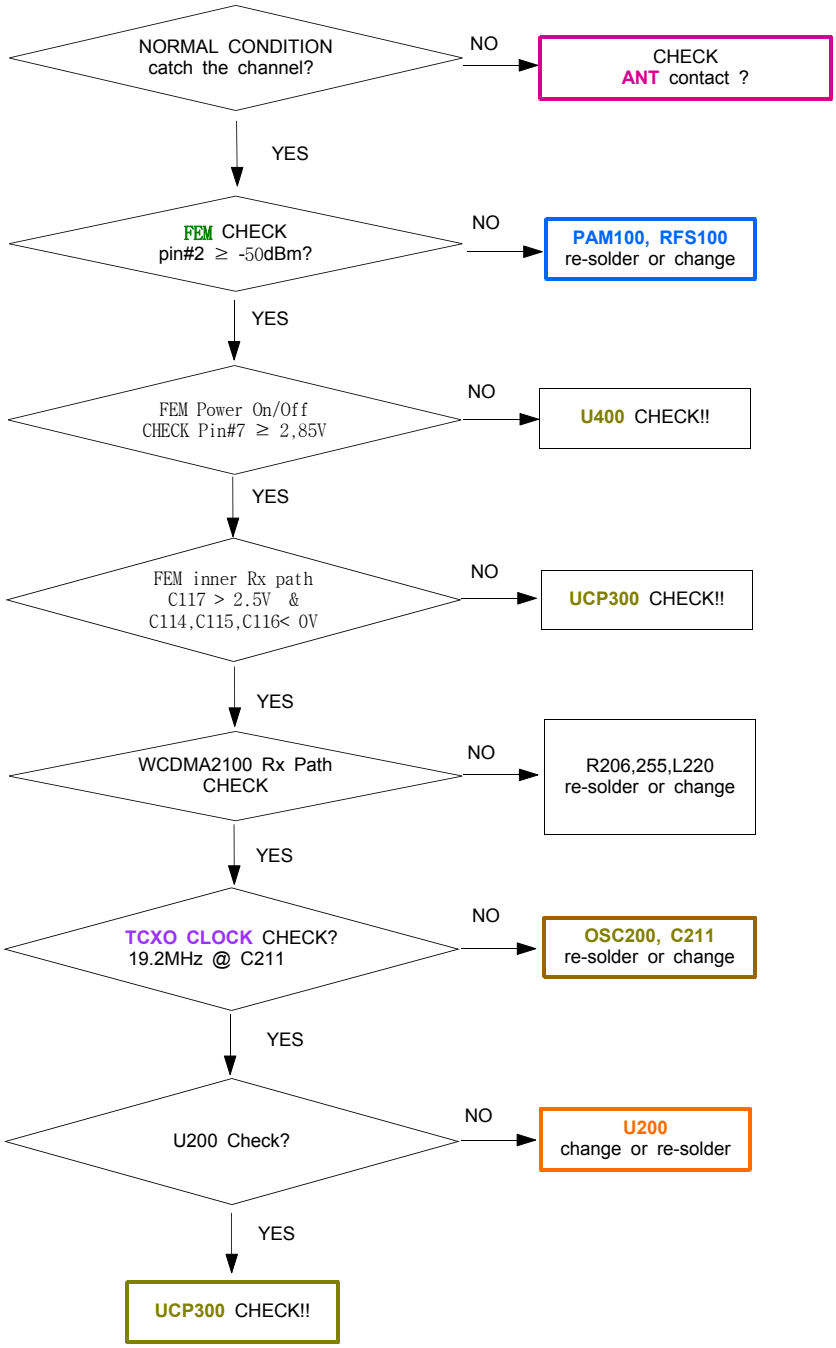

9-2-7. EGSM 850/900 TX

Band :GSM850/900
CELL POWER : -50dBm
Tx Power : 5 Level
Channel : 160/62ch

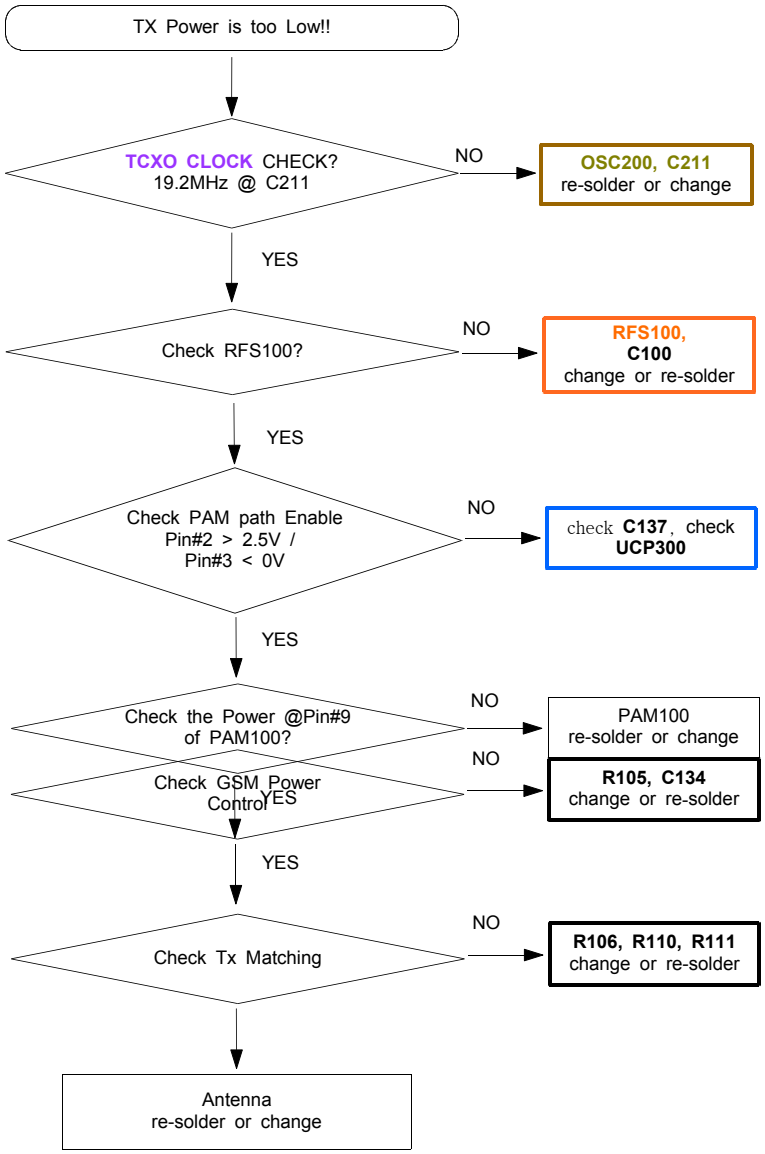

9-2-8. DCS1800 / PCS1900 TX

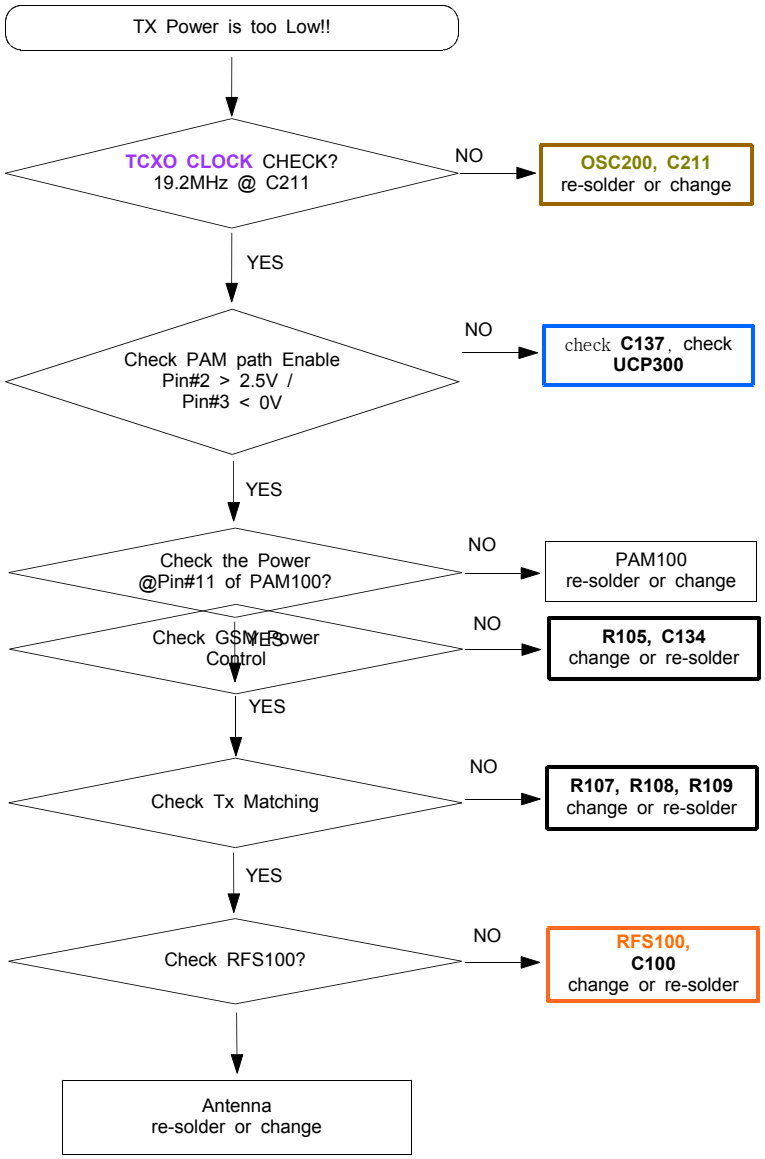

9-2-9. WCDMA900 TX

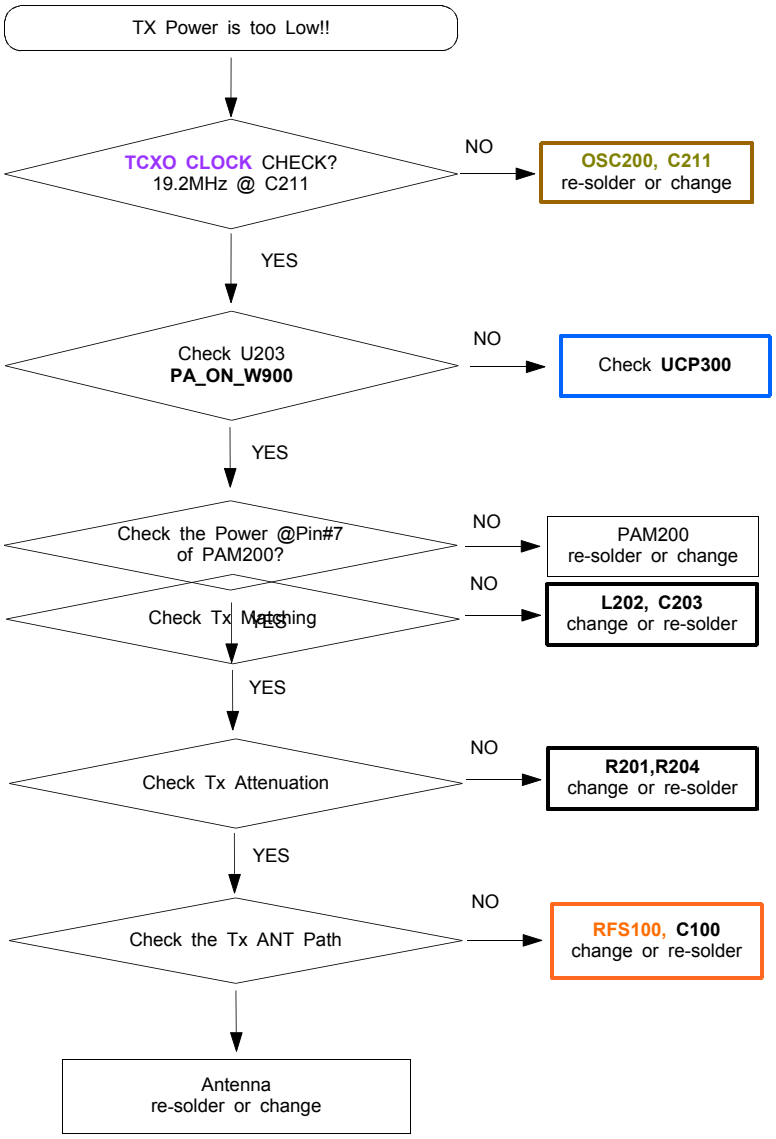

9-2-10. WCDMA1700 TX

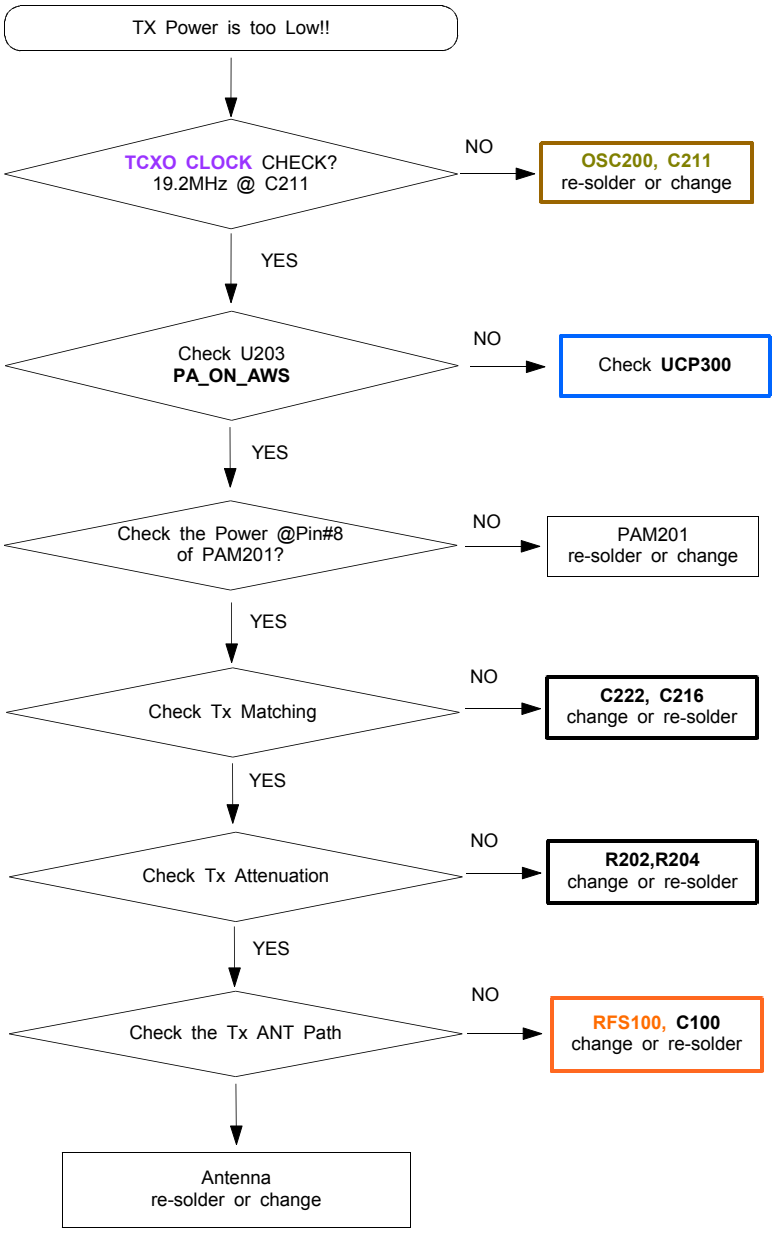

9-2-11. WCDMA2100 TX

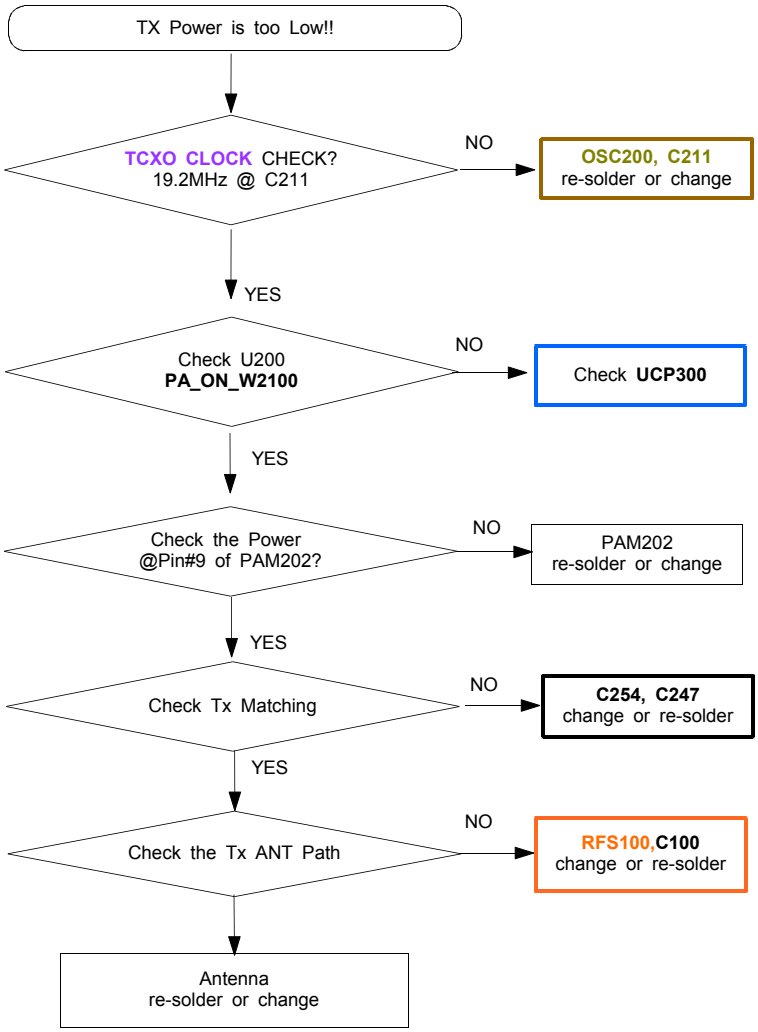

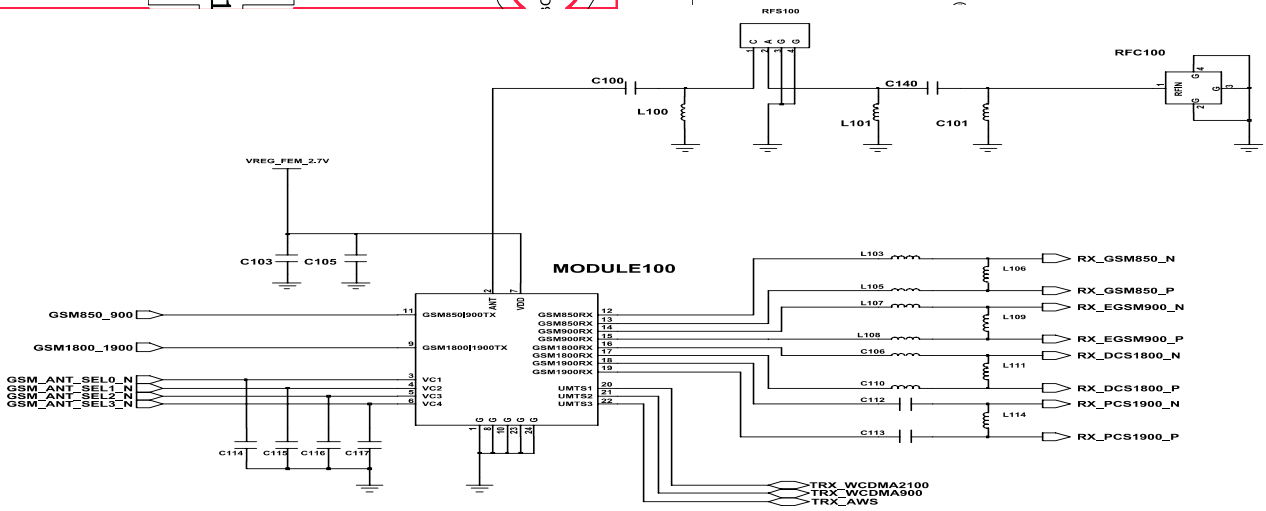

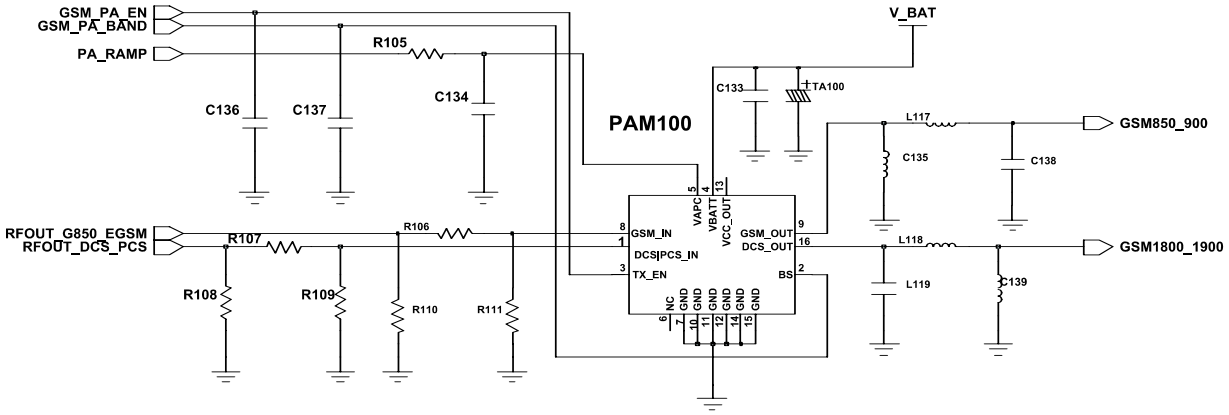

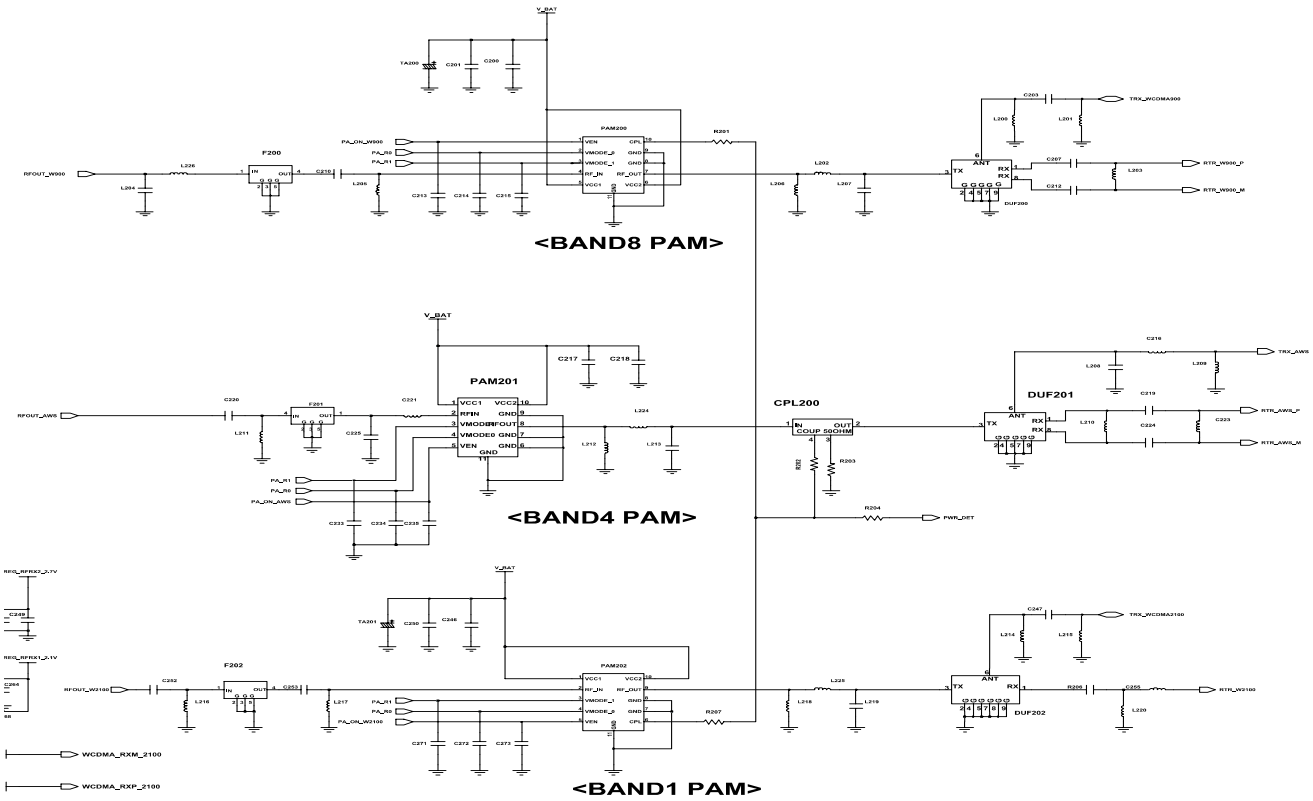

<RTR6285>

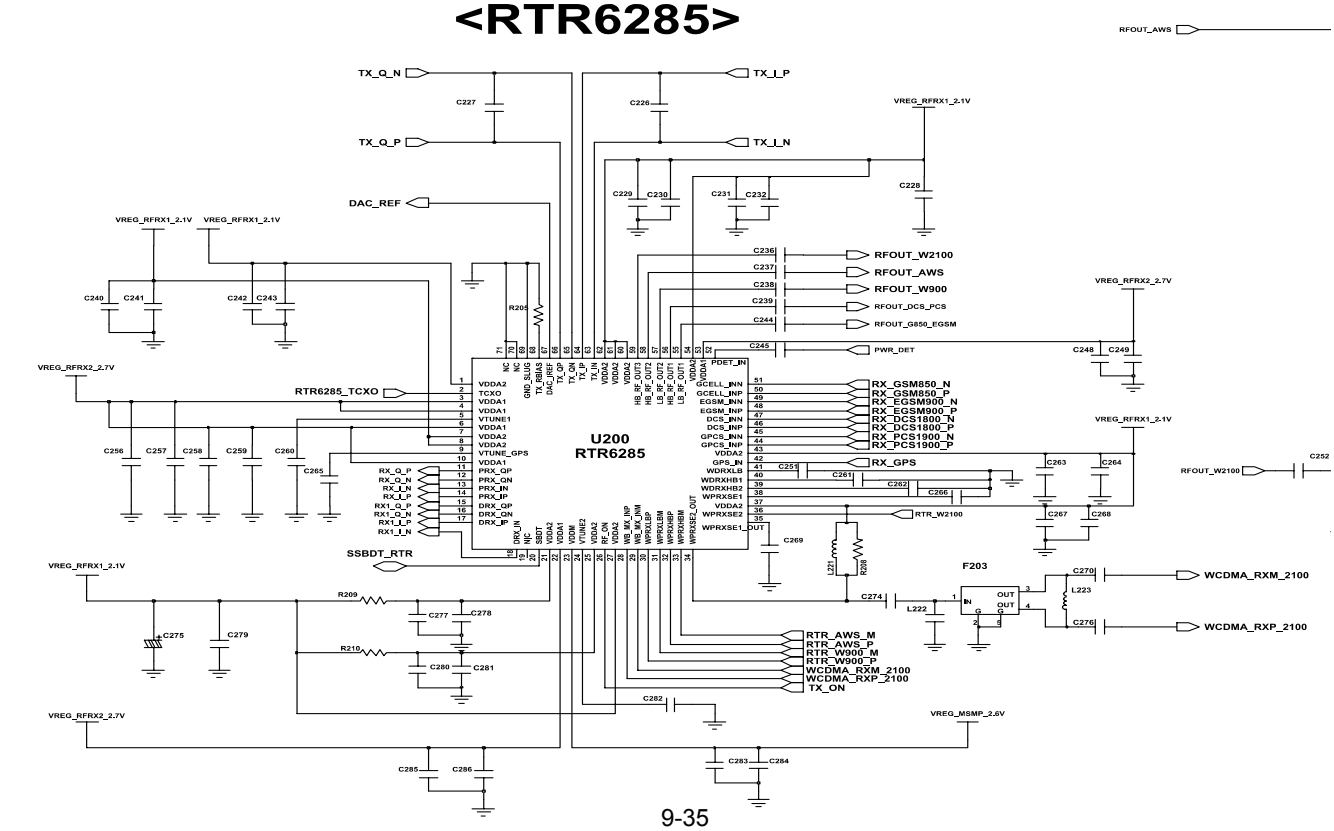

9-2-12. Bluetooth Part

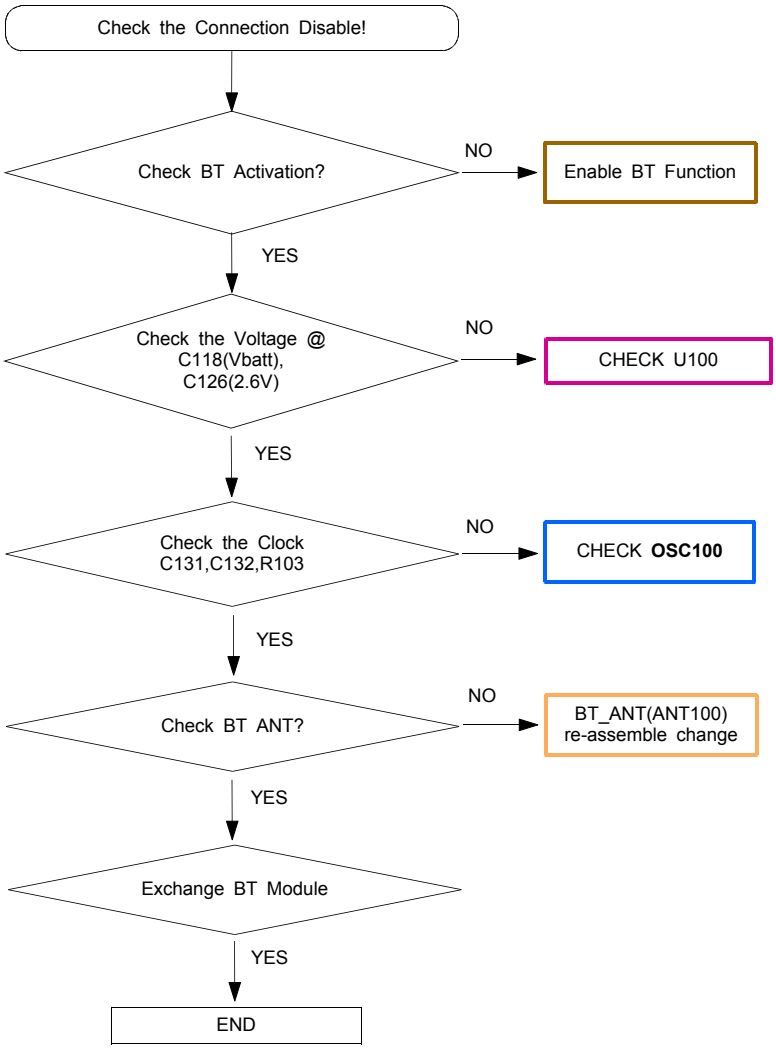

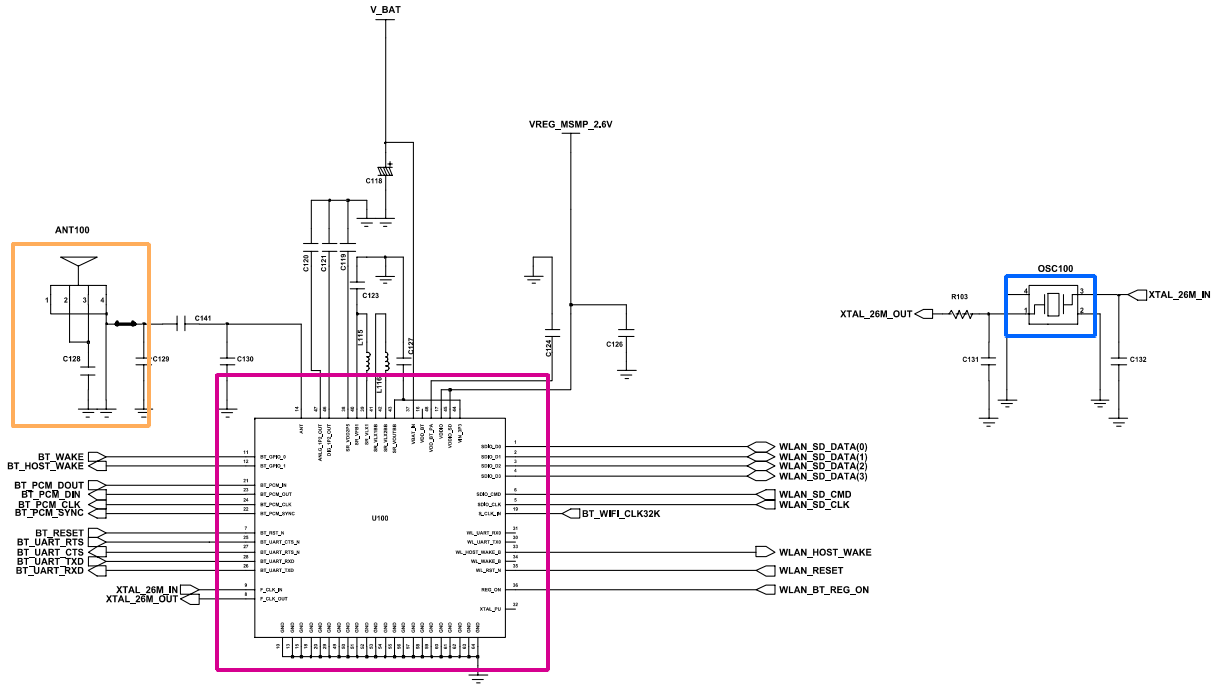

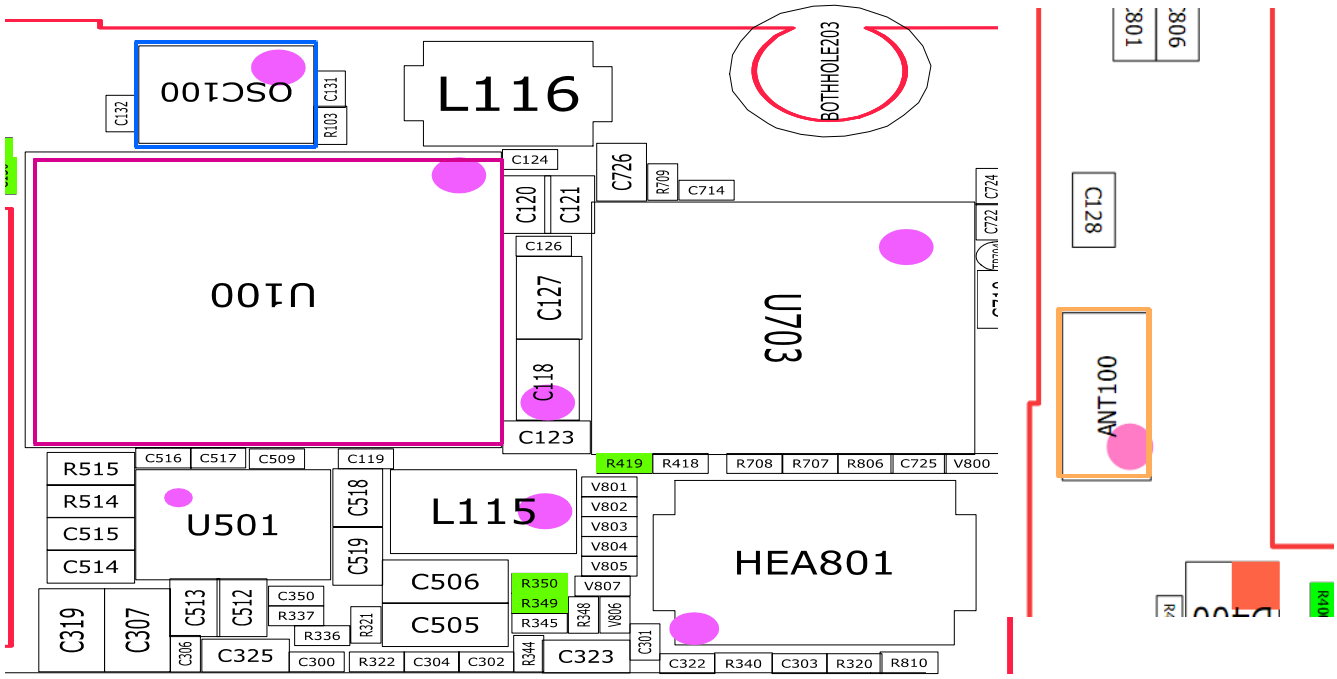

9-2-13. WLAN Part

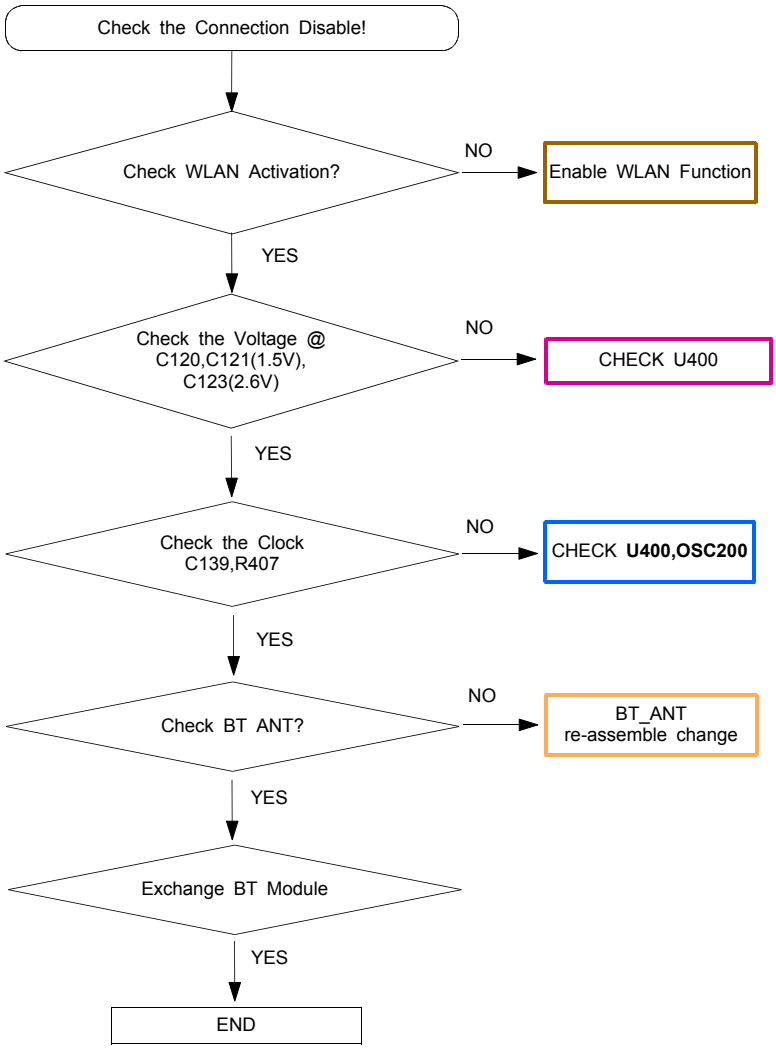

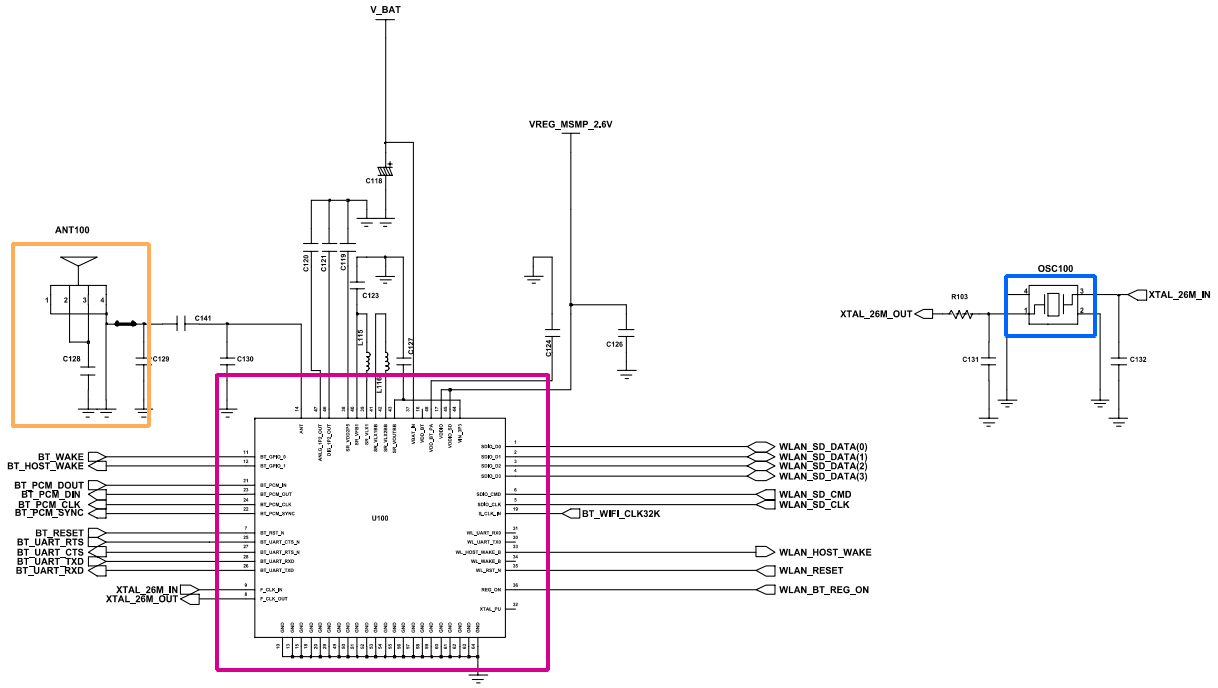

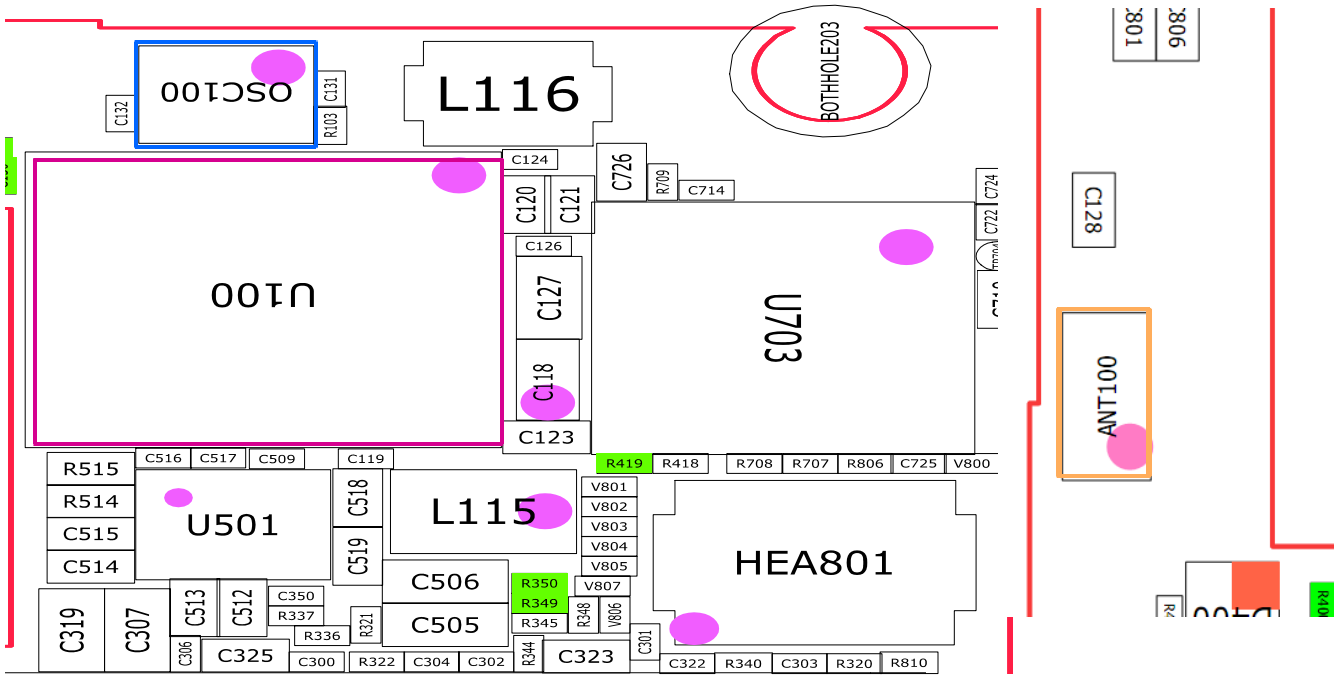

9-2-14. GPS Part

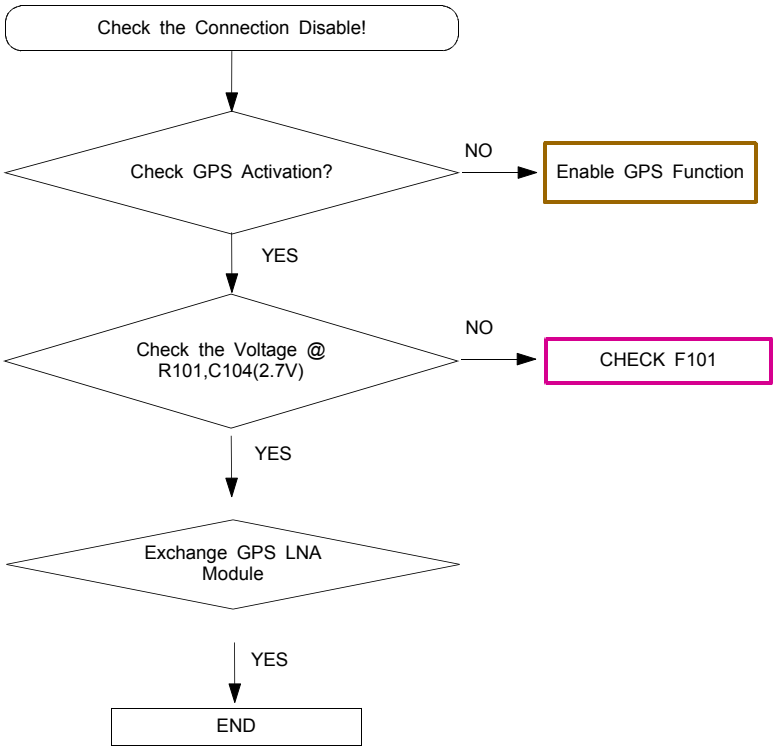

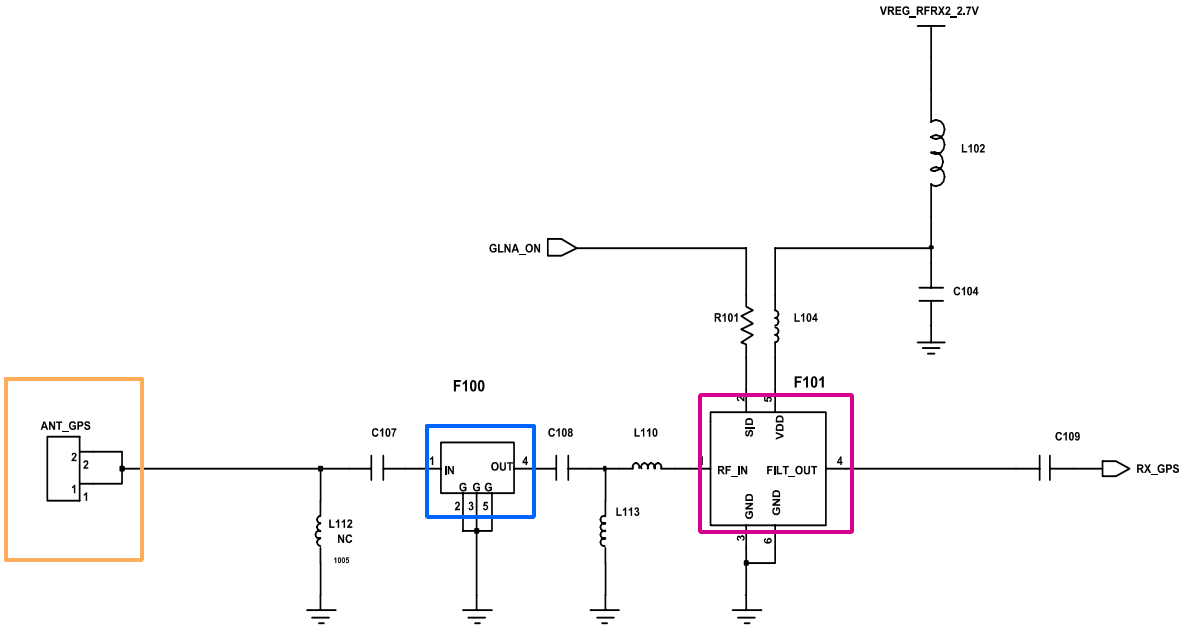

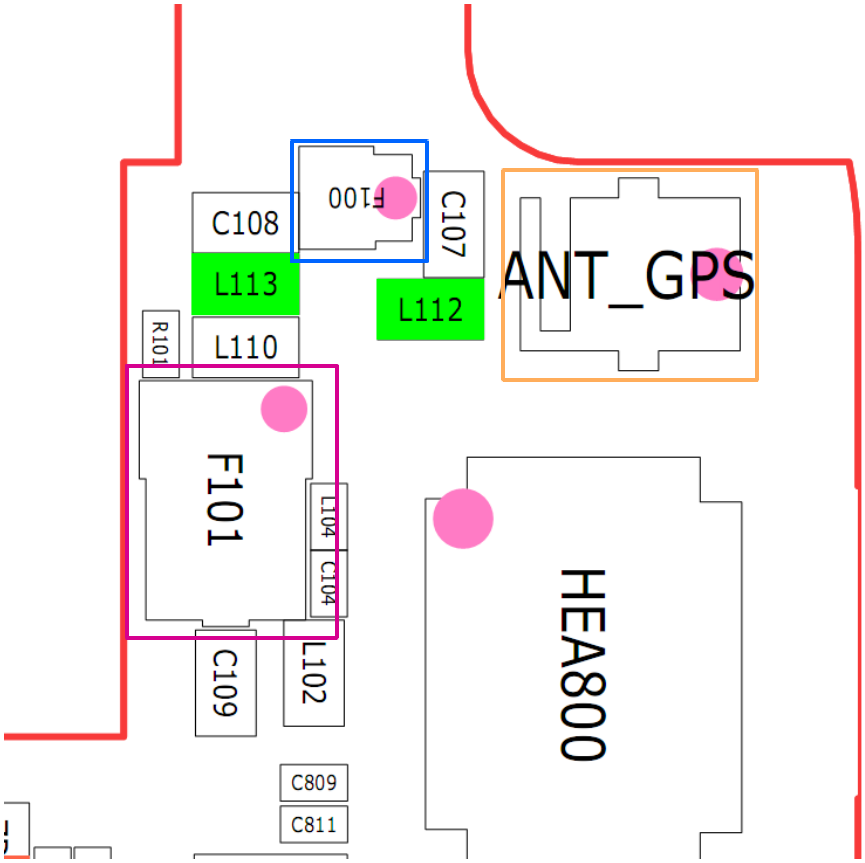

10. Reference data

Reference Abbreviation

- **AAC**: Advanced Audio Coding.
- **AVC** : Advanced Video Coding.
- **BER** : Bit Error Rate
- **BPSK**: Binary Phase Shift Keying
- **CA** : Conditional Access
- **CDM** : Code Division Multiplexing
- **C/I** : Carrier to Interference
- **DMB** : Digital Multimedia Broadcasting
- **EN** : European Standard
- **ES** : Elementary Stream
- **ETSI**: European Telecommunications Standards Institute
- **MPEG**: Moving Picture Experts Group
- **PN** : Pseudo-random Noise
- **PS** : Pilot Symbol
- **QPSK**: Quadrature Phase Shift Keying
- **RS** : Reed-Solomon
- **SI** : Service Information
- **TDM** : Time Division Multiplexing
- **TS** : Transport Stream

11. Disassembly and Assembly Instructions

11-1. Disassembly

1 Remove the 'Rear' by unscrewing those 6 points on the picture. 	2 With the disassembly JIG unhook the rear cover 
1) SCREW Torque: 1.2 ~ 1.4kgf.cm	1) Make sure not to damage the rear and leave scratch on it
3 Disconnect the connector of SUB PBA from the Main PBA and remove the tape 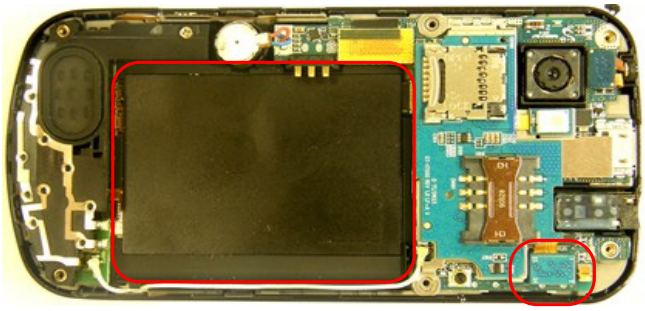	4 Disconnect LCD connector, cable, sensor connector and the motor. 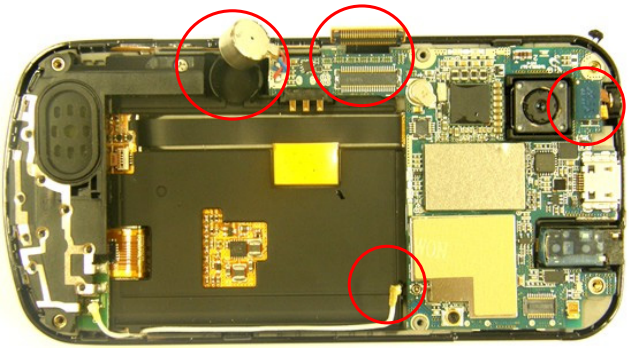
1) Disconnect the connector of SUB PBA from the Main PBA and remove the tape	1) Make sure not to damage the connectors and FPCBs.

5 Disconnect the Key connector at the back of the PBA 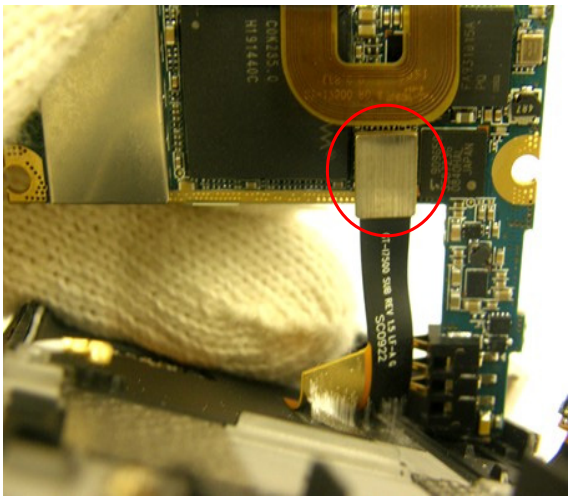	6 Unscrew the screw and disconnect the FPCB then remove the intenna 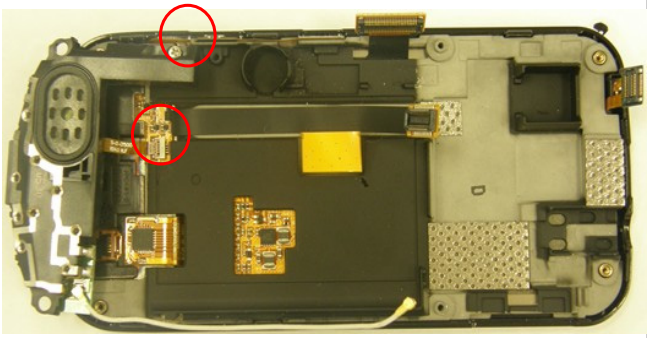
1) Make sure not to damage the connector and the FPCB.	1) SCREW Torque: 1.2 ~ 1.4kgf.cm
7 Open the locker to remove the FPCB. 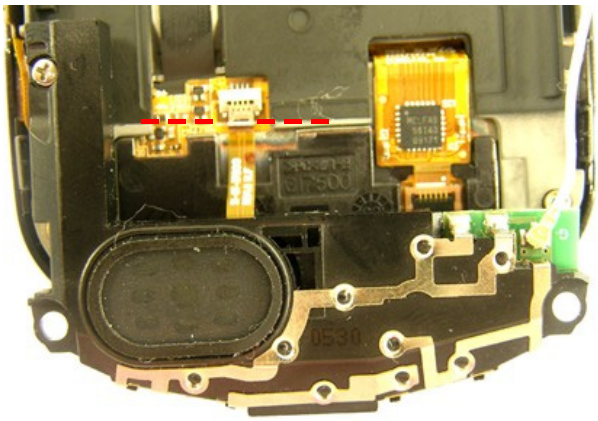	8 Remove the rubber cap. 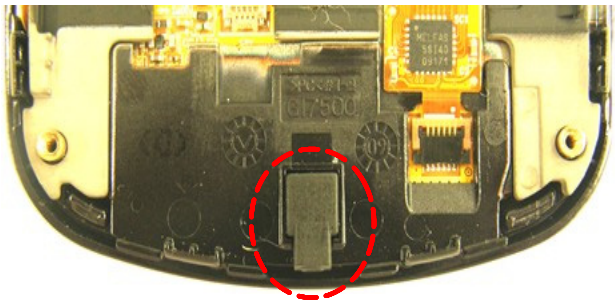
1) Make sure not to damagme the FPCB during the process.	1) Make sure not to damage the FPCB when disassemble the Sidekey FPCB

9 Detach the side key FPCB and lift the sensor connector to remove the bracket from the 'front' 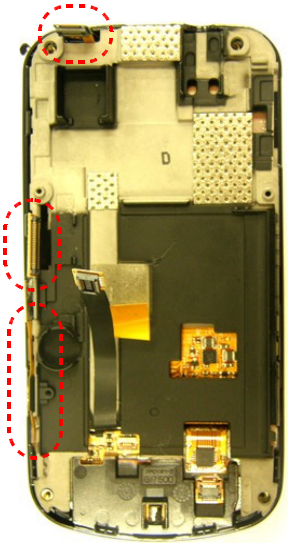	10 Push the sensor from the behind to detach from the bracket. 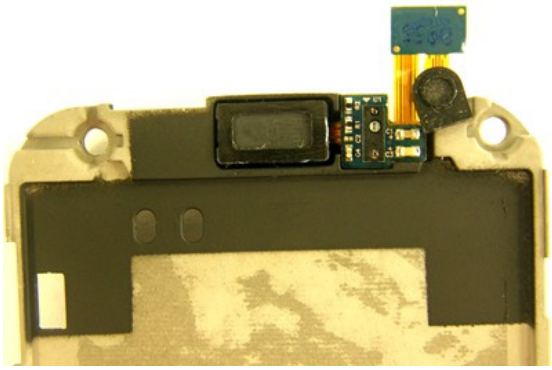
1) Make sure not to damage the LCD connector.	1) Make sure not to damage sensor FPCB.
11 1) Lift the upper side of the LCD with those two points on the picture to remove it from the 'front' 2) Open the locker to remove TSP FPCB  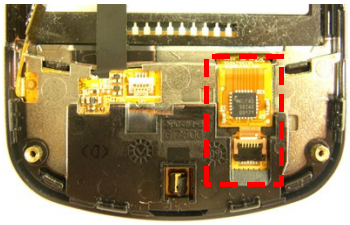	12 1) Leave the TSP ass'y in the high temperature chamber(70℃, 10min) then remove the TSP from the 'front' - TSP disassembly procedure. Top → left & right side → Bottom 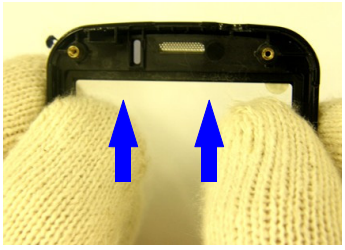 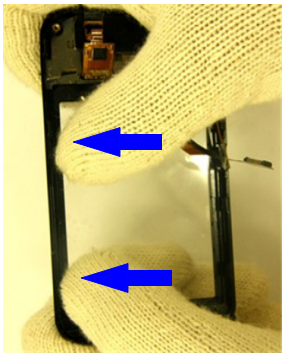
1) Make sure not to damage the LCD	1) Make sure not to damage the TSP

13 Remove the key pad by unhooking those 4 points on the picture. 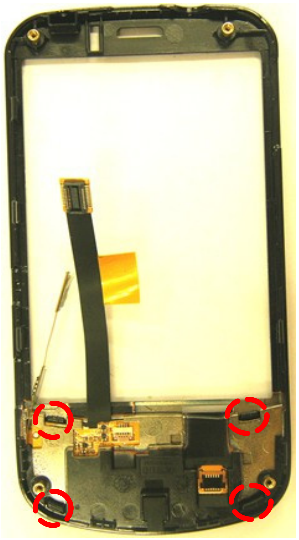	14 Remove the KEY FPCB by lifting the bottom with the tweezers 
1) Make sure not to damage the keypad	1) Make sure not to damage the Key FPCB
15 Disconnect the Camera module from the PBA 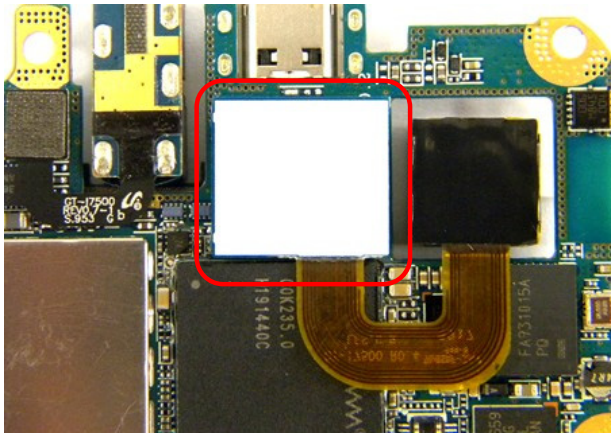	16 Iron the solder to remove the motor. (Lead Free : 350~380℃) 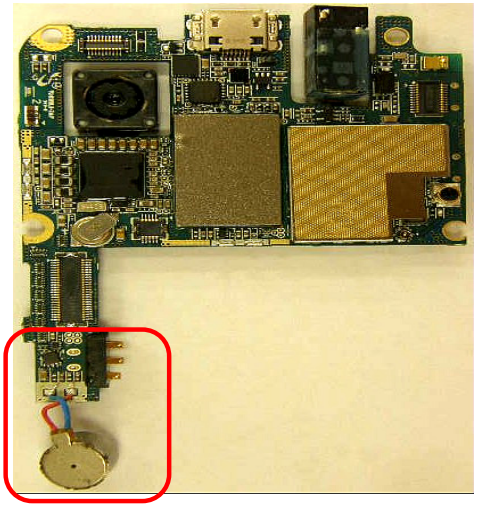
1) Make sure not to damage Camera FPCB	1) Make sure not to damage the components around the motor.

17 Disconnect the ear-jack conncetor.	18 Remove those two shield cans on the picture.
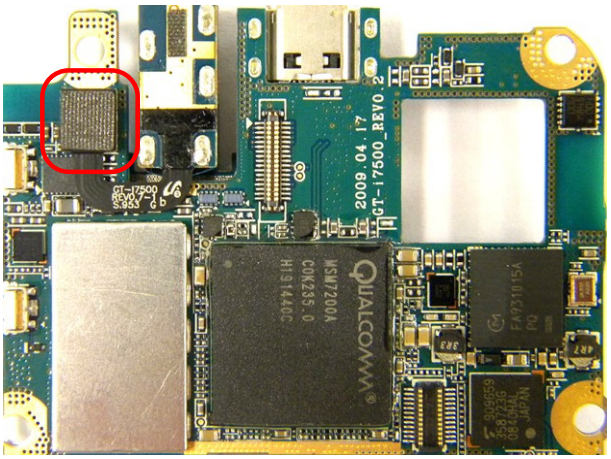	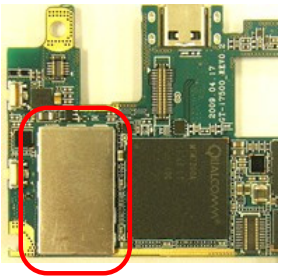 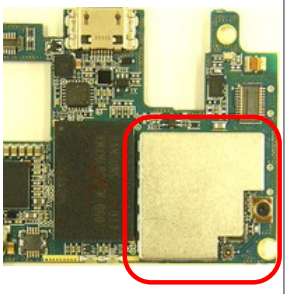
1) Make sure not to damage the ear-jack FPCB	1) Make sure not to damage those shield cans and the components.

11-2. Assembly

1 Assemble two shield cans on the picture on the PBA 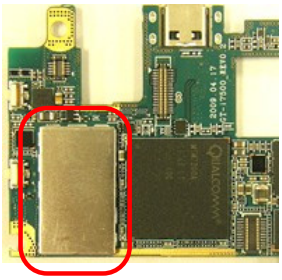 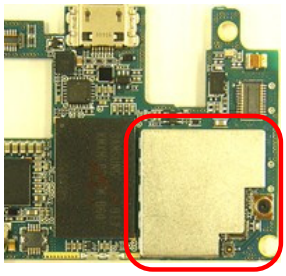	2 Connect the Ear-jack connector 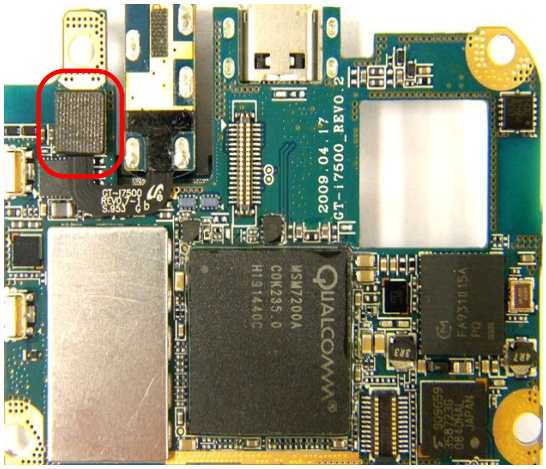
1) Make sure not to make any damage on the shield cans.	1) Make sure not to damage FPCB
3 By using iron, solder in motor on the PBA (Lead Free : 350~380℃) 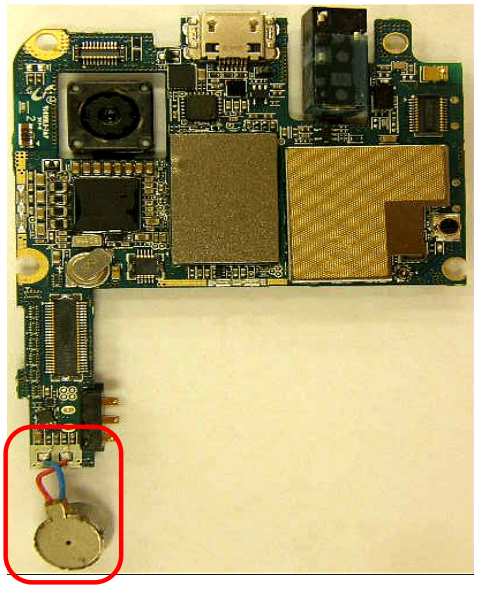	4 Remove the release paper on the FPCB and connect to the PBA 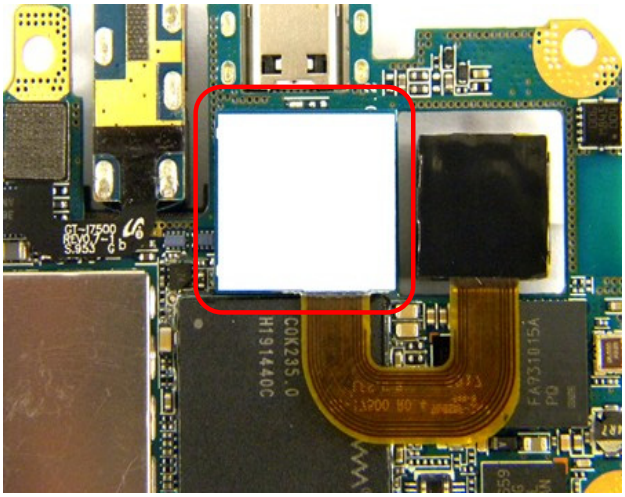
1) Make sure not to damage any components around the area.	1) Make sure not to damage the FPCB.

5 Attach the absorber on the memory. 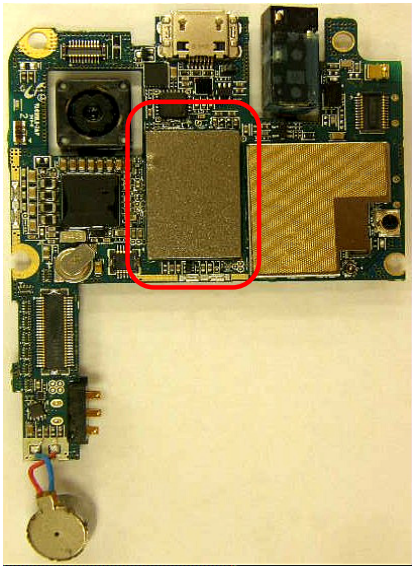	6 Remove the KEYFPCB release paper then attach from the bottom. 
1) Make sure the absorber is fit inside the border.	1) Make sure not to damage FPCB
7 Assemble keypad by placing 4hooks at the 4 points on the picture 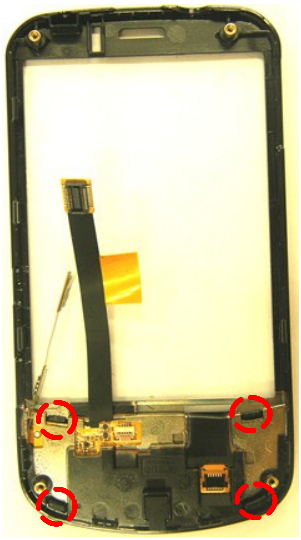	8 Remove the window release paper and insert FPCB through the groove. Insert it into the connector until the silk reach the margin and lock. Press the window after it is attached. 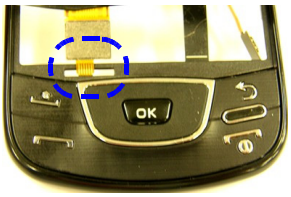 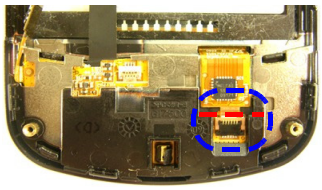
1) Make sure not to damage the keypad	1) Make sure not to damage the FPCB while working on it.

9 Remove the release paper and attach the LCD to the 'front' from the bottom where 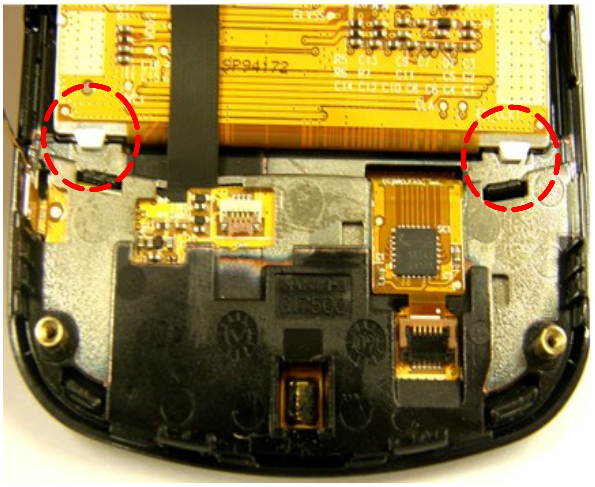	10 Removetthe sensor FPCB release paper and insert the receiver inside the platform on the LCD bracket. Then attach the sensor 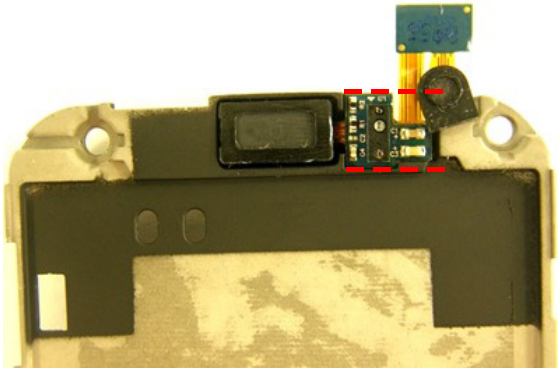
1) Make sure not to damage LCD.	1) Make sure not to damage the sensor FPCB and prevent it from sticking out
11 Drivers 4 screws on the rear (torque:1.0~1.2) 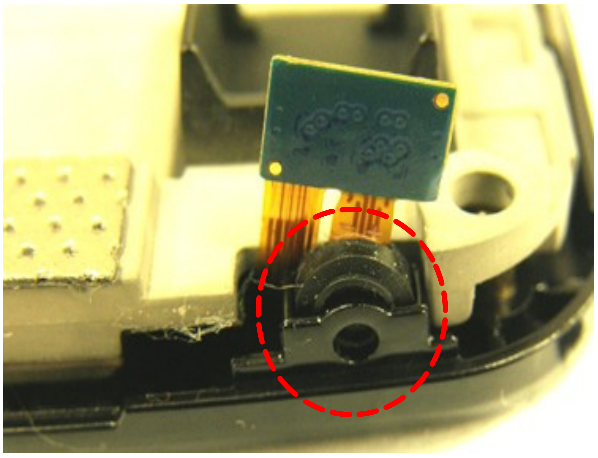	12 Insert the LCD connector through the groove and assemble the bracket with the 'front'. 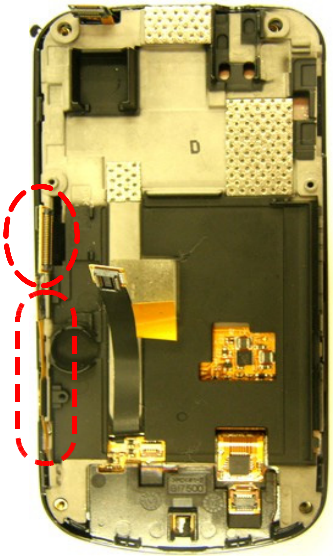
1) Make sure MIC rubber does not come off and get damaged.	1) Make sure not to damage the side-key FPCB during assembly.

13 Cover the MIC with the MIC rubber 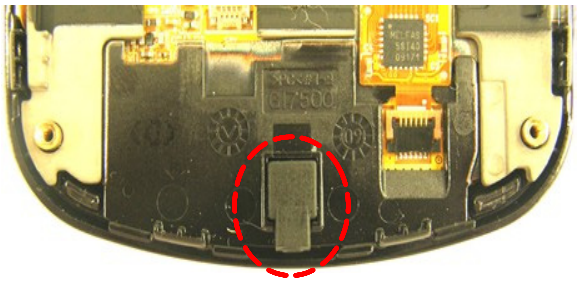	14 Insert the speaker FPCB until its silk reach the margin. 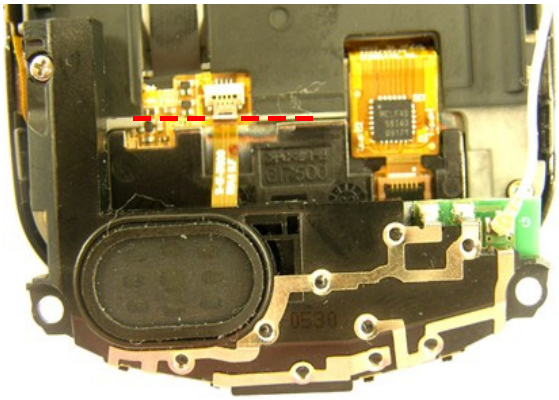
1) Make sure it does get loose.	1) Make sure not to damage the FPCB while inserting it.
15 1) Screw it after the antenna is assembled. 2) Connect the cable and place it inside the groove 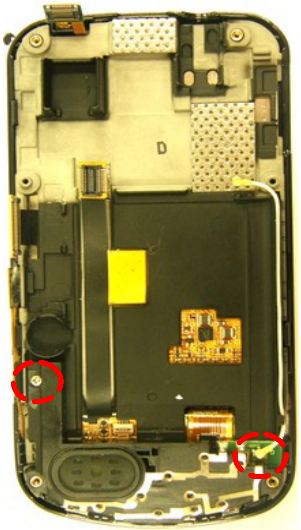	16 Insert the volume key then connect the key connector on the PBA 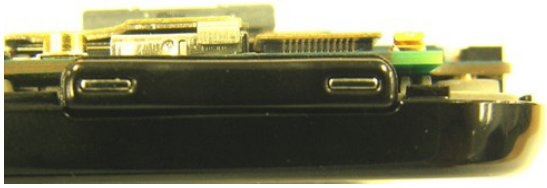 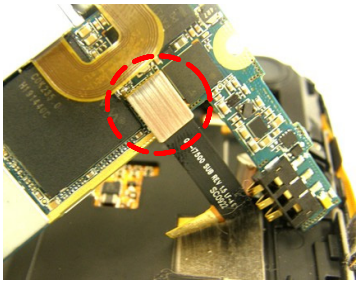
1) SCREW Torque: 1.2 ~ 1.4kgf.cm 2) Make sure the cable does not stick out.	1) Make sure not to damage key FPCB.

17 1) Connect LCD, sensor, and intenna cable. 2) Remove the motor release paper and attach the motor to the bracket. 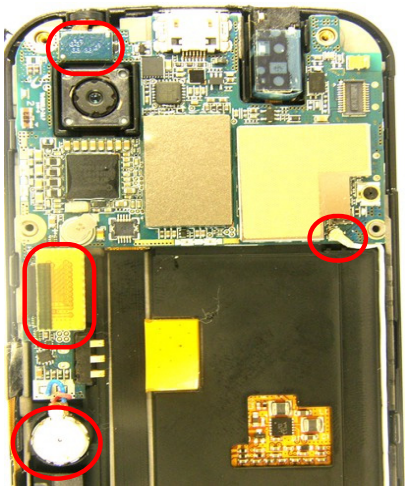	18 1) Remove the SUB PBA release paper then place SUB PBA can with the clip on the PBA 2) Connect the connector of the SUB PBA on the Main PBA 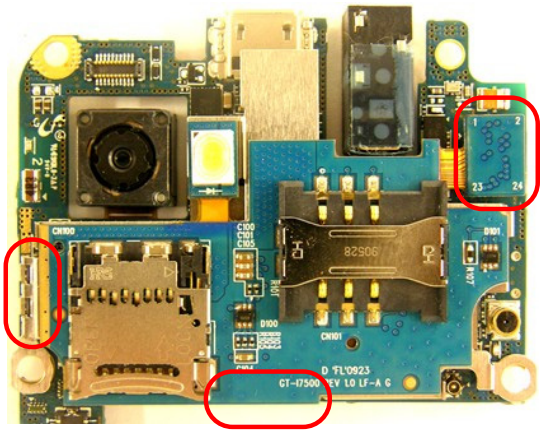
1) Make sure not to damage any of these items.	1) Make sure not to damage the clip during SUB PBA assembly. 2) Also try not to damage the connector FPCB.
19 Attach the tape and make it fit inside the margin then press it until it gets not loose. 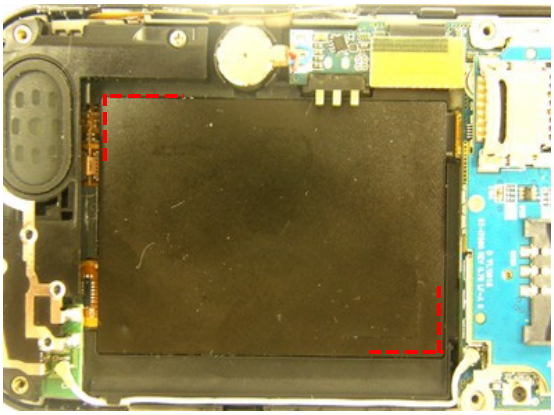	20 Assemble the 'rear' starting from the opposite side of the camera key. 
1) Make the tape fit inside the border.	1) Make sure not to damage the 'Lock' key and the Camera key.

21	Screw 6 points and finish assembly.

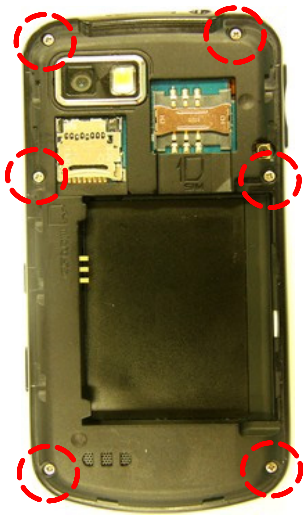

1) SCREW Torque: 1.2 ~ 1.4kgf.cm

12. Schematic Diagram

- NC Point : TOP VIEW

[UCP300]

	1	2	3	4	5	6	7	8	9	10	11	12	13	14	15	16	17	18	19	20	21	22	23	24	25	26	27	28
A	○	○	○	○	●	○	○	○	○	○	○	○	○	○	○	○	○	○	○	○	○	○	●	○	○	●	○	○
B	○	○	○	○	●	○	○	○	○	○	○	○	○	○	○	○	○	○	○	○	○	○	○	○	○	●	●	○
C	●	○																									○	○
D	●	●		○	○	○	●	○	○	○	○	○	○	●	○	○	●	○	○	○	●	●	●	●	○		○	○
E	●	●		○	○	○	●	○	○	○	○	○	○	○	○	○	○	○	○	●	●	●	○	○	●		○	○
F	○	○		○	○																			●	○		○	○
G	○	○		○	○		○	○	○	○	○	○	○	○	○	○	○	○	○	○	●	○		○	○		○	○
H	○	○		○	○		○	○	○	○	○	○	○	○	○	○	○	○	●	●	○	○		○	○		○	○
J	○	○		○	○		○	○													●	○		○	○		○	○
K	○	○		○	○		○	○													○	○		○	○		○	○
L	○	○		○	○		○	○				○	○	○	●	○	○	○			○	●		○	○		○	○
M	○	○		○	○		○	○			○	○	○	○	○	○	○	○			○	○		○	○		○	○
N	○	○		○	○		○	○			○	○	○	○	○	○	○	○			●	○		●	●		○	○
P	○	○		○	○		○	○			○	○	○	○	○	○	●	○			●	○		●	●		○	○
R	○	○		○	●		○	○			○	○	○	○	○	○	○	○			●	○		○	○		○	○
T	○	○		○	●		●	●			●	○	○	○	○	○	○	●			●	●		●	●		●	●
U	○	○		○	●		●	●			○	○	○	○	○	○	●	○			●	●		●	●		○	○
V	○	○		○	○		○	○			○	○	○	○	○	○	○	○			●	●		●	●		○	○
W	○	○		○	○		○	○													●	●		●	●		○	○
Y	○	○		○	○		○	○													●	○		●	○		○	○
AA	○	○		○	○		○	○	○	○	○	○	●	○	●	●	○	○	○	○	○	○		○	○		○	○
AB	○	○		○	○		○	○	○	○	○	○	○	○	●	●	○	○	○	○	○	○		○	○		○	○
AC	○	○		○	○																			○	○		●	●
AD	○	○		○	○	○	○	○	○	○	○	○	○	○	○	○	○	○	○	○	○	○	○	●	○		○	○
AE	○	○		○	○	○	○	○	○	○	○	○	○	○	○	○	○	○	○	○	○	○	○	○	○		○	○
AF	○	●																									○	○
AG	○	○	○	○	○	○	○	○	○	○	○	○	○	●	●	●	○	○	○	○	○	○	○	○	○	○	○	○
AH	○	○	○	○	○	○	○	○	○	○	○	○	○	●	●	●	○	○	○	○	○	○	○	○	○	○	○	○

● : NC Point

[UME300]

	1	2	3	4	5	6	7	8	9	10	11	12	13	14	15	16
A		DNU	DNU											DNU	DNU	DNU
B	DNU	VSSm	VDDFm	VSSn	VCCn	VSSn	VCCn	VSSn	VCCn	VCCn	VSSn	VSSn	VCCn	DQ31d	VSSd	DNU
C	DNU	DAT0m	DAT1m	NC	IO6n	IO5n	NC	NC	NC	NC	NC	NC	DQ30d	DQ29d	VDDd	DNU
D		DAT3m	DAT2m	IO7n	NC	NC	R/$\overline{B}$n	IO4n	IO3n	IO2n	IO1n	IO0n	DQ28d	DQ27d	VDDQd	
E		DAT5n	DAT4n	$\overline{CE}$n	ALEn							DQ26d	DQ25d	DQ24d	VSSQd	
F		DAT7n	DAT6n	NC									DQS3d	DM3d	VDDQd	
G		VSSm	VDDm	$\overline{RE}$n									DQ23d	DQ22d	VSSQd	
H		VSSd	VDDd	NC									DQ21d	DQ20d	VDDQd	
J		A9d	A5d	NC									DQ19d	DQ18d	VSSQd	
K	NC	A4d	A8d	A7d									DQ17d	DQ16d	VDDQd	NC
L	NC	VSSd	A11d	A6d									DQS2d	DM2d	VSSQd	NC
M	NC	VDDd	A12d	BA0d									DM1d	CKd	VDDQd	NC
N	NC	A0d	A10d	BA1d									DQS1d	$\overline{CK}$d	VSSQd	NC
P		A3d	A2d	A1d									DQ15d	DQ14d	VDDQd	
R		NC	NC	CKEd									DQ13d	DQ12d	VSSQd	
T		NC	$\overline{WE}$d	NC									DQ11d	DQ10d	VDDQd	
U		$\overline{CS}$d	$\overline{RAS}$d	$\overline{CAS}$d									DQ9d	DQ8d	VSSQd	
V		VDDd	NC	CLKm	VDDIm							DM0d	DQS0d	DQ7d	VDDQd	
W		VSSd	VDDm	CMDm	NC	$\overline{WP}$n	DNU	CLEn	NC	NC	NC	DQ6d	DQ5d	DQ4d	VSSQd	
Y	DNU	VDDm	VDDFm	VDDFm	NC	$\overline{WE}$n	NC	NC	NC	NC	NC	DQ3d	DQ2d	DQ1d	VSSd	DNU
AA	DNU	VSSm	VSSm	VSSm	NC	NC	NC	VCCn	VSSn	VCCn	VSSn	VSSQd	VDDQd	DQ0d	VDDd	DNU
AB	DNU	DNU	DNU											DNU	DNU	DNU

moviNAND

NAND Flash

M-DDR

NC

199FBGA: Top View (Ball Down)

VDDFm : Power for Flash

VDDm : Power for Controller

: NC Point

Service schematics

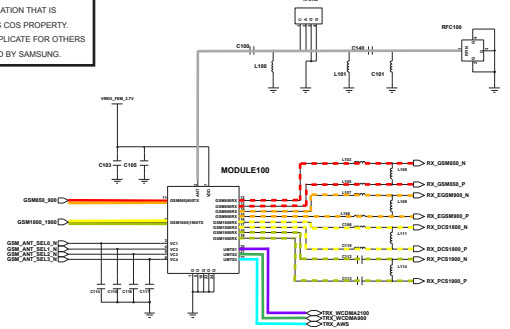

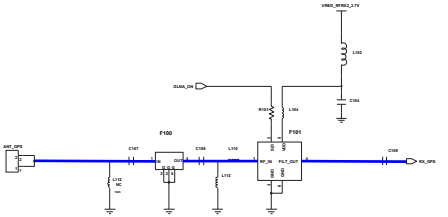

GPS_RX(RTR)

*RF part
ANT
GSM850 TX
GSM900 TX
DCS/PCS TX
UMTS900 TX
UMTS2100 TX
UMTS1700 TX
GSM850 RX
GSM900 RX
DCS RX
PCS RX
UMTS900 RX
UMTS1700 RX
UMTS2100 RX
Bluetooth
WIFI
TCXO
GPS

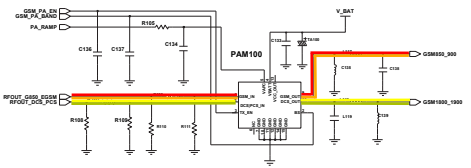

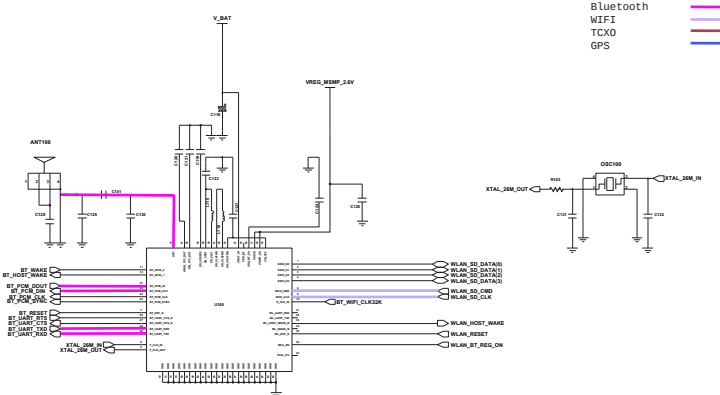

BT WIFI

<GSM PAM+FEM>

Service schematics

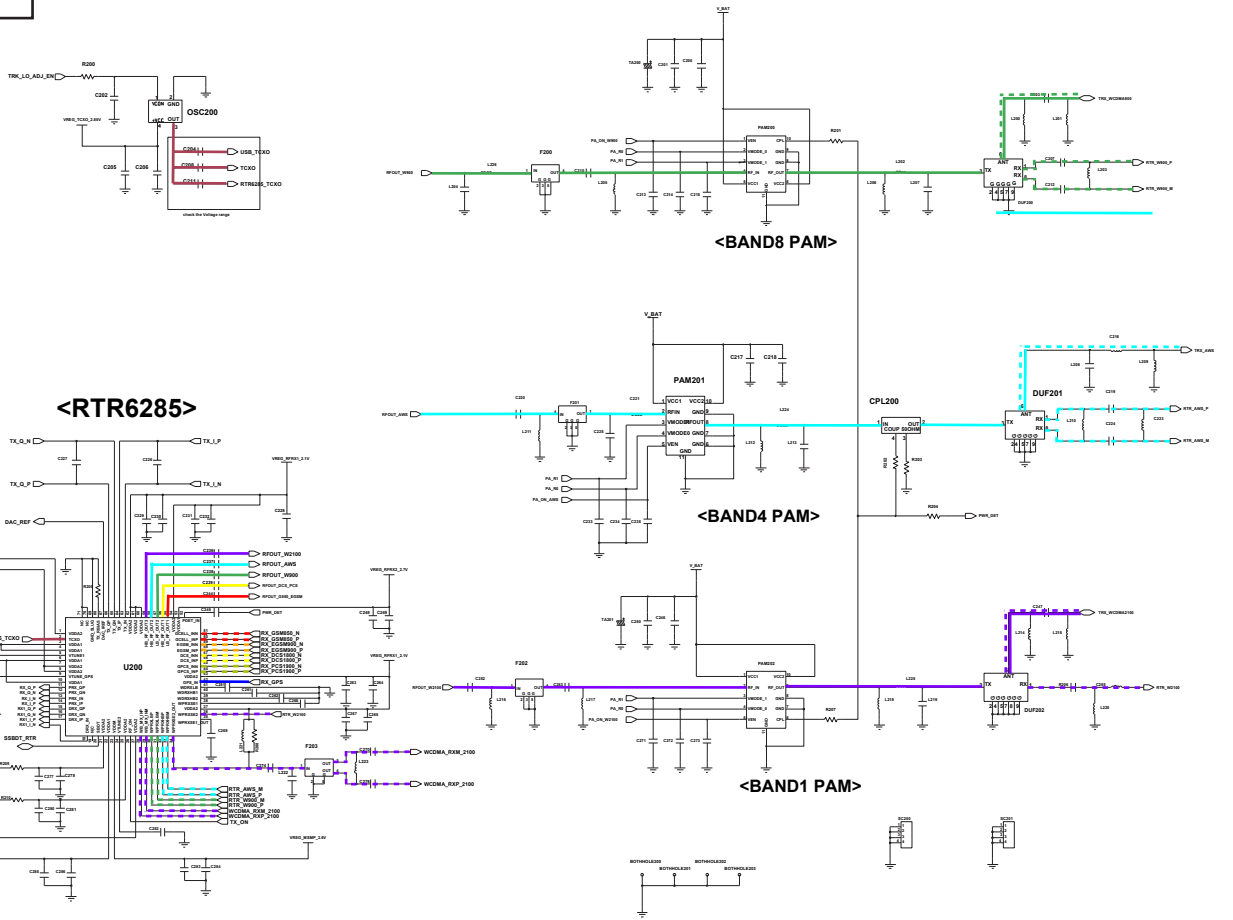

Service schematics

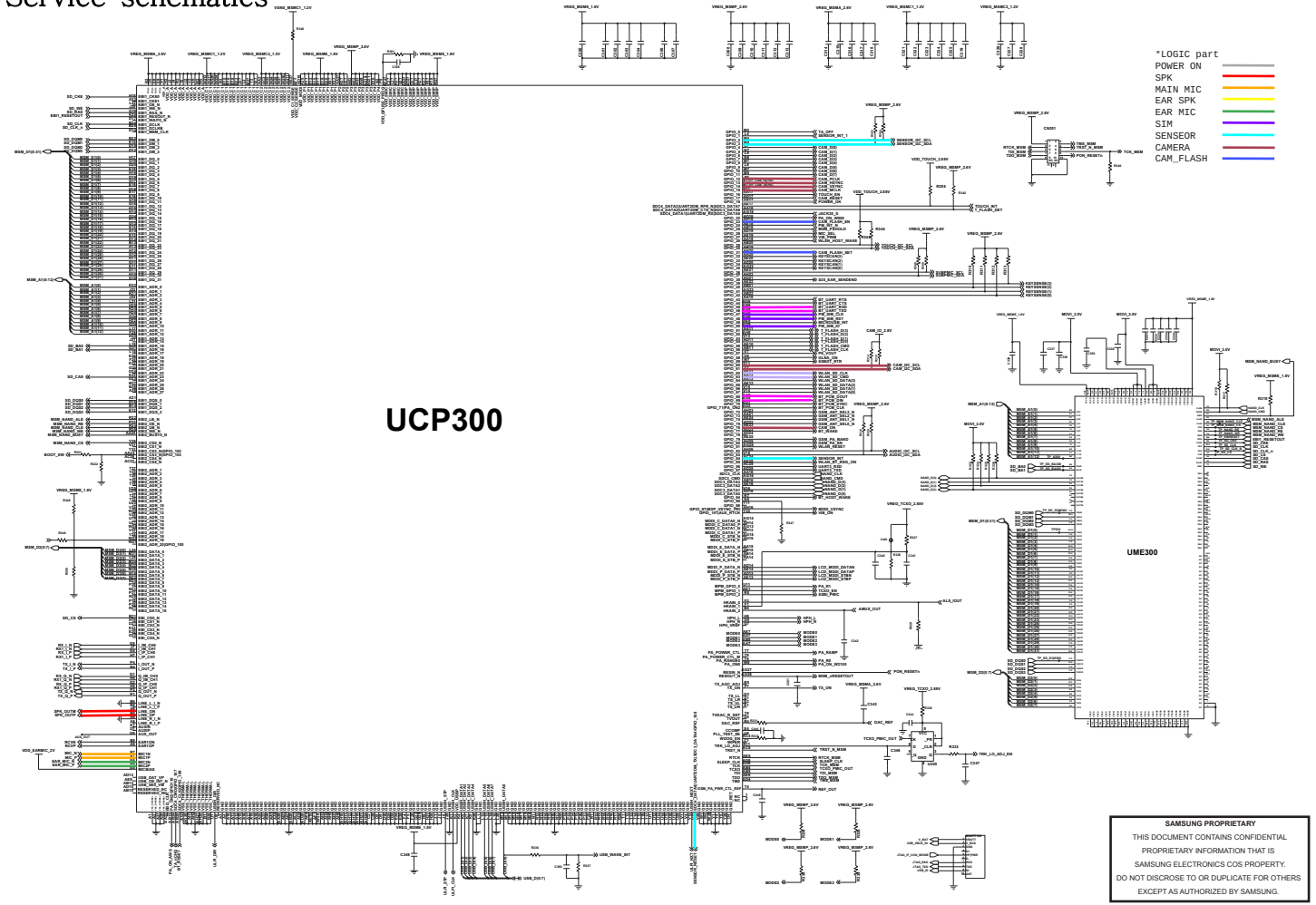

Service schematics

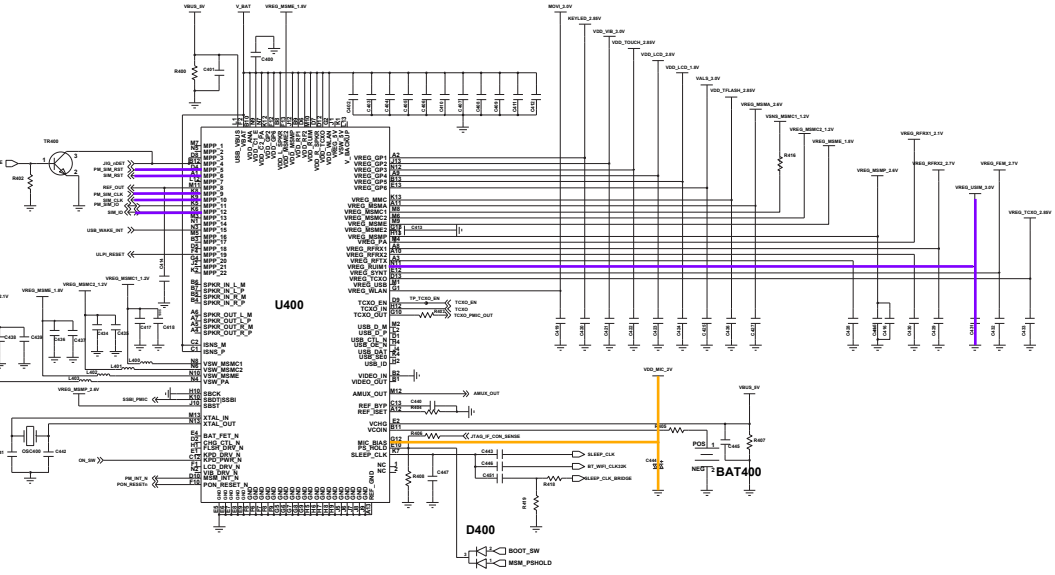

BAT CONTACT

CHARGING BLOCK

Service schematics

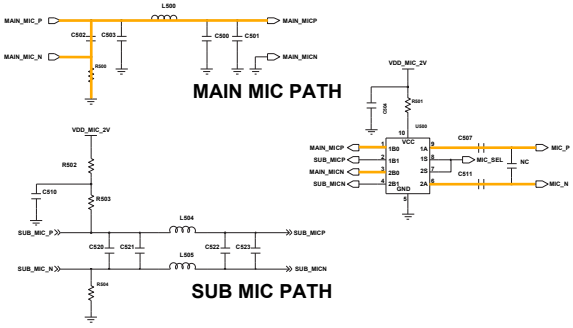

MAIN MIC PATH

SUB MIC PATH

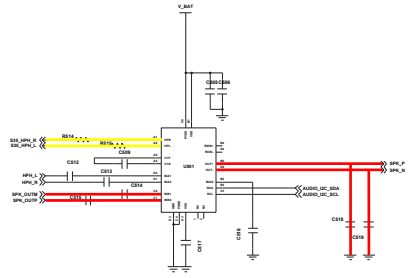

AUDIO AMP

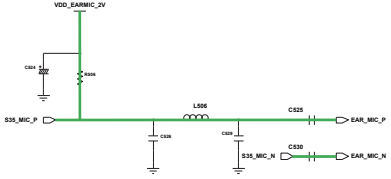

EAR MIC PATH

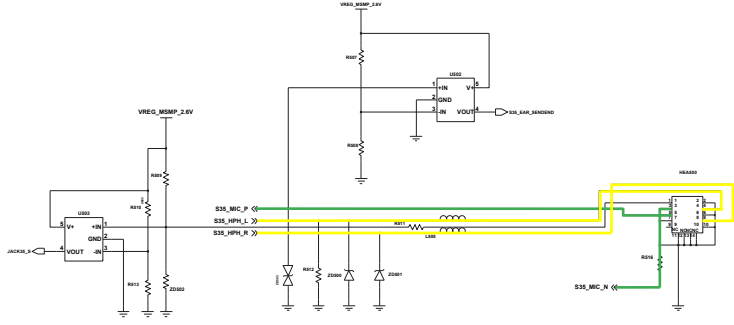

3.5PI EARJACK

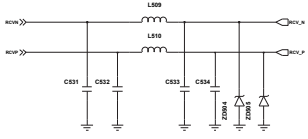

RECEIVER PATH

Service schematics

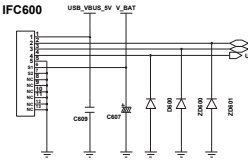

USB CONNECTOR

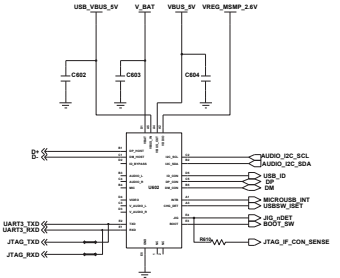

USB SWITCH

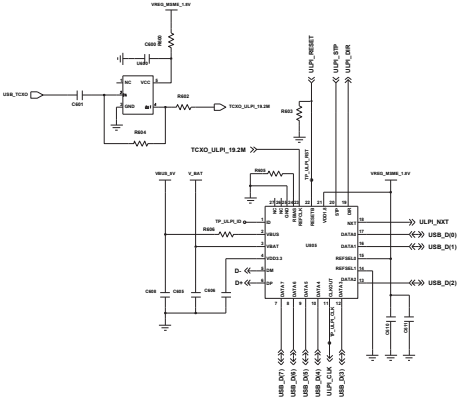

(USB2.0_ULPI_TRANCIEVER)

Service schematics

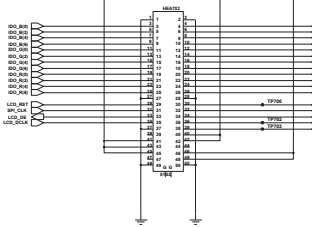

LCD MDDI CON

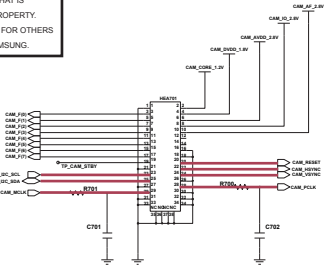

5M CAMERA CON

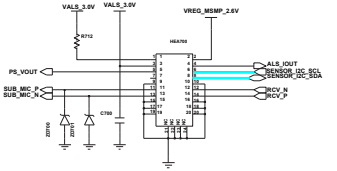

LIGHT SENSEOR CON

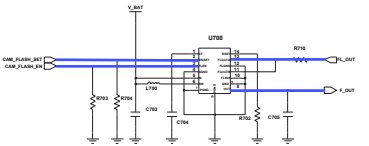

FLASH POWER

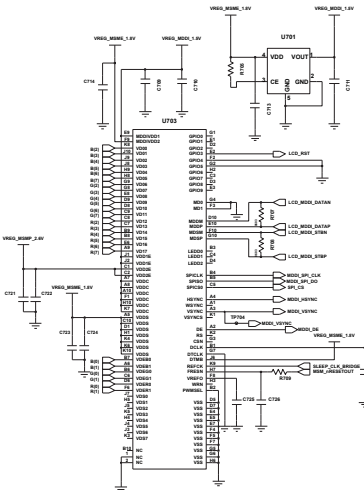

MDDI TO RGB BRIDGE IC

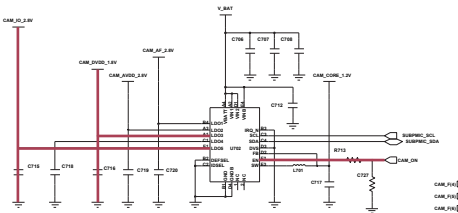

CAM SUB PMIC

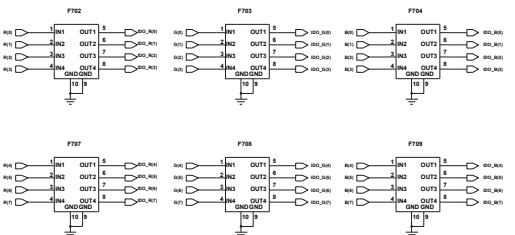

Service schematics

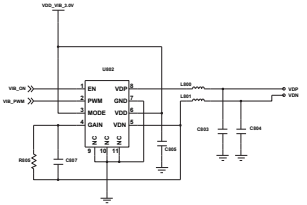

VIBTONZ_DRIVER

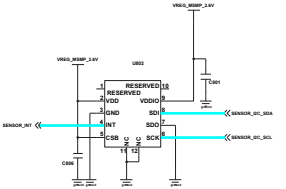

3-AXIS Accelerator

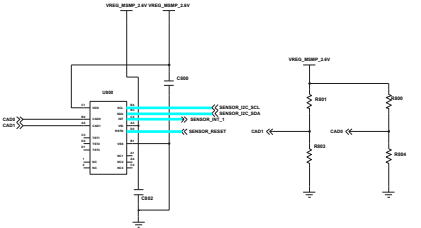

E-COMPASS

Slave Address Select		
CAD1	CAD0	Address
0	0	0 0 1 1 1 0 0 R/W
0	1	0 0 1 1 1 0 1 R/W
1	0	0 0 1 1 1 1 0 R/W
1	1	0 0 1 1 1 1 1 R/W

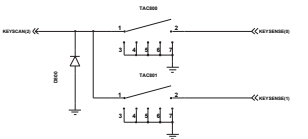

VOLUME_KEY

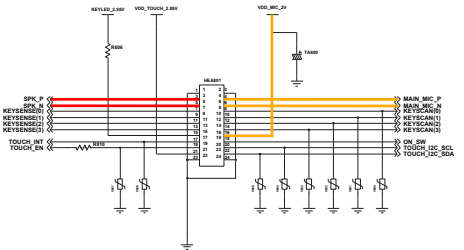

KEY PCB CON

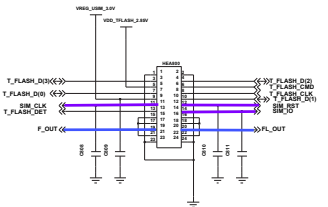

SIM+TF SOCKET CAMERA FLASH

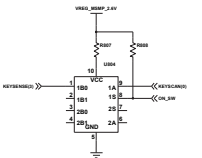

KEY INTERRUPT

SAMSUNG
ELECTRONICS

GSPN (Global Service Partner Network)

Country	Web Site
North America	service.samsungportal.com
Latin America	latin.samsungportal.com
CIS	cis.samsungportal.com
Europe	europe.samsungportal.com
China	china.samsungportal.com
Asia	asia.samsungportal.com
Mideast & Africa	mea.samsungportal.com

2009. 07. Rev.1.0