LG

Service Manual

Model : MG210

LG

Service Manual

MG210

Date: May, 2006 / Issue 1.0

REVISED HISTORY

DATE	ISSUE	CONTENTS OF CHANGES	S/W VERSION
3/Mar/2006	ISSUE 0.1	Initial Release	

The information in this manual is subject to change without notice and should not be construed as a commitment by LGE Inc. Furthermore, LGE Inc. reserves the right, without notice, to make changes to equipment design as advances in engineering and manufacturing methods warrant.

This manual provides the information necessary to install, program, operate and maintain the MG210.

Table of Contents

1. Introduction 5

1.1 Purpose..... 5
1.2 Regulatory Information..... 5
1.3 Abbreviations 7

2. General Performance..... 9

2.1 Product Name 9
2.2 Supporting Standard 9
2.3 Main Parts: GSM Solution.....9
2.4 H/W Features.....10
2.5 S/W Features 12

3. H/W Circuit Description..... 14

3.1 General Description 14
3.2 Receiver Part 14
3.3 Transmitter Part 17
3.4 Digital Baseband (DBB) Processor.....20
3.5 Analog Baseband (ABB) Processor..... 25

4. TROUBLE SHOOTING 43

4.1 Main Components Placement..... 43
4.2 KEYPAD Components Placement..... 44
4.3 FPCB Components Placement..... 45
4.4 Baseband Components 45
4.5 Main Components (Description) 46
4.6 Power On Trouble..... 47
4.7 Charging Trouble 48
4.8 LCD Display Trouble..... 50
4.9 Receiver Trouble..... 52
4.10 Microphone Trouble 56
4.11 Vibrator Trouble 59
4.12 Keypad Backlight Trouble 61
4.13 FOLDER Open/Close Trouble 63
4.14 SIM Detect Trouble 65
4.15 Earphone Trouble 67
4.16 RF Part Troubleshooting.....72

5. DOWNLOAD 89

5.1 Download Setup..... 89
5.2 Download Procedure 90

6. SERVICE AND CALIBRATION..... 97

6.1 Calibration.....97

7. CIRCUIT DIAGRAM 101

8. PCB LAYOUT..... 105

9. ENGINEERING MODE..... 107

10. STANDALONE TEST..... 108

10.1 Setting Method 108

11. EXPLODED VIEW & REPLACEMENT PART LIST 109

11.1 EXPLODED VIEW 109
11.2 Replacement Parts
<Mechanic component>..... 111
<Main component> 113
11.3 Accessory 124

1. Introduction

1.1 Purpose

This manual provides the information necessary to repair, calibration, description and download the features of the MG210.

1.2 Regulatory Information

A. Security

Toll fraud, the unauthorized use of telecommunications system by an unauthorized part (for example, persons other than your company's employees, agents, subcontractors, or person working on your company's behalf) can result in substantial additional charges you're your telecommunications services. System users are responsible for the security of own system. There are may be risks of toll fraud associated with your telecommunications system. System users are responsible for programming and configuring the equipment to prevent unauthorized use. LGE does not warrant that this product is immune from the above case but will prevent unauthorized use of common-carrier telecommunication service of facilities accessed through or connected to it. LGE will not be responsible for any charges that result from such unauthorized use.

B. Incidence of Harm

If a telephone company determines that the equipment provided to customer is faulty and possibly causing harm or interruption in service to the telephone network, it should disconnect telephone service until repair can be done. A telephone company may temporarily disconnect service as long as repair is not done.

C. Changes in Service

A local telephone company may make changes in its communications facilities or procedure. If these changes could reasonably be expected to affect the use of the MG210 or compatibility with the network, the telephone company is required to give advanced written notice to the user, allowing the user to take appropriate steps to maintain telephone service.

D. Maintenance Limitations

Maintenance limitations on the MG210 must be performed only by the LGE or its authorized agent.
The user may not make any changes and/or repairs expect as specifically noted in this manual.
Therefore, note that unauthorized alternations or repair may affect the regulatory status of the system and may void any remaining warranty.

E. Notice of Radiated Emissions

The MG210 complies with rules regarding radiation and radio frequency emission as defined by local regulatory agencies. In accordance with these agencies, you may be required to provide information such as the following to the end user.

F. Pictures

The pictures in this manual are for illustrative purposes only; your actual hardware may look slightly different.

G. Interference and Attenuation

An MG210 may interfere with sensitive laboratory equipment, medical equipment, etc. Interference from unsuppressed engines or electric motors may cause problems.

H. Electrostatic Sensitive Devices

ATTENTION

Boards, which contain Electrostatic Sensitive Device (ESD), are indicated by the sign. Following information is ESD handling:

- Service personnel should ground themselves by using a wrist strap when exchange system boards.
- When repairs are made to a system board, they should spread the floor with anti-static mat which is also grounded.
- Use a suitable, grounded soldering iron.
- Keep sensitive parts in these protective packages until these are used.
- When returning system boards or parts like EEPROM to the factory, use the protective package as described.

1.3 Abbreviations

For the purposes of this manual, following abbreviations apply:

APC	Automatic Power Control
BB	Baseband
BER	Bit Error Ratio
CC-CV	Constant Current - Constant Voltage
DAC	Digital to Analog Converter
DCS	Digital Communication System
dBm	dB relative to 1 milliwatt
DSP	Digital Signal Processing
EEPROM	Electrical Erasable Programmable Read-Only Memory
EL	Electoluminescence
ESD	Electrostatic Discharge
FPCB	Flexible Printed Circuit Board
GMSK	Gaussian Minimum Shift Keying
GPIB	General Purpose Interface Bus
GSM	Global System for Mobile Communications
IPUI	International Portable User Identity
IF	Intermediate Frequency
LCD	Liquid Crystal Display
LDO	Low Drop Output
LED	Light Emitting Diode
OPLL	Offset Phase Locked Loop
PAM	Power Amplifier Module

1. Introduction

PCB	Printed Circuit Board
PGA	Programmable Gain Amplifier
PLL	Phase Locked Loop
PSTN	Public Switched Telephone Network
RF	Radio Frequency
RLR	Receiving Loudness Rating
RMS	Root Mean Square
RTC	Real Time Clock
SAW	Surface Acoustic Wave
SIM	Subscriber Identity Module
SLR	Sending Loudness Rating
SRAM	Static Random Access Memory
STMR	Side Tone Masking Rating
TA	Travel Adapter
TDD	Time Division Duplex
TDMA	Time Division Multiple Access
UART	Universal Asynchronous Receiver/Transmitter
VCO	Voltage Controlled Oscillator
DCXO	Digitally Control Crystal Oscillator
WAP	Wireless Application Protocol

2. General Performance

2.1 Product Name

MG210: Support GPRS (Class 10)

2.2 Supporting Standard

Item	Feature	Comment
Supporting Standard	GSM900/DCS1800/PCS1900 Tri-Band (900/1800/1900 - MG210c) GSM850/DCS1800/PCS1900 Tri-Band (850/1800/1900 - MG210d) Triple-Band with seamless handover Phase 2+(include AMR) SIM Toolkit : Class 1,2,3,A~E	
Frequency Range	GSM850 TX : 824 - 849 MHz GSM850 RX : 869 - 894 MHz GSM900 TX : 880 - 915 MHz GSM900 RX : 925 - 960MHz DCS1800 TX : 1710 - 1785 MHz DCS1800 RX : 1805 - 1880 MHz PCS1900 TX : 1850 -1910 MHz PCS1900 RX : 1930 -1990 MHz	
Application Standard	WAP 2.0 JAVA 2.0	

2.3 Main Parts: GSM Solution

	MG180c
Digital Baseband	Calypso-AMR C035 (D751992AZHHR)
Analog Baseband	IOTA Shrink (TWL3025)
RF Chip	Aero II/ Si4210

2.4 H/W Features

Item	Feature	Comment
Form Factor	Single LCD Folder	
Battery	1) Capacity Standard : Li-ion, Min 830mAh (LG Chem)	Size(mm) : 34.15(W) x 53.55(H) x 4.5(T) Weight: 25g under
	Standard : 84X44X21.5 mm	
Size	Standard : 84X44X21.5 mm	
Weight	75gram	
Volume	79cc	
PCB	One PCB : 8 Layers , 1t	
Stand by time	250 hours more	DRX9
Charging time	3 hours under	
Talk time	Min : 2hours	GSM900 TX Level 5 GSM850 TX Level 5
RX sensitivity	GSM 850/900 : -108 dBm DCS/PCS : -106 dBm	
TX output power	GSM 850/900 : 33 dBm DCS /PCS : 30 dBm	Class4 (GSM) Class1 (DCS/PCS)
GPRS compatibility	GPRS Class 10	
SIM card type	Plug-In SIM 3V	
Display	Main LCD 128 x 128, 65K Color CSTN Backlight : White LED	
Built-in Camera	N.A.	

Status Indicator	2 color LED	
Keypad	Alpha/numeric Key : 12 Function Key : 12 Total # of Keys : 24	Function Key: 4 Key Navigation, I, SND, END/PWR, CLR, menu, select, Side key up/down
ANT	Fixed Type	Internal Antenna
System connector	24 Pin	
Ear Phone Jack	3 Pole (2.5mm)	
PC synchronization	YES	
Memory	Flash : 128Mbit SRAM : 64Mbit	
Speech coding	FR, EFR, HR,AMR	
Data & Fax	Built in Data & Fax support	
Vibrator	Built in Vibrator	
IrDA	NO	
MIDI(for Buzzer Function)	General MIDI 40 Poly	Buzzer Function By Using Speaker Phone & MIDI IC
Voice Recording	YES	
Speaker Phone	YES	Speakerphone mode support
Travel Adapter	YES	
CDROM	NO	
Options	Ear-Microphone Data Cable Cigarette Lighter Adapter	

2.5 S/W Features

Item	Feature	Comment
RSSI	0 ~ 5 Levels	
Battery Charging	0 ~ 4 Levels	
Key Volume	0 ~ 5 Level	
Audio Volume	1 ~ 5 Level	
Time / Date Display	Yes	
Multi- Language	Yes	English/Spanish/Portuguese
Quick Access Mode	Phone Book / scheduler/ Sound / Message	
Speed Dial	Yes (2 ~ 9)	Voice mail center -> 1 key
CLIP / CLIR	Yes (different melody)	
Phone Book	3 Numbers + 1 Memo + 1 e-mail- + Group Select	Total 255 Member
Last Dial Number	Yes (20)	
Last Received Number	Yes (20)	
Last Missed Number	Yes (10)	
Search by Number / Name	Name / Number	
Group	7	Possible Rename
Fixed Dial Number	Yes	
Service Dial Number	Yes	
Own Number	Yes	
Voice Memo	Yes	
Call Reminder	Yes	
Network Selection	Manual	
Mute	Yes	
Call Divert	Yes	
Call Barring	Yes	
Call Charge (AoC)	Yes	
Call Duration	Yes	
SMS (EMS)	100	EMS : Release4 (Except Text align)
E- Mail	No	
SMS Over GPRS	Yes	

Item	Feature	Comment
Game	1	Java Game
Calendar	Yes	
Memo	20	
World Clock	Yes	
Unit Convert	Length/Surface/Volume/Weight	
Fax & Data	Yes	
Wall Paper	Yes	Default : 3ea
WAP Browser	WAP 2. 0	Openwave 6.2
Download Melody / Wallpaper	Yes	Over WAP
SIM Lock	Yes	Operator Dependent
SIM Toolkit	Class 1, 2, 3, A - E	
MMS	No	
EONS	Yes	
CPHS	Yes	V4.2
Camera	NO	
JAVA	Yes	CLDC V1. 1 / MIDP V 2.0 Download Over WAP
Voice Dia	No	
IrDA	No	
GPRS	Yes	Class10
Hold / Retrieve	Yes	
Conference Call	Yes	Max. 6
DTMF	Yes	
Memo pad	Yes	Max. 20
TTY	No	
AMR	Yes	

3. H/W Circuit Description

3.1 General Description

The RF parts consist of a transceiver part, a power amplifier part, a front-end module part, a voltage supply part, and a VC-TCXO part.
The AeroII transceiver is composed of single RF chipset, Si4210-GM[U400] which is a quadband GSM/GPRS wireless communications.
This device integrated a receiver based on a low IF (200KHz) architecture and a transmitter based on modulation loop architecture. The transceiver employed a 3 wire serial interface to allow an external system controller to write the control registers for dividers, receive path gain, power down setting, and other controls.

3.2 Receiver Part

The receiver part uses a low-IF receiver architecture that allows for the on-chip integration of the channel selection filters, eliminating the external RF image reject filters and the IF SAW filter required in conventional super-heterodyne architecture. The Si4210-GM[U400] integrates four differential input LNAs that are matched to the 200 Ohm balanced-output SAW filters through external LC matching networks.
A quadrature image-rejection mixer downconverts the RF signal to a 200kHz intermediate frequency (IF) with the RFLO from the frequency synthesizer. The mixer output is amplified with an analog programmable gain amplifier (PGA) and quadrature IF signal is digitized with high resolution A/D converters (ADCs).
The Si4210-GM[U400] downconverts the ADC output to baseband with a digital 200kHz quadrature LO signal. Digital decimation and IIR filters perform digital filtering , and remove blocking and reference interference signals. After filtering, the digital output is scaled with digital PGA, which is controlled with the DGAIN[5:0] bits in register 20h. The amplified digital output signal go through with DACs that drive a differential analog signal onto the RXIP,RXIN,RXQP and RXQN pins to interface to standard analog ADC input baseband ICs.

	Antenna Bar Number	Rx Power (dBm)
Antenna Display	5 → 4	-85dBm±2dBm
	4 → 3	-90dBm±2dBm
	3 → 2	-95dBm±2dBm
	2 → 1	-100dBm±2dBm
	1 → 0	-105dBm±2dBm

Table 3-1. Antenna Display

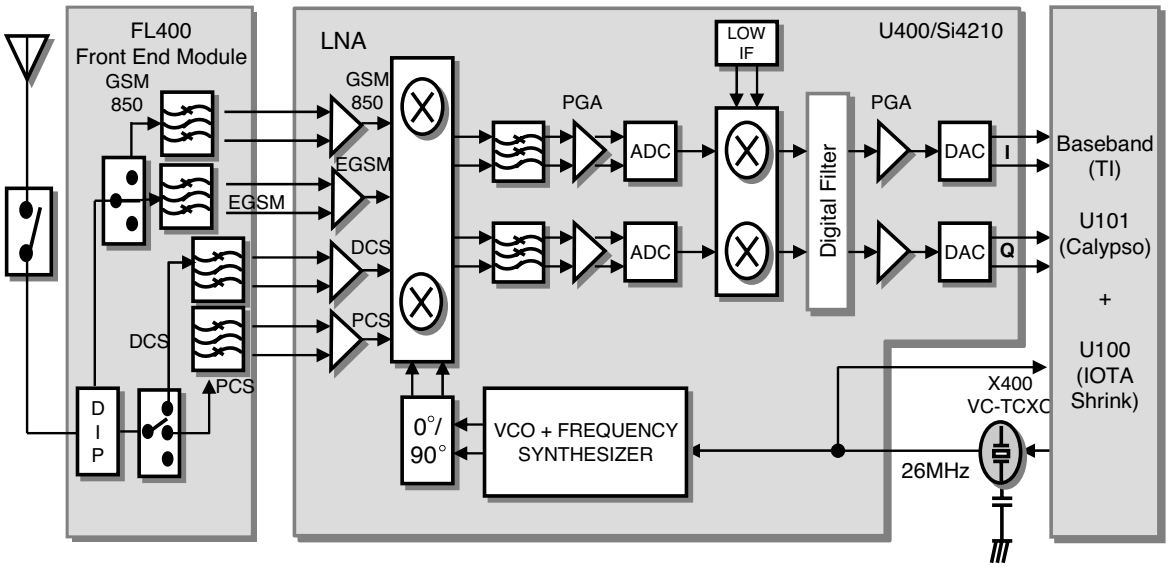

Figure 1. RF Receiver Block

3.2.1. RF Front End

RF front end consists of Front End Module(FL400), quad band LNAs integrated in transceiver(U400). The Received RF signals (GSM-850 869MHz ~ 894MHz, EGSM 880 MHz ~ 960MHz, DCS 1710 MHz ~ 1880 MHz, PCS 1930MHz ~ 1990MHz) are fed into the antenna or mobile switch. An antenna matching circuit is between the antenna and the mobile switch. The Front End Module(FL400) is used for control the Rx and TX paths. And the input signals ANT_SW1 , ANT_SW2 and ANT_SW3 of a FL400 are directly connected to baseband controller to switch either TX or RX path on.
Front End Module(FL400) is an antenna switch module for Quad band phone. The logic and current is given below Table 3-2.

Switch Mode	VC1	VC2	VC3	VDD
Tx 1GHz	H	L	L	H
Tx 2GHz	H	H	L	H
GSM850 Rx	L	H	H	H
GSM900 Rx	L	H	L	H
DCS1800 Rx	L	L	H	H
PCS1900 Rx	L	L	L	H

Table 3-2. The Logic and Current

3.2.2. Synthesizer

The Aero II transceiver integrates two complete PLLs including VCOs, varactors, resonators, loop filters, reference and VCO dividers, and phase detectors. The RF PLL uses two multiplexed VCOs. The RF1 VCO is used for receive mode, and the RF2 VCO is used for transmit mode. The IF PLL is used only during transmit mode. All VCO tuning inductors are also integrated. The IF and RF output frequencies are set by programming the N-Divider registers, NRF1, NRF2 and NIF. Programming the N-Divider register for either RF1 or RF2 automatically selects the proper VCO.

Transmit modes should always use f∅ = 200kHz. The IF and RF output frequencies are set by programming the N-Divider registers and also programmed via 3-wire interface with external system controler.

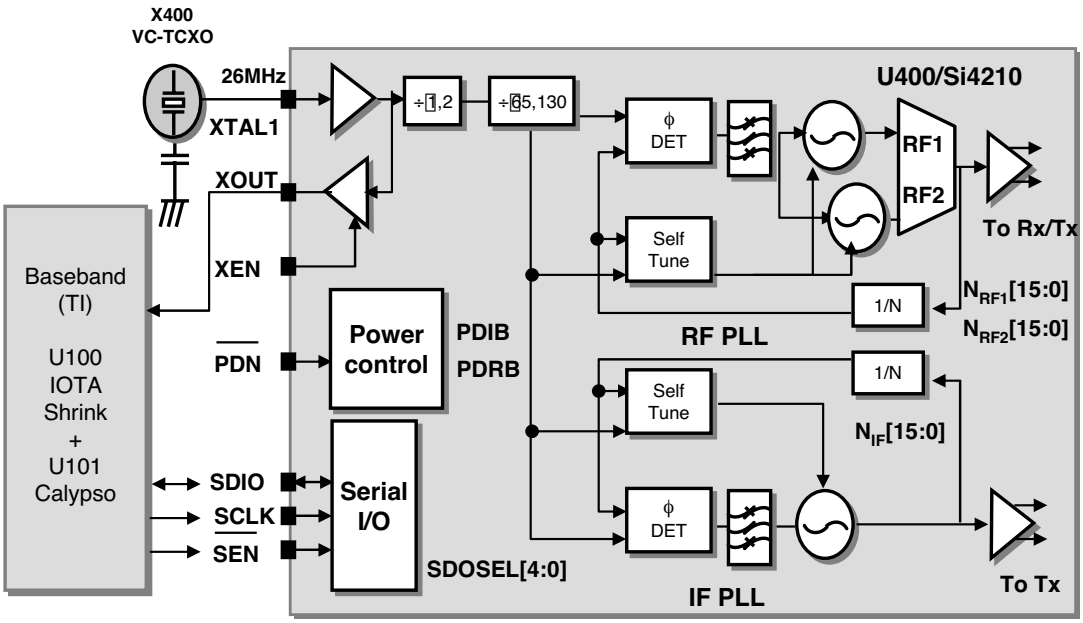

Figure 2. Synthesizer Block

3.3 Transmitter Part

The Transmitter part contains the transmitter parts of Si4210-GM[U400], Power Amp Module[U401] and Front End Module[FL400]. The transmit section of Si4210-GM[U400] consists of an I/Q base band up_converter, an offset phase-locked loop(OPLL) and two output buffers that can drive external power amplifiers(PA).

The RF GMSK outputs from the transmit VCO are fed directly to the RF power amplifiers. The peak output power and the profile of the transmitted burst are controlled by means of incorporated power control circuits inside of PA and DAC output from the Base band Controller. The PA outputs pass to the antenna connector via Front End Module.

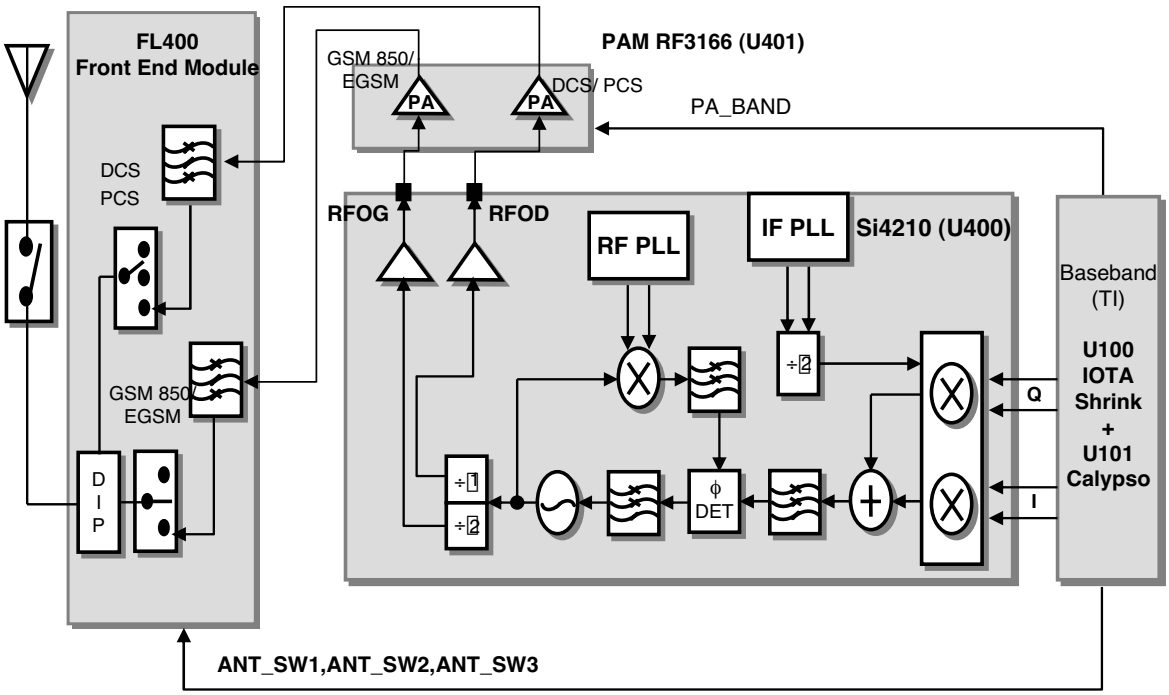

Figure 3. RF Transmit Block

3.3.1 Power Amplifier

The RF3166 [U401] is a quad-band EGSM 900/GSM 850/DCS/PCS power amplifier module that incorporat es an indirect closed loop method of power control. The indirect closed loop is fully self-contained and it do es not require loop optimization. It can be driven directly from the DAC output in the baseband circuit. On-board power control provides over 37 dB of control range with an analog voltage input(Vramp). Efficien cy is 60% at GSM and 55% at DCS/PCS.

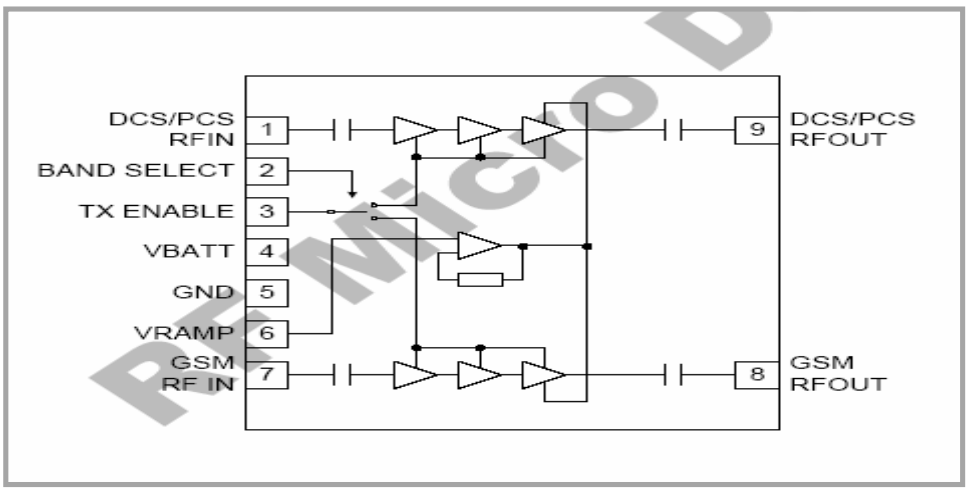

Figure 4. Functional Block Diagram

3.3.2. 26MHz Clock

The 26 MHz clock consists of a TCXO(Temperature Compensated Crystal Oscillator) which oscillates at a frequency of 26 MHz. It is used within the Si4210 RF Main Chip, BB Analog chip-set(IOTA Shrink), Digital chip-set(Calypso-).

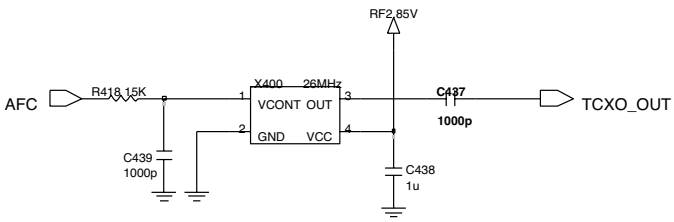

Figure 5. VC-TCXO Circuit

3.3.3 Power Supplies and Control Signals

An external regulator(U403) is used to provide DC power to RF part. Every RF component except power amp module uses this external regulator.

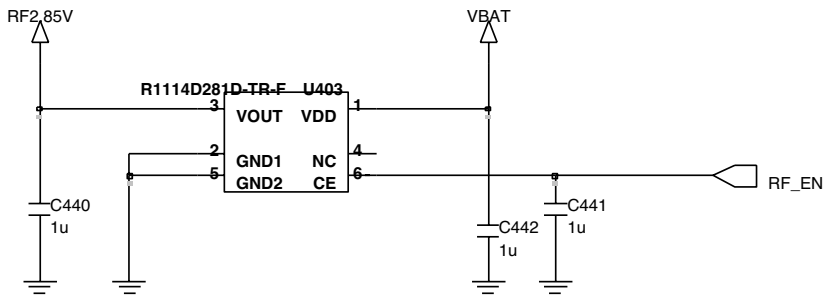

Figure 6 External regulator Circuit

3.4 Digital Baseband (DBB) Processor

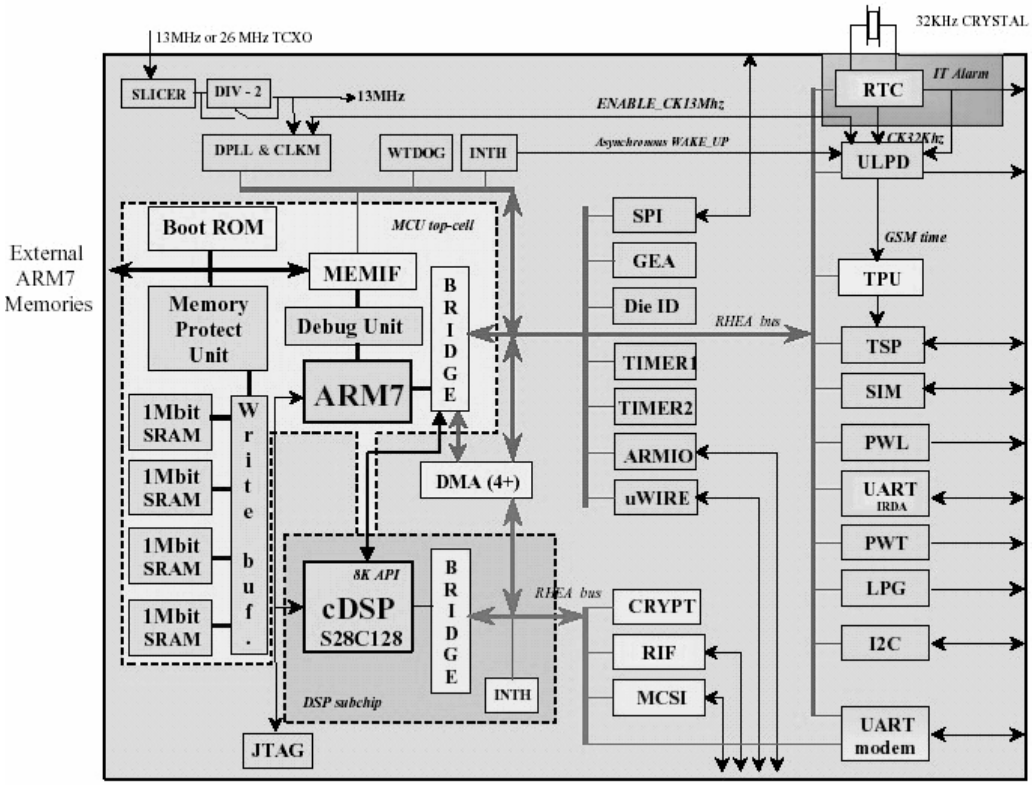

Figure 7. Top level block diagram of the Calypso-AMR C035(D751992AZHHR)

3.4.1. General Description

CALYPSO is a chip implementing the digital base-band processes of a GSM/GPRS mobile phone. This chip combines a DSP sub-chip (LEAD2 CPU) with its program and data memories, a Micro- -Controller core with emulation facilities (ARM7TDMIE), internal 8Kb of Boot ROM memory, 4M bit SRAM memory, a clock squarer cell, several compiled single-port or 2-ports RAM and CMOS gates.
The chip will fully support the Full-Rate, Enhanced Full-Rate and Half-Rate speech coding.
CALYPSO implements all features for the structural test of the logic (full-SCAN, BIST, PMT, JTAG boundary-SCAN).

3.4.2. Block Description

CALYPSO architecture is based on two processor cores ARM7 and DSP using the generic RHEA bus standard as interface with their associated application peripherals.
CALYPSO is composed from the following blocks:

- ARM7TDMIE : ARM7TDMI CPU core
- DSP subchip
- ARM peripherals:

General purpose peripherals

- ARM Memory Interface for external RAM, Flash or ROM
- 4 Mbit Static RAM with write-buffer

Application peripherals

- ARM General purposes I/O with keyboard interface and two PWM modulation signals
- UART 16C750 interface (UART_IRDA) with
  →IRDA control capabilities (SIR)
  →Software flow control (UART mode).
- UART 16C750 interface (UART_MODEM) with
  →Hardware flow protocol (DCD, CTS/RTS)
  →Autobaud function
- SIM Interface.
- TPU(Time Processing Unit) : Processing for GSM time base
- TSP(Time Serial Port) : GSM data interface with RF and ABB

Memory Interface : External/Internal Memory Interface

nCS0 : FLASH1, 16bit access, 4 wait state

nCS1 : FLAHS2, 16bit access, 4 wait state

nCS2 : Ext SRAM, 16bit access, 4 wait state

nCS3 : Main LCD(16bit access), 6 wait state

nCS4 : MIDI(8bit access), 5 wait state

nCS6 : Int SRAM, 32bit access, 0 wait state

- Calypso is internally 52MHz machine (19ns machine cycle), so it requires 4 wait-state for 80ns access(19*5 = 95 ns).

3.4.3 RF Interface (TPU, TSP Block)

Calypso uses this interface to control IOTA_CS(ABB Processor) and AERO(RF Processor) with GSM Time Base

TSP (Time Serial Port)		
Resource	Interconnection	Description
TSPDO	ABB & RF main Chip	Control Data
TSPEN0	ABB	ABB Control Data Enable Signal
TSPEN1	RF main Chip	RF Control Data Enable Signal
TSP (Time Serial Port)		
TSPACT0	_PDNB	RF main Chip Reset Signal
TSPACT1	PA_ON	Power Amp ON signal
TSPACT2	PA_BAND	Power Amp band-selection signal
TSPACT3	ANT_SW1	Ant. Switch control signal
TSPACT4	ANT_SW2	Ant. Switch control signal
TSPACT5	ANT_SW3	Ant. Switch control signal

Table 3-3. RF Interface Spec.

3.4.4. SIM Interface

SIM interface scheme is shown in (Figure 8).
SIM_IO, SIM_CLK, SIM_RST ports are used to communicate DBB with ABB and the Regulator in ABB enables 3V SIM operation.

SIM Interface

SIM_CLK	**SIM card reference clock**
SIM_RST	**SIM card async/sync reset**
SIM_IO	**SIM card bidirectional data line**
SIM_PWCTRL	**SIM card power activation**
SIM_CD	**SIM card presence detection**

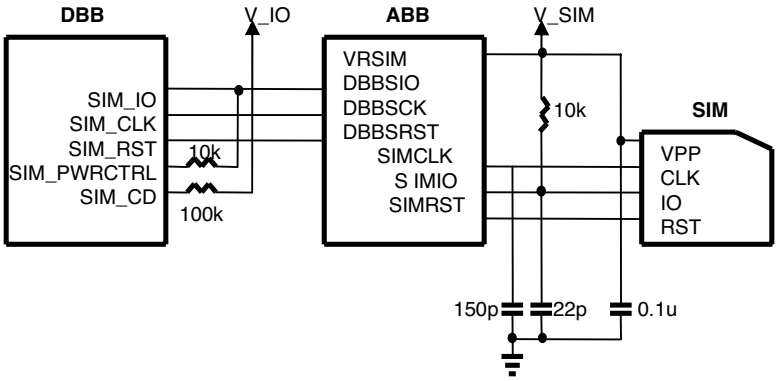

Figure 8. SIM Interface

3.4.5. UART Interface

MG210 has two UART Drivers as follow :

UART : Hardware Flow Control / Fax & Data Modem

UART MODEM (UART1)		
Resource	Name	Description
TX_MODEM	TXD	Transmit Data
RX_MODEM	RXD	Receive Data
CTS_MODEM	CTS	Clear To Send
RTS_MODEM	RTS	Request To Send
GPIO 3	DSR	Data Set Ready

Figure 3-4. UART Interface spec.

3.4.6. GPIO Map

In total 16 allowable resources, MG210 is using 13 resources except 3 resources dedicated to SIM and Memory. MG210 GPIO (General Purpose Input/Output) Map, describing application, I/O state, and enable level, is shown in below table.

I/O #	Net Name	I/O	Resource State	Inactive State	Active State
I/O (0)	INDLED_R	O	GPIO	LOW	HIGH
I/O (1)	MELODY_INT	I	GPIO	HIGH	LOW
I/O (2)	LCD_ID	I	GPIO		LOW
I/O (3)	DSR	I	GPIO	HIGH	LOW
I/O (4)	LCD_BL_EN	O	GPIO	LOW	HIGH
I/O (5)	SIM_PWCTL	O	SIM		
I/O (6)	SPK_PHN_EN	O	GPIO	LOW	HIGH
I/O (7)	LCD_RESET	O	GPIO	HIGH	LOW
I/O (8)	RCV_SPK_SEL	O	GPIO	LOW(ABB)	HIGH(MIDI)
I/O (9)	PCM_TX	O			
I/O (10)	PCM_RX	I			
I/O (11)	PCM_CLK	O			
I/O (12)	PCM_SYNC	O			
I/O (13)	NOT USED				
I/O (14)	NBHE	O	MEMORY		
I/O (15)	NBLE	O	MEMORY		

Table 3-5. GPIO Map Table

3.5 Analog Baseband (ABB) Processor

3.5.1. General Description

IOTA Shrink is Analog Baseband (ABB) Chip supports GSM850, GSM900, DCS1800, PCS1900, GPRS Class 10 with Digital Basband Chip (Calypso).
IOTA Shrink processes GSM modulation/demodulation and power management operations.

Block Description

- Audio Signal Processing & Interface
- Baseband in-phase(I), quadrature(Q) Signal Processing
- RF interface with DBB (time serial port)
- Supply voltage regulation

- Battery charging control
- Switch ON/OFF
- 3V SIM card Interface
- 4 internal & 4external ADC channels

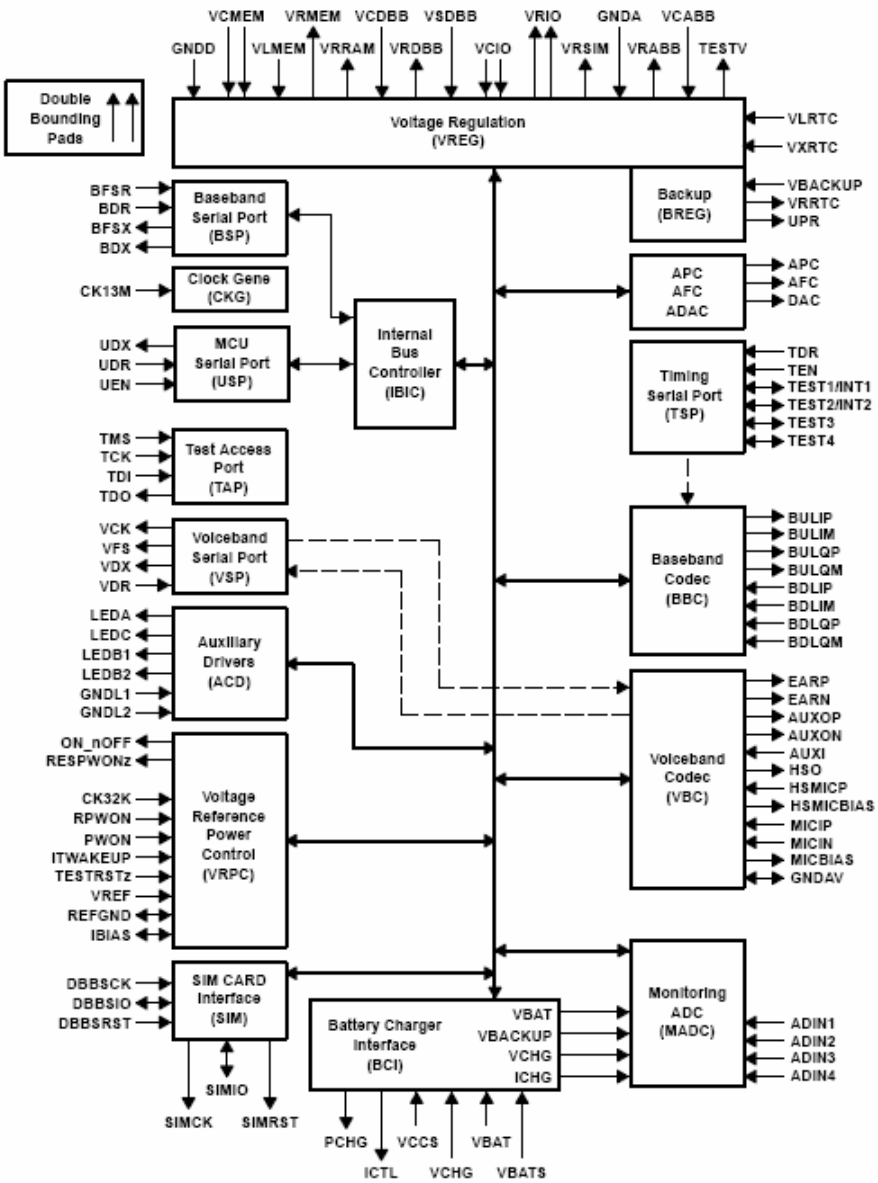

Figure 9. Top level block diagram of the IOTA Shrink(TWL3025)

3.5.2. Audio Signal Processing & Interface

The voice codec circuitry processes analog audio components in the voice uplink (VUL) path and applies this signal to the voice signal interface for eventual baseband modulation. In the voice downlink (VDL) path, the codec circuitry changes voice component data received from the voice serial interface (VSP) into analog audio.

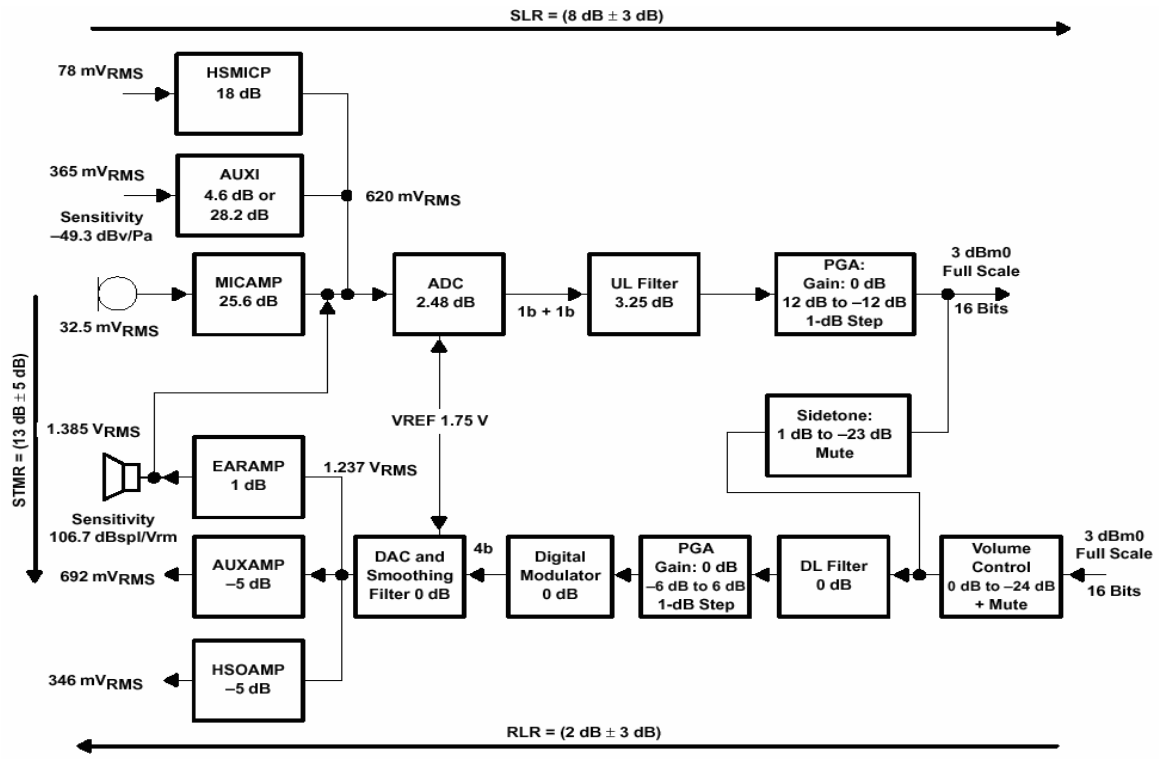

Figure 10. Audio Interface Block Diagram

3.5.3. Audio uplink processing

The VUL path includes two input stages. The first stage is a microphone amplifier, compatible with electret microphones containing a FET buffer with open drain output. The microphone amplifier has a gain of typically 25.6 dB (±1 dB) and provides an external voltage of 2.0 V or 2.5 V to bias the microphone (MICBIAS). The auxiliary audio input can be used as an alternative source for higher level speech signals. This stage performs single-ended-to differential conversion and provides a programmable gain of 4.6 dB or 28.2 dB. The third stage is a headset microphone amplifier, compatible with electret microphones. The headset microphone amplifier has a gain of typically 18 dB and provides an external voltage of 2.0 V or 2.5 V to bias the headset microphone (HSMICBIAS).

When one of the input stages (MICI, AUXI, HSMICP) is in use, the two other input stages are disabled and powered down. The resulting fully differential signal is fed to the analog-to-digital converter (ADC). The ADC conversion slope depends on the value of the internal voltage reference. Analog-to-digital conversion is performed by a third-order Σ-Δ modulator with a sampling rate of 1 MHz. Output of the ADC is fed to a speech digital filter, which performs the decimation down to 8 kHz and band-limits the signal with both low-pass and high-pass transfer functions. Programmable gain can be set digitally from -12 dB to +12 dB in 1-dB steps and is programmed with bits 4-0 (VULPG(4:0)) of the voiceband uplink register. The speech samples are then transmitted to the DSP via the VSP at a rate of 8 kHz. There are 15 meaningful output bits. Programmable functions of the VUL path, power-up, input selection, and gain are controlled by the BSP or the USP via the serial interfaces. The VUL path can be powered down by bit 0 (VULON) of the power down register.

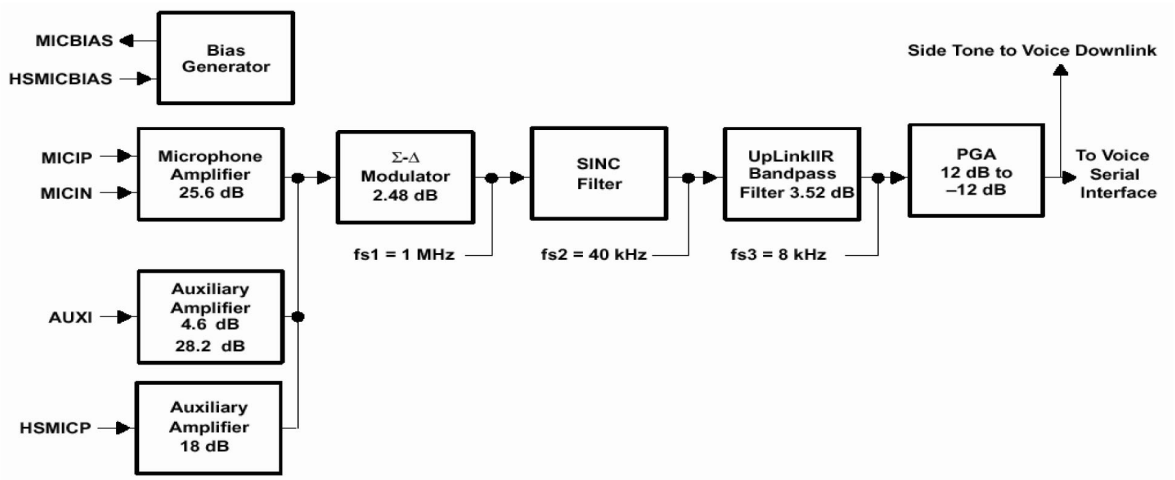

Figure 11. Uplink Path

3.5.4. Audio downlink processing

The VDL path receives speech samples at the rate of 8 kHz from the DSP via the VSP and converts them to analog signals to drive the external speech transducer. The digital speech coming from the DSP is first fed to a speech digital filter that has two functions. The first function is to interpolate the input signal and to increase the sampling rate from 8 kHz up to 40 kHz to allow the digital-to-analog conversion to be performed by an oversampling digital modulator. The second function is to band-limit the speech signal with both low-pass and high-pass transfer functions. The filter, the PGA gain, and the volume gain can be bypassed by programming bit 9 (VFBYP) in the voiceband control register 1.

The interpolated and band-limited signal is fed to a second order Σ-Δ digital modulator sampled at 1 MHz to generate a 4-bit (9 levels) oversampled signal. This signal is then passed through a dynamic element matching block and then to a 4-bit digital-to-analog converter (DAC). The volume control and the programmable gain are performed in the voiceband digital filter. Volume control is performed in steps of 6 dB from 0 dB to -24 dB. In mute state, attenuation is higher than 40 dB. A fine adjustment of gain is possible from -6 dB to +6 dB in 1-dB steps to calibrate the system depending on the earphone characteristics. This configuration is programmed with the voiceband downlink control register.

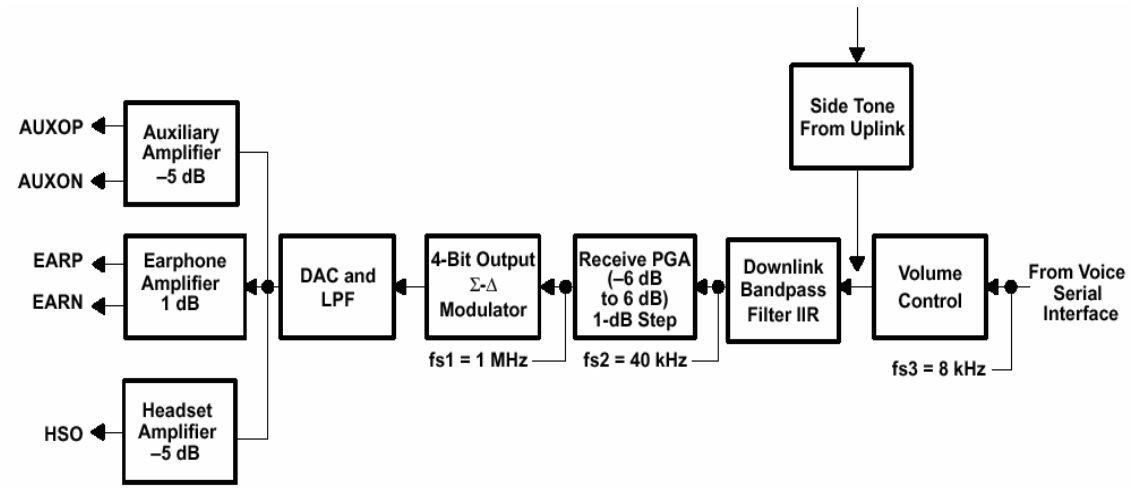

Figure 12. Downlink Path

3.5.5. Baseband Codec (BBC)

Baseband codec is composed of baseband uplink path (BUL) and baseband downlink path (BDL). BUL makes GMSK (Gaussian Minimum Shift Keying) modulated signal which has In-phase (I) component and quadrature (Q) component with burst data from DBB. This modulated signal is transmitted through RF section via air. BDL process is opposite procedure of BUL. Namely, it performs GMSK demodulation with input analog I&Q signal from RF section, and then transmit it to DSP of DBB chip with 270.833kHz data rate through BSP.

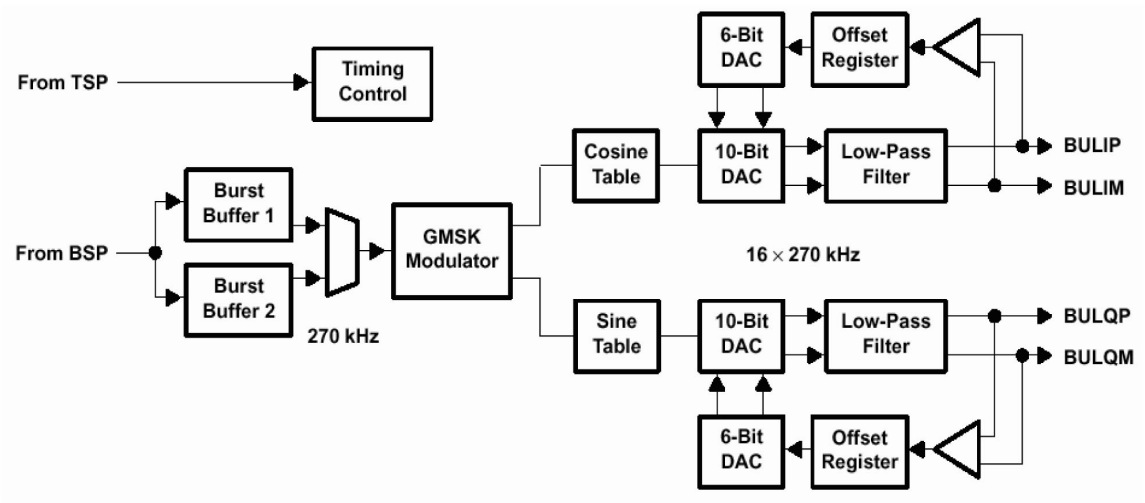

Figure 13. Baseband Codec Block Diagram

3.5.6. Voltage Regulation (VREG)

There are 7 LDO (Low Drop Output) regulators in ABB chip. The output of these 7 LDOs are as following table. (Figure14) shows the power supply related blocks of DBB/ABB and their interfaces in MG210.

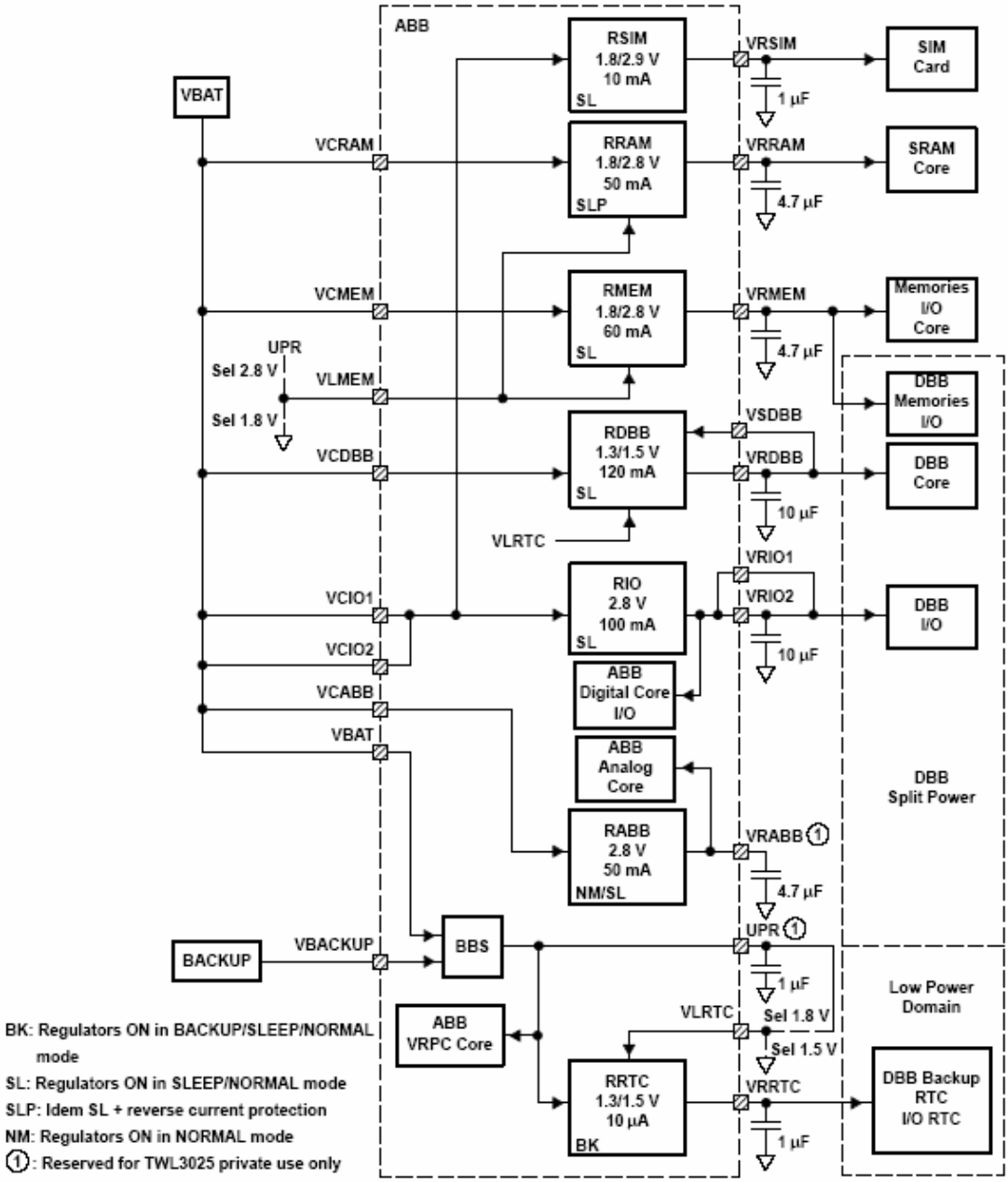

Figure 14. Power Supply Scheme

	Output Voltage	Usage
VRDBB	1.5V	Digital Core of DBB
VRIO	2.8V	Peripheral devices
VRMEM	2.8V	External memory
VRRAM	2.8V	LCD & peripheral devices
VRABB	2.8V	Analog Block of ABB
VRSIM	2.85V	SIM card driver
VRRTC	1.5V	RTC & 32kHz-crystal

Table 3-6. LDO Output Table

3.5.7. ADC Channels

ABB ADC block is composed of 4 internal ADC (Analog to Digital Converter) channels and 4 external ADC channel. This block operates charging process and other related process by reading battery voltage and other analog values.

ADC 8 Channels		
Resource	Name	Description
VCHG	VCHG	Charging Management
VBAT	VBAT	
ICHG	ICHG	
VBACKUP	VBACKUP	Backup Battery
ADCIN1	JACK_DETECT	Ear-jack Detect
ADCIN2	BATT_TEMP	Battery Detect
ADCIN3	TEMPSENSE	Temperature Sensing
ADCIN4	HOOK_DETECT	Hook Detect

Table 3-7. ADC Channel Spec

3.5.8. Charging

Charging block in ABB processes charging operation by using VBAT, ICHG value through ADC channel. Battery Block Indication and SPEC of MG210 is as follow.

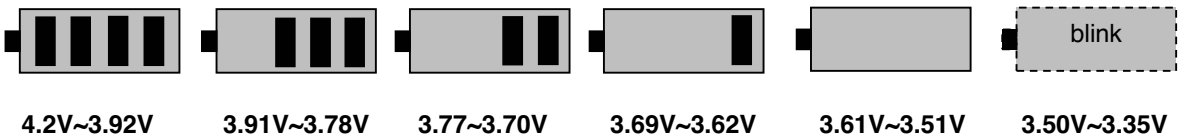

Figure 15. Battery Block Indication

2. Charger detect voltage: about 5.2V
3. Charging time: 3h under
4. Icon stop current: 100mA
5. Charging current: About 500mA
6. CV voltage: 4.2V
7. Cutoff current: 50mA
8. Full charge indication current (icon stop current) : 100mA
9. Recharge voltage: 4.16V
10. Low battery alarm
    a. Idle: 3.50V
    b. Dedicated: 3.61V
11. Low battery alarm interval :
    a. Idle: 2min
    b. Dedicated:2min
12. Switch-off voltage: 3.35V
13. Charging temperature ADC range

a. ~ -5°C : small charging operation.
b. -5°C ~ 50°C : charging.
c. 50°C ~ : not charging operation.

3.5.9. Switch On/Off

MG210 Power State : Defined 4cases as follow

→ Power-ON : mobile is powered by main battery or backup battery.

→ Power-OFF : mobile isn't any battery.

→ Switch-ON : mobile is powered and waken up from switch-off state.

→ Switch-OFF : mobile is powered to maintain only the permanent function (ULPD).

To enter into Switch-ON state, one of following 4 condition is satisfied.

→ **PWR-ON :** pushed after a debouncing time of 30ms.

→ **ON_REMOTE :** After debouncing, when a falling edge is detected on RPWON pin.

→ **IT_WAKE_UP :** When a rising edge is detected on RTC_ALARM pin.

→ **CHARGER_IC :** When a charger voltage is above VBAT+0.4V on VCHG.

3.5.10. Memories

MG210 using 128Mbit Flash + 64Mbit SRAM with 16 bit parallel data bus thru ADD01 ~ ADD22.

3.5.11. Display & FPCB Interface

LCD module include:

→ MAIN LCD: 128*128, 65,000 Color STN LCD

→ LCD Backlight: White LED illumination

MAIN BOARD AND FPCB is connected by 34pin connector. FPCB have two connectors , both connectors have 34pins. FPCB and MAIN BOARD is connected by 34 pin connector. LCD module is connect by 34pin connector .

Connector Interface Spec.(Main PCB & FPCB)

Pin #	NAME	Description
1	V_IO	2.8V Power
2	VBACKUP	Backup Battery
3	VBAT	Battery Power
4	_RD	LCD Read Control
5	D(0)	LCD Data
6	D(1)	LCD Data
7	D(2)	LCD Data
8	D(3)	LCD Data
9	D(4)	LCD Data
10	D(5)	LCD Data
11	D(6)	LCD Data
12	D(7)	LCD Data
13	WLED_A	Backlight LED ANODE
14	WLED_C1	Backlight LED CATHODE1
15	MOTOR	Vibrator
16	WLED_C2	Backlight LED CATHODE2
17	A(1)	Select Data or Instruction
18	LCD_ID	LCD MAKER ID(SII : Ground)
19	LCD_CS	LCD Chip Select
20	_WR	LCD Write Control
21	LEDC	Indicator LED (Red)
22	LEDA	Indicator LED (Green)
23	D(8)	LCD Data
24	D(9)	LCD Data
25	D(10)	LCD Data
26	D(11)	LCD Data
27	D(12)	LCD Data
28	D(13)	LCD Data
29	D(14)	LCD Data
30	D(15)	LCD Data
31	LCD_RESET	LCD Reset
32	GND	Ground
33	SPK_RCVP	Speaker & Receiver Positive
34	SPK_RCVN	Speaker & Receiver Negative

Table 3-8 Connecter Interface Spec.

3.5.12. Keypad Switching & Scanning

Table 3-10. Keypad Map

	KBC0	KBC1	KBC2	KBC3	KBC4
KBR0	LEFT	RIGHT	UP	DOWN	OK
KBR1	1	2	3	F3	
KBR2	4	5	6	F1	VOL_UP
KBR3	7	8	9	F2	VOL_DOWN
KBR4	AST	0	SHA	SEND	

DBB supports 23 Key Map and Switch-ON Key is connected directly to ABB as (Figure18).

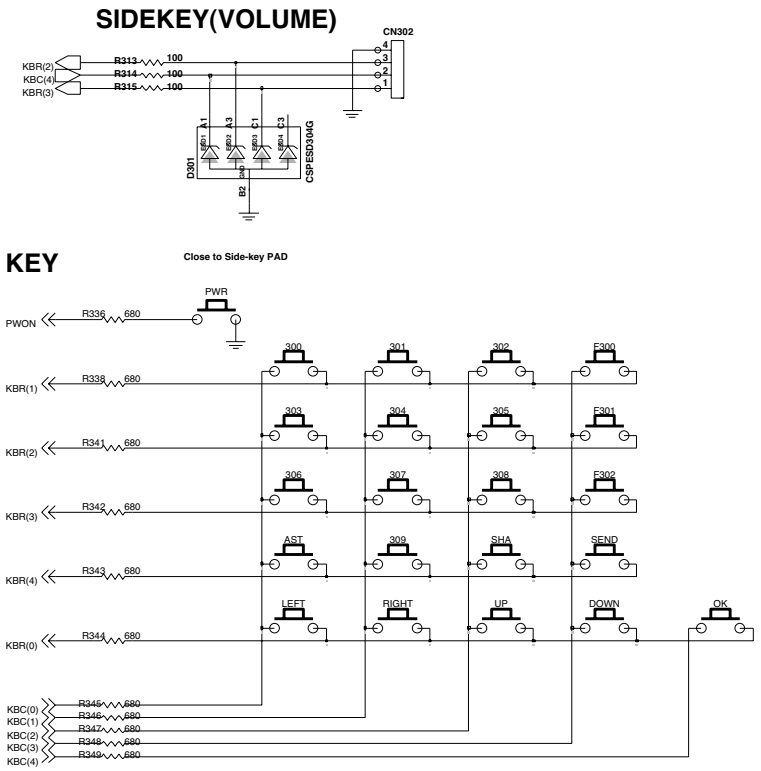

Figure 16. Keypad Scanning Scheme

3.5.13. Keypad back-light Illumination

There are 14 Deep Blue LEDs in Main Board for Keypad Backlight. Keypad Back-light is driven by 'LEDB' line from IOTA Shrink.

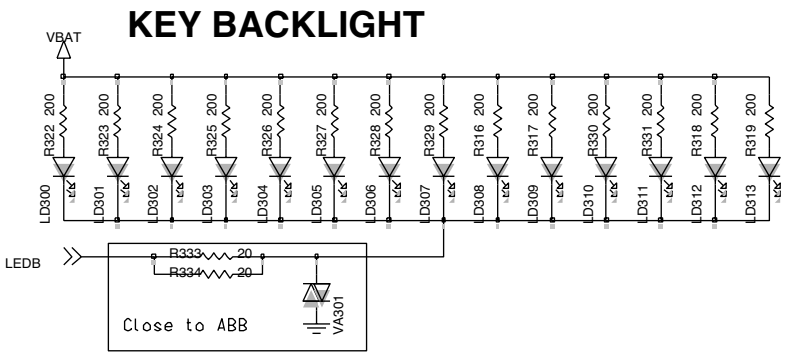

Figure 17. Keypad Back-light Scheme

3.5.14. LCD Illumination

There are 2 LEDs in the LCD module for LCD backlighting.

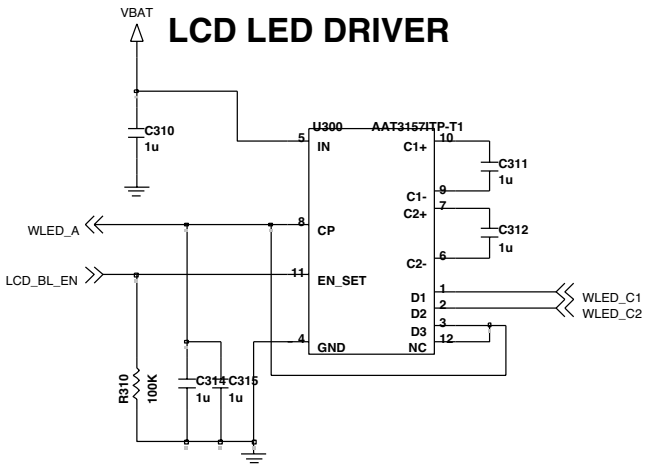

Figure 18. LCD Back-light Scheme

3.5.15. Audio Circuit

Microphone circuits

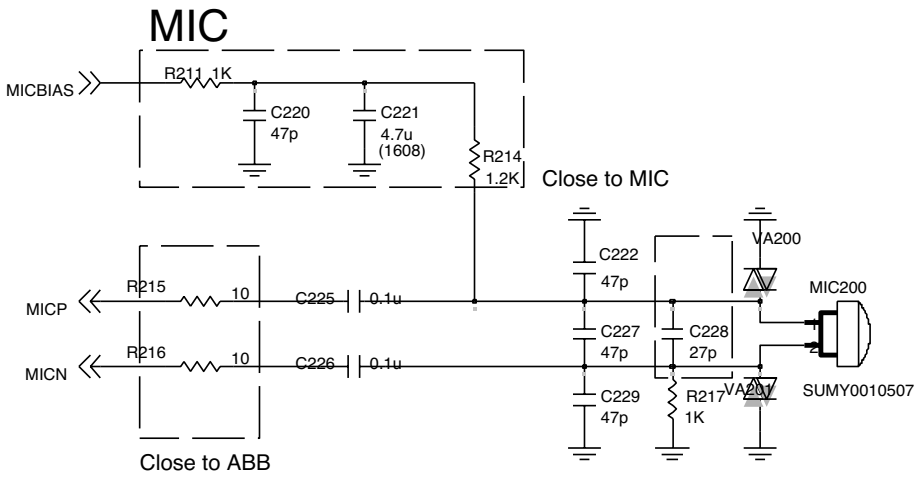

Figure 19. Microphone system

When a call is established, MICBIAS signal goes up to ‘2.5V’ in the MG210. IOTA Shrink(ABB) provid es both 2.0V and 2.5V for MICBIAS to circuit designer. VA200, VA201 are employed to enhance ESD immunity.

Head set Jack Interface

EAR-MIC

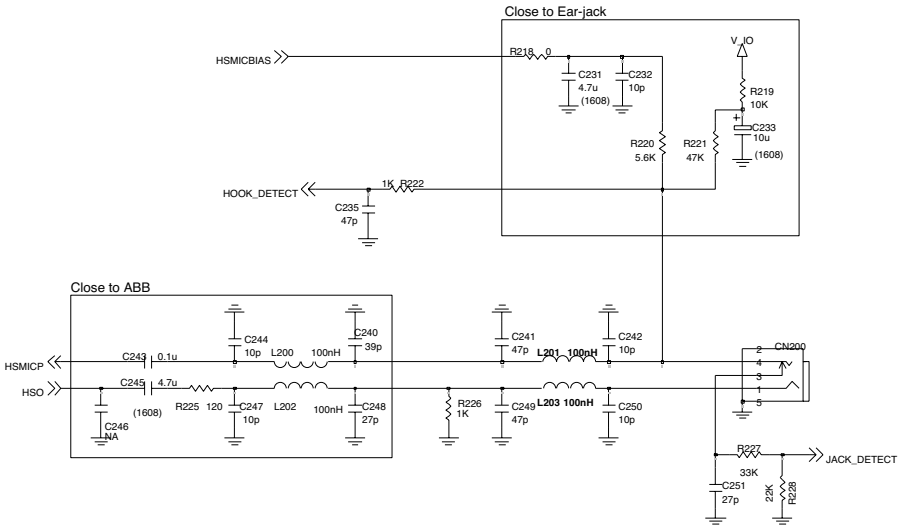

Figure 20. Ear-Jack interface

When ear-mic set or head set plug is inserted into the receptacle, JACK_DETECT signal level which is input of ADIN1 in ABB is changed. If hook button is pushed for a second to make a call, then HOOK_DETECT signal which is input of ADIN4 in ABB goes GND level. Also call end has same mechanism by pushing hook button on the Ear- microphone strap.

Ordinarily detection of pushing hook button is established by signal de-bouncing for about 20ms.

Receiver / Speaker phone Circuits

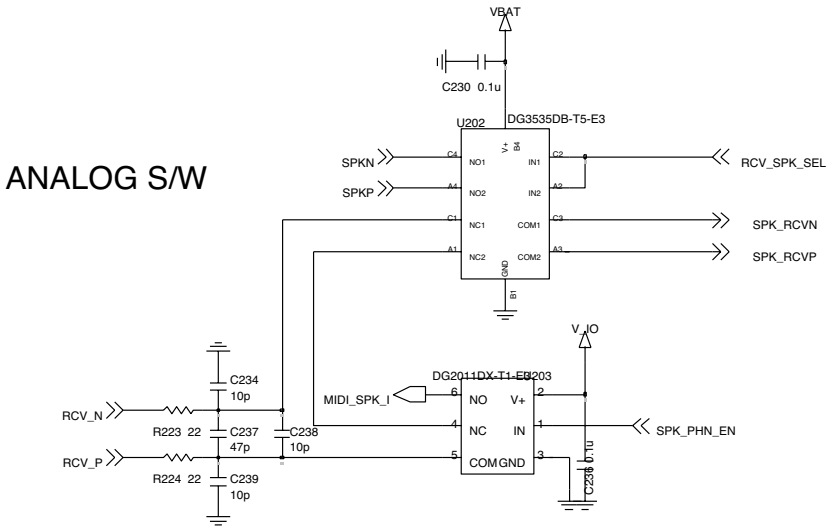

Figure 21. Receiver and Speaker phone mode system switch

A single analog switch is employed to support both voice and speaker Phone mode with RCV_P. In the speaker phone mode the SPK_PHN_EN port sets ‘H’ and RCV_SPK_SEL port sets ‘H’ , then the RCV_P will be connected with MIDI sound path(NO) and operate as loud speaker. The other case, the SPK_PHN_EN port and RCV_SPK_SEL port will remain ‘L’ state and RCV_P will be connected with receiver path.(NC)

MIDI SOUND circuit description

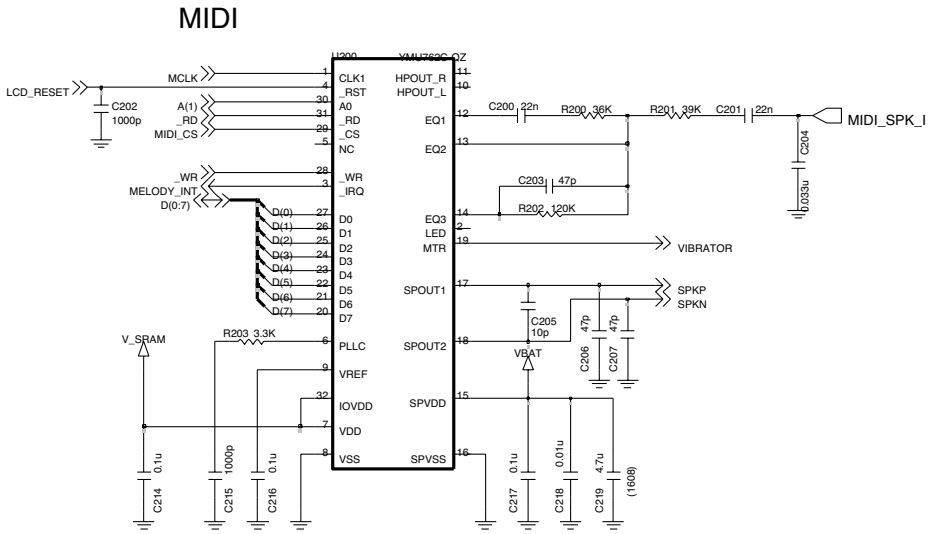

Figure 22. MIDI sound Circuit

The YMU762 has features as described below.

- Simultaneous generation of up to 40 tones:
- Polyphonic synthesizer specification
- Has built-in default tones for FM and Waveform table synthesizers in the ROM, and the tones can be downloaded to RAM.
- Stream replay with ADPCM/PCM
- Software interrupt mechanism for external synchronization
- Equipped with 8 bit parallel I/F for control from CPU
- Equipped with speaker amplifier and equalizer circuit
- Has built-in PLL to support inputting of master clock up to 20 MHz.
- Contains a 16-bit stereophonic D/A converter.

Receiver and Speaker circuit

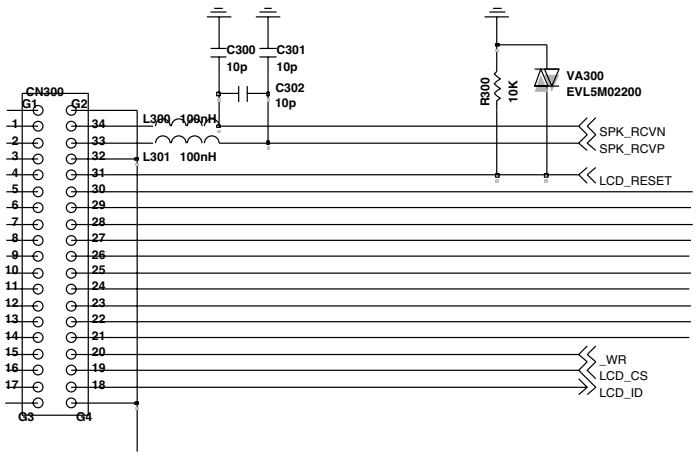

Figure 23. Receiver and Speaker Circuit

SPK_RCVP, SPK_RCVN signals from Analog switch are connected to speaker through SPK+ and SPK-.

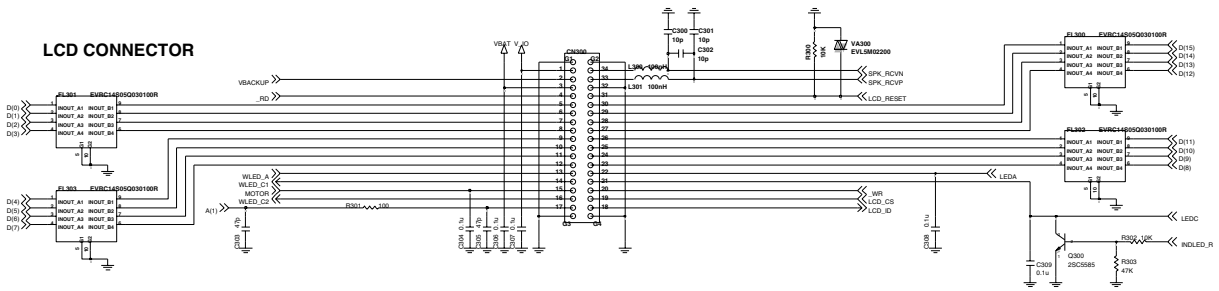

Figure 24. LCD Connection.

4. TROUBLE SHOOTING

4.1 Main Components Placement

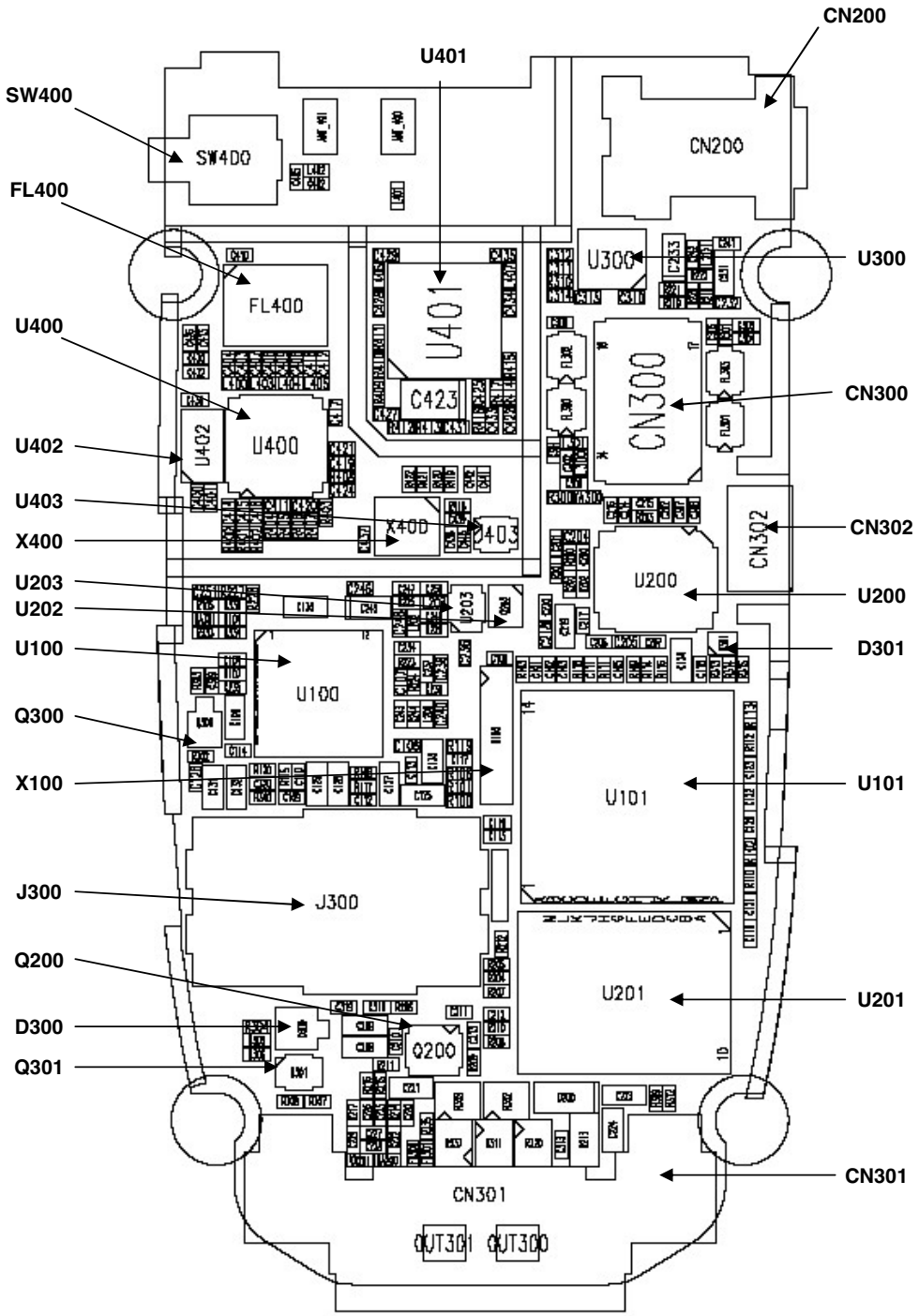

4.2 KEYPAD Components Placement

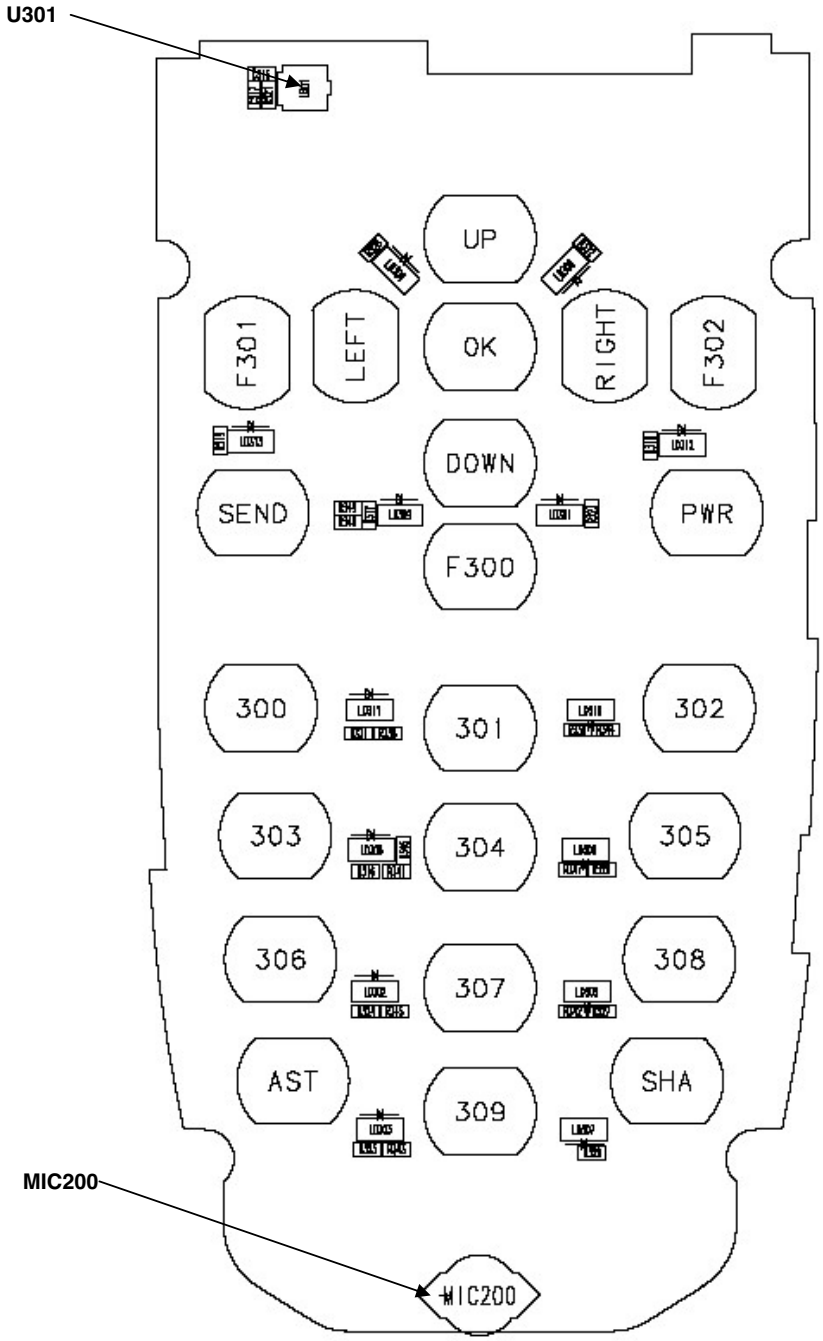

4.3 FPCB Components Placement

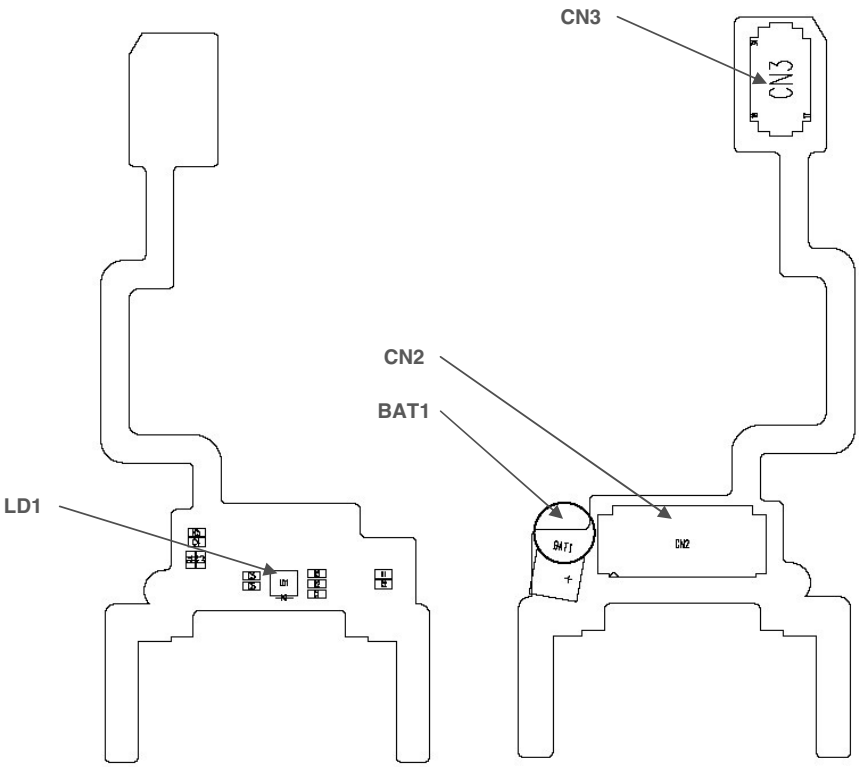

4.4 Baseband Components

4.5 Main Components (Description)

MAIN

U301	Hall effect switch	U402	UHS Triple Buffer
CN300	LCD connector	CN200	Ear-Mic jack
U300	LCD Back Light LED charge pump	MIC200	Microphone
SW400	RF Mobile switch	U400	RF Transceiver
FL400	Quad FEM	U401	Power Amplifier Module
U403	RF LDO	U100	Analog Base Band (IOTA Shrink)
X400	XTAL 26MHz	X100	XTAL 32.768KHz
U200	MIDI chip(40poly)	U203	SPDT Analog switch
U202	DUAL SPDT ANALOG SWITCHES	U101	Digital Base Band(Calypso)
J300	SIM Connector	CN301	I/O connector
U201	Memory(Flash 128Mbit/SRAM 64Mbit)		

FPCB

CN2	Main PCB connector	BAT1	Backup Battery
CN3	LCD connector	LD1	Indicator LED

4.6 Power On Trouble

4.6.1 Power On Sequence

Connecting Battery

- Power-On Key Detection
- PWON signal goes to ABB and then ABB reset DBB by ON_OFF signal
- ON_OFF turn low(1.5V) to HIGH(2.8V) and it resets Calypso

4.6.2 Check Points

- Battery Voltage
- Power-On Key Detection (PWON signal)
- Outputs of LDOs

4.6.3 Trouble Shooting Setup

- Connect PIF-UNION to the phone
- Set the TI-remote switch PIF-UNION off

4.6.4 Trouble Shooting Procedure

- Check Battery voltage
- END_KEY Dome Switch condition
- Check the output voltages of all LDOs

4.7 Charging Trouble

- Charging method : CC-CV
- Charger detect voltage : about 5.2V
- Charging time : under 3hours
- Charging current : about 500mA
- Cutoff current : about 50mA
- Low battery alarm
  - Idle : 3.50V
  - Dedicated : 3.61V
- Switch-off voltage : 3.35V
- Charging temperature adc range
  - ~ -5°C : charging.
  - -5°C ~ 50°C : charging.
  - 50°C ~ : not charging operation.

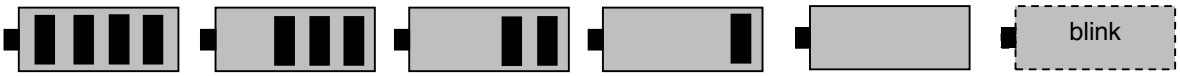

4.2V~3.92V **3.91V~3.78V** **3.77~3.70V** **3.69V~3.62V** **3.61V~3.51V** **3.50V~3.35V**

Block Diagram

Charging Current

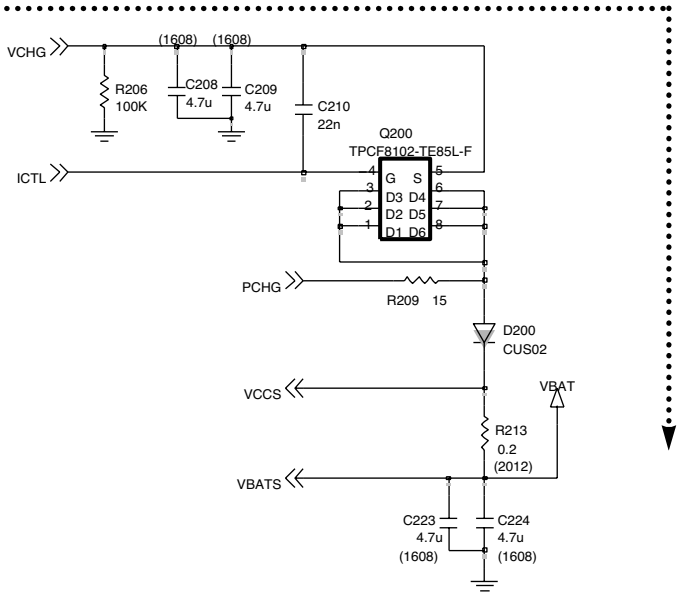

Charging Procedure

- Connecting TA & Charger Detection
- Control the charging Current by ABB
- Charging Current flows into the Battery

Check Points

- Connection of TA
- Charging Current Path
- Battery

Trouble Shooting Setup

- Connect Battery & TA to the handset.

Trouble Shooting Procedure

- Check the charger connector.
- Check the charging current path.
- Check the battery

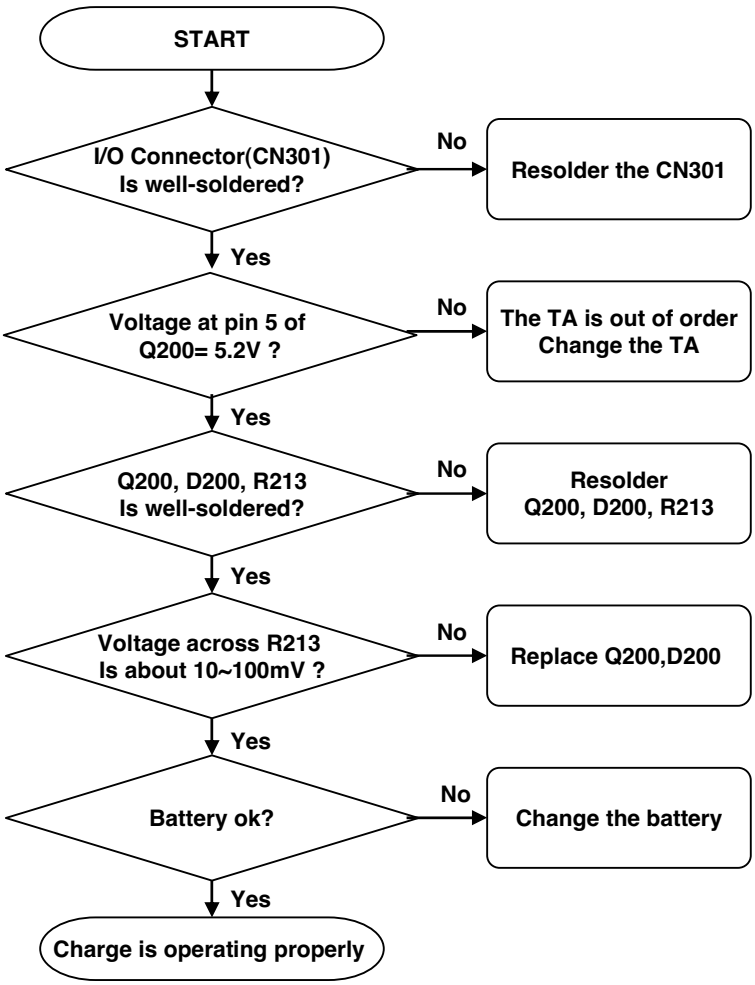

4.8 LCD Display Trouble

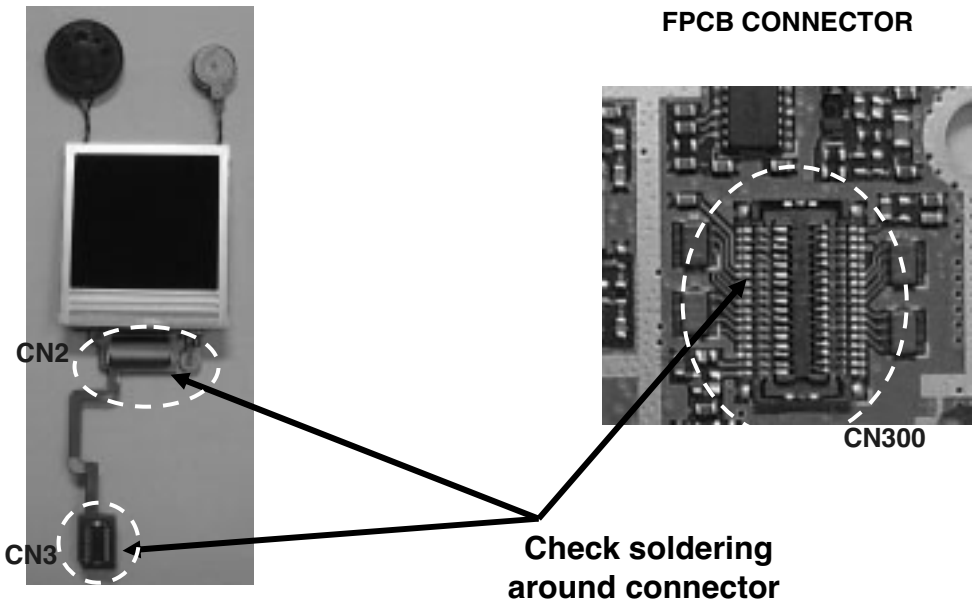

-FPCB CONNECTOR
-LCD CONNECTOR

LCD Control Signals From Main Board
- WLED_A, WLED_C1, WLED_C2, LCD_CS, LCD_RESET, _WR, RD, LCD_ID
- A(1), D(0)~D(15)

Check Points
- The Assembly status of the LCD Module.
- The Soldering of connectors
- The FPCB which connects the LCD module with the main board.

Trouble Shooting Setup
- Connect PIF, and power on

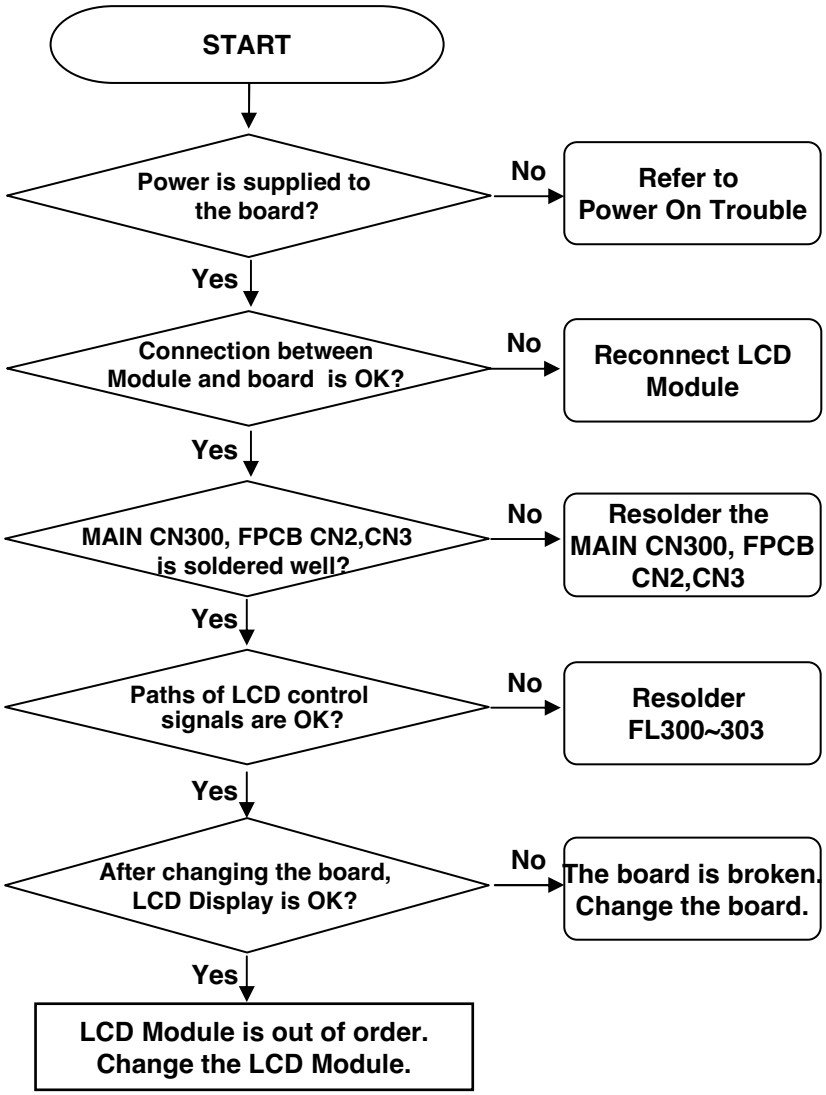
START
Power is supplied to the board?
No
Refer to Power On Trouble
Yes
Connection between Module and board is OK?
No
Reconnect LCD Module
Yes
MAIN CN300, FPCB CN2,CN3 is soldered well?
No
Resolder the MAIN CN300, FPCB CN2,CN3
Yes
Paths of LCD control signals are OK?
No
Resolder FL300~303
Yes
After changing the board, LCD Display is OK?
No
The board is broken. Change the board.
Yes
LCD Module is out of order. Change the LCD Module.

4.9 Receiver Trouble

Block Diagram

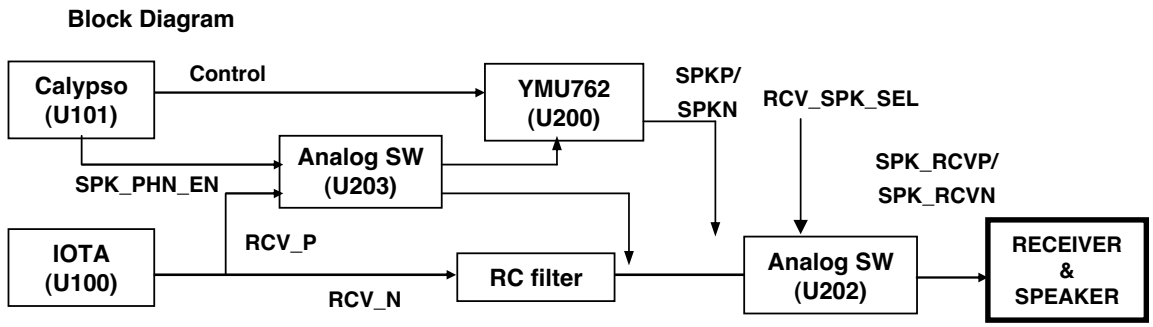

Melody Generation

- U200(YMU762,MIDI) is controlled by DBB.
- U200 generates 40poly MIDI sound and it is delivered to the speaker
- When RCV_SPK_SEL and SPK_PHN_EN are ‘H’, RCV_P from U100 is delivered to the speaker through U200

Signals to the receiver

- RCV_P,RCV_N From ABB
- RCV_N, RCV_P are delivered to Receiver, when RCV_SPK_SEL and SPK_PHN_EN are ‘L’.

Check Points

- Audio signals from ABB
- Audio signals to the receiver
- Audio signal path
- Check the sound level to the speaker.
- Soldering of connectors, speaker and receiver
- Speaker
- Receiver

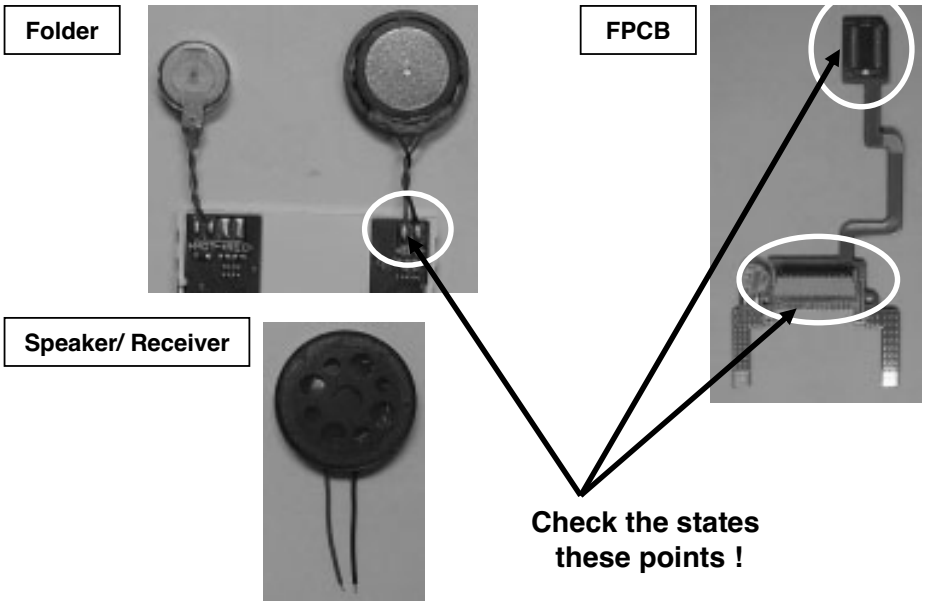

Receiver Trouble Shooting Setup

- Initialize GSM MS test equipment.
- Connect PIF-UNION and power on.
- Make a test call to 112.
- Set audio part at test equipment as PRBS or continuous wave, not echo.
- Set the audio volume max.

Trouble shooting Procedure

- Check the audio signal levels at each point.
- Check the soldering of the connector.
- Check the soldering of the receiver.
- Check the receiver.
- Check receiver cable states.

Speaker Trouble Shooting Setup

- Connect PIF to the phone, and power on.
- Enter the engineering mode, and go to menu
  "Baseband → Alert → Ring"

Trouble Shooting Procedure

- Check the voltage levels of power supplies.
- Check all sound path.
- Check the sound level to the speaker.
- Check the speaker and the soldering.

4.9.1. Receiver Trouble

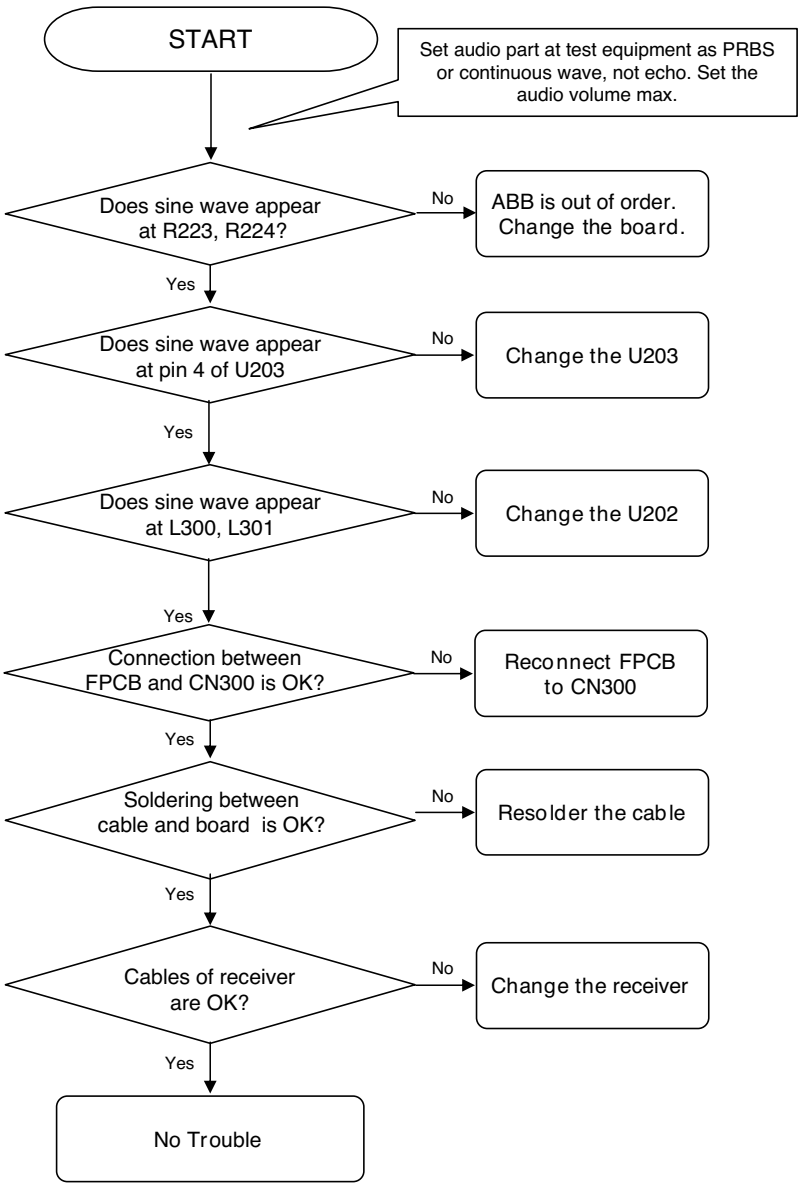

4.9.2. Speaker Trouble

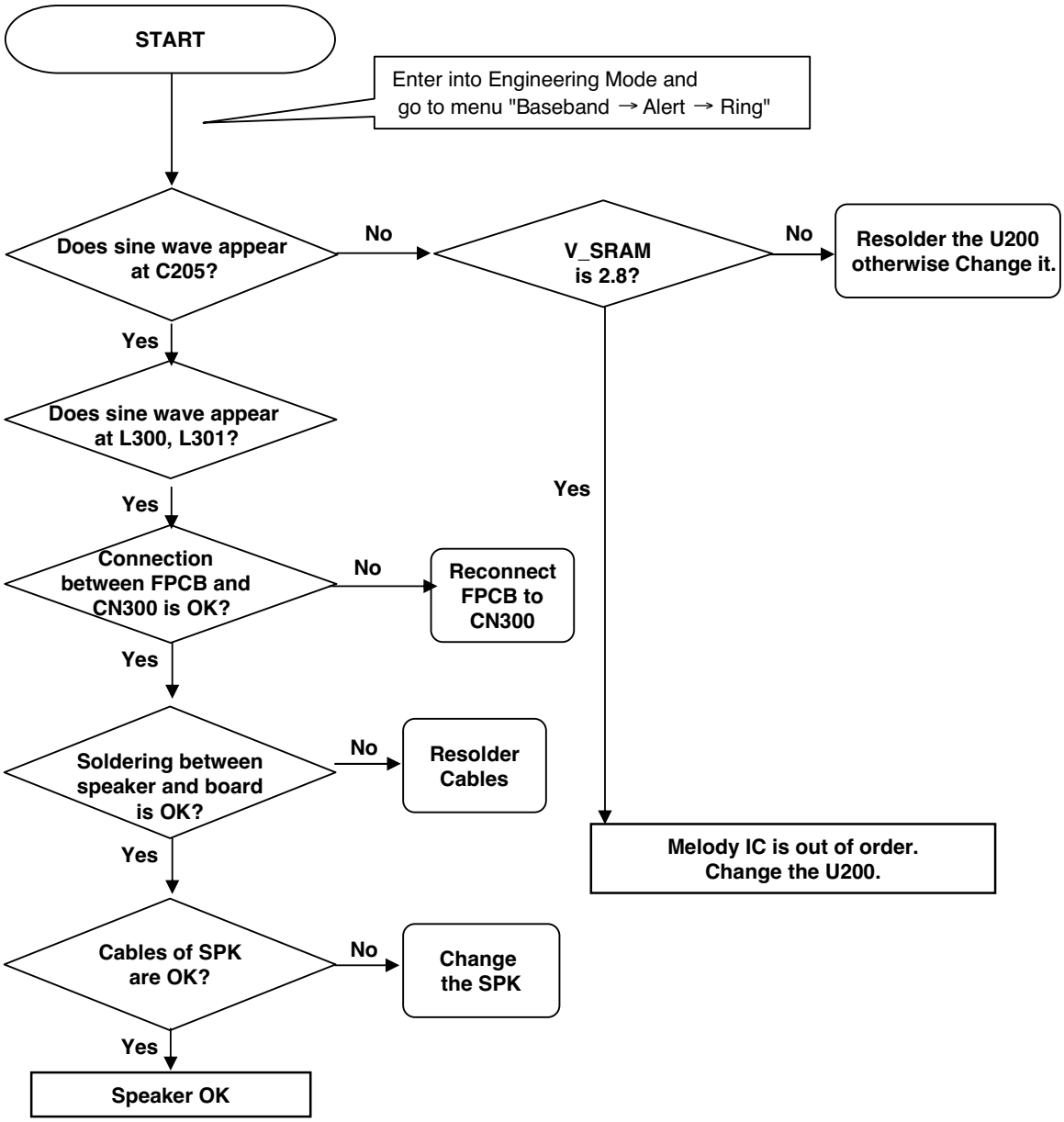

4.10 Microphone Trouble

Circuit Diagram

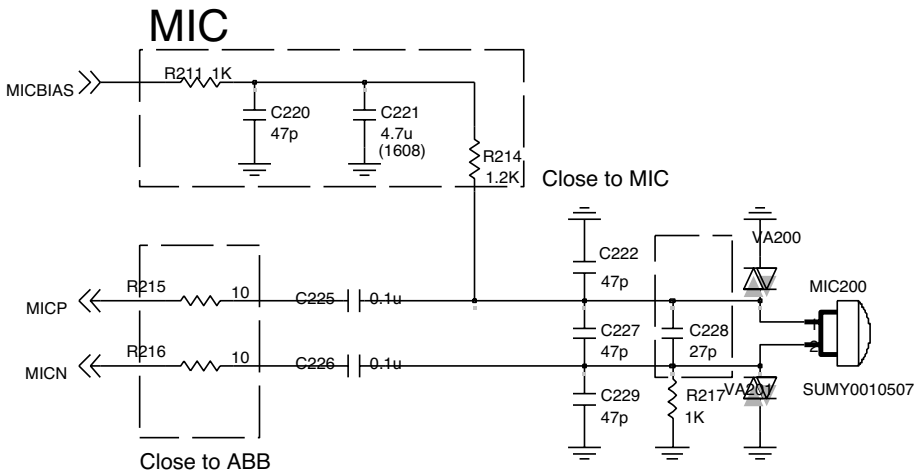

Microphone Signal Flow

- MIC is enable by MICBIAS
- MICBIAS, MICP, MICN signals to ABB

Trouble Shooting Setup

- Initialize GSM MS test equipment.
- Connect PIF-UNION to the phone, and power on.
- Make a test call to 112.
- Make a sound in front of the microphone

Check Points

- Microphone bias
- Audio signal level of the microphone
- Soldering of components

Trouble Shooting Procedure

- Check the bias of the microphone.
- Check the audio signal path.
- Check the soldering.
- Check the microphone.
- Check the operation of FPCB

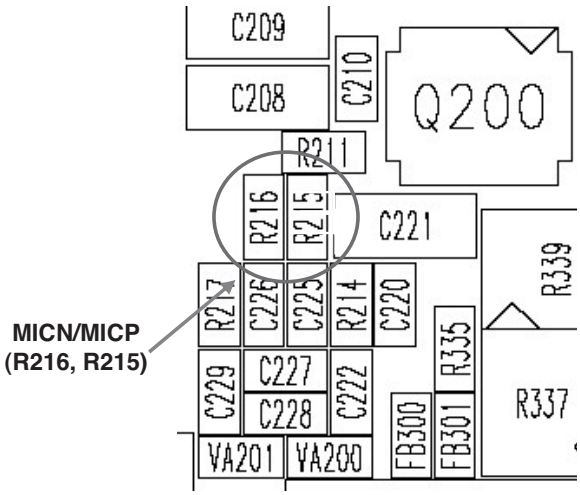

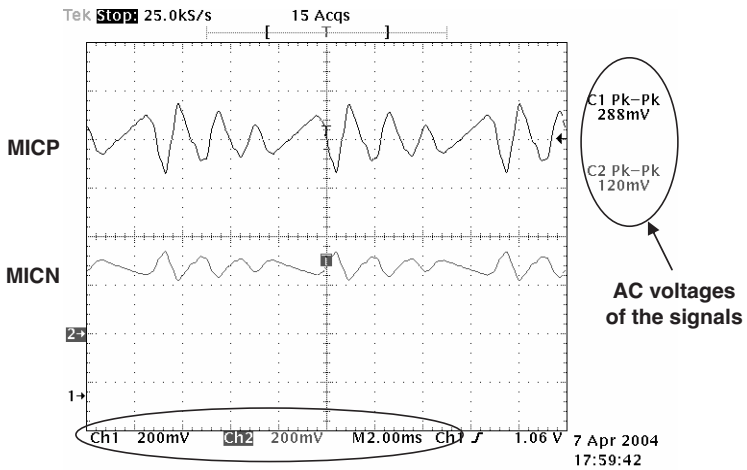

The waveforms at MICP and MICN

4. TROUBLE SHOOTING

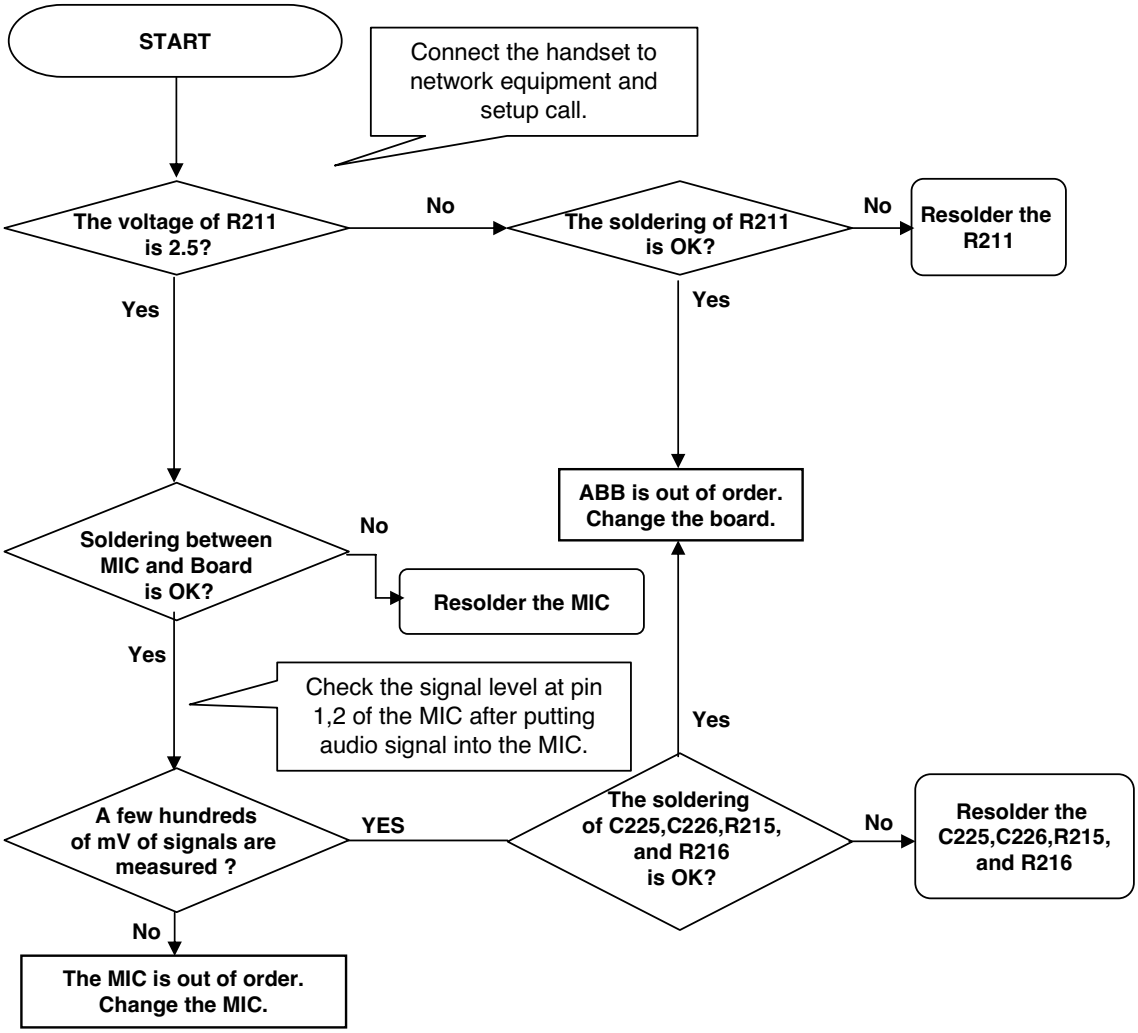

4.11 Vibrator Trouble

Block Diagram

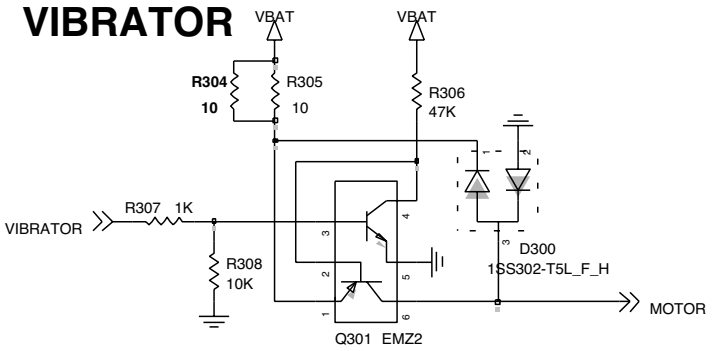

Vibrator Operation

- Vibrator is controlled by MIDI chip
- When vibrator signal is high, vibrator is enabled

Check Points

- VDD lines (V_SRAM) of MIDI chip
- Vibrator signal path
- The connection between the main board and vibrator module
- The soldering of wire

Trouble Shooting Setup

- Connect PIF to the phone, and power on.
- Enter the engineering mode.
- Go to menu “Baseband → Alert → Vibrator”

Trouble Shooting Procedure

- Check vibrator signal
- Check soldering of components
- Check connection of wire

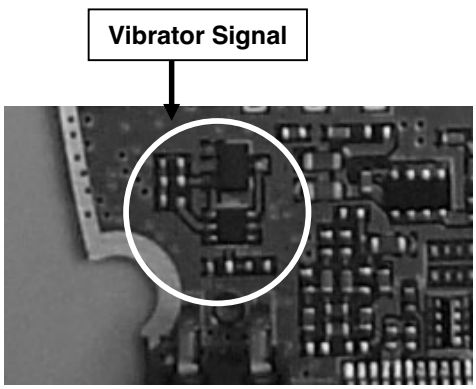

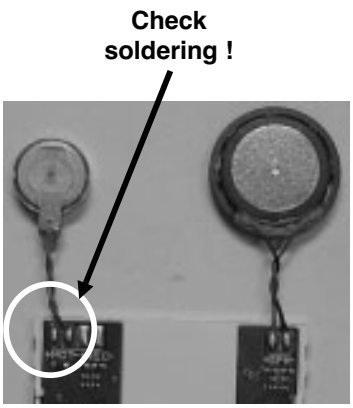

4. TROUBLE SHOOTING

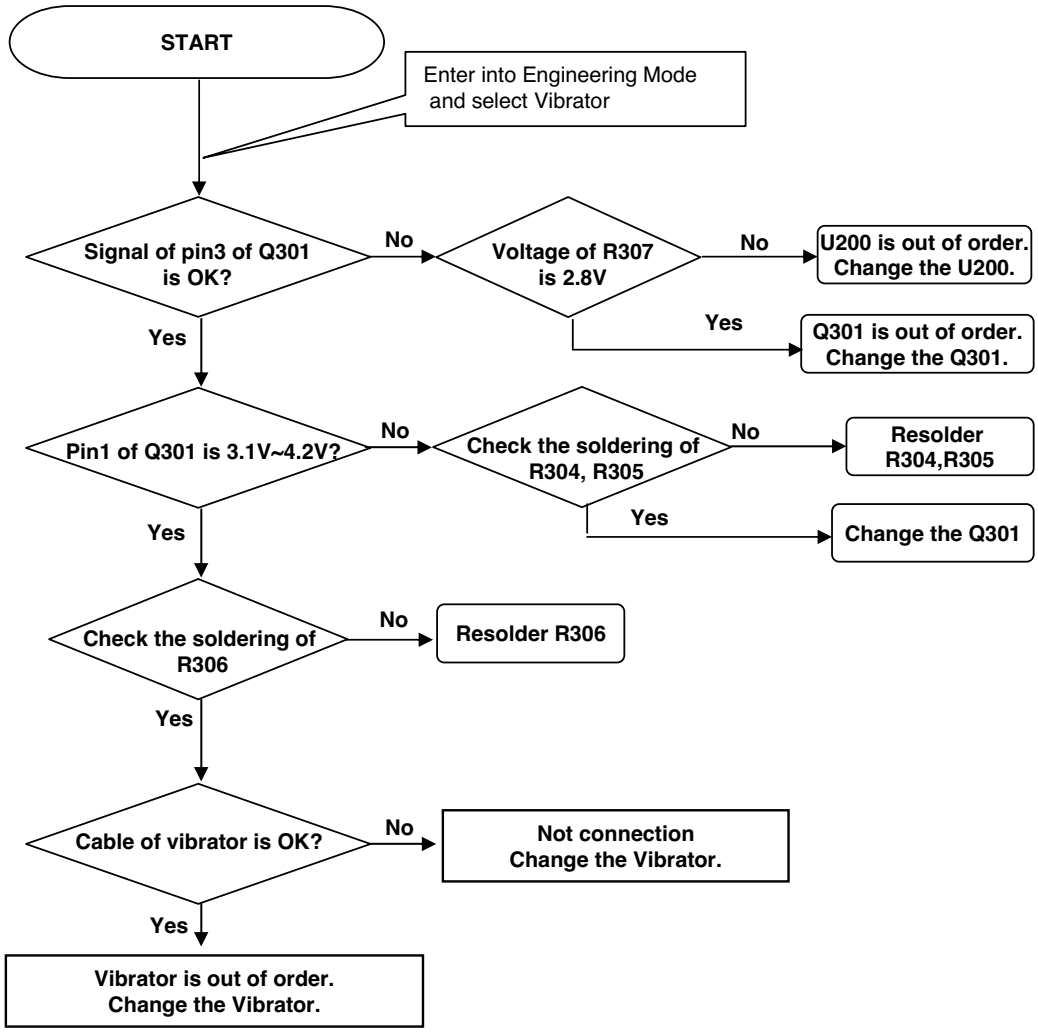

4.12 Keypad Backlight Trouble

Block Diagram

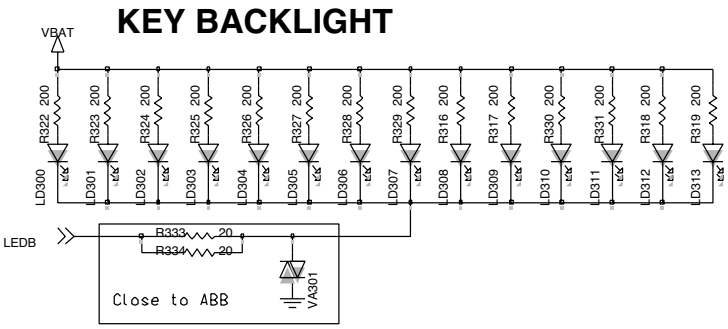

Backlight Operation

- The keypad LED backlight is controlled with LEDB signal.
- LEDB signal from ABB.
- The LEDs are forward biased and turned on.

Trouble Shooting Setup

- Connect PIF-UNION to the phone, and power on.
- Enter the engineering mode.
- Go to menu. “Baseband → LED → Backlight → Keypad on”

Trouble Shooting Procedure

- Check the soldering of components
- Check the LEDB signal
- Check LEDs

Check Points

- LEDB signal
- LEDs

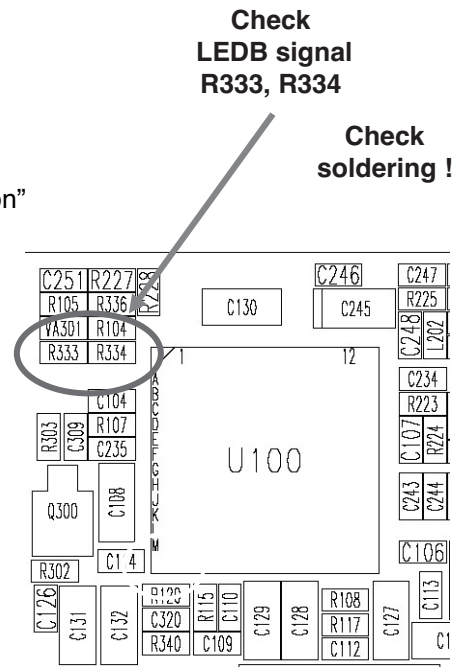

4. TROUBLE SHOOTING

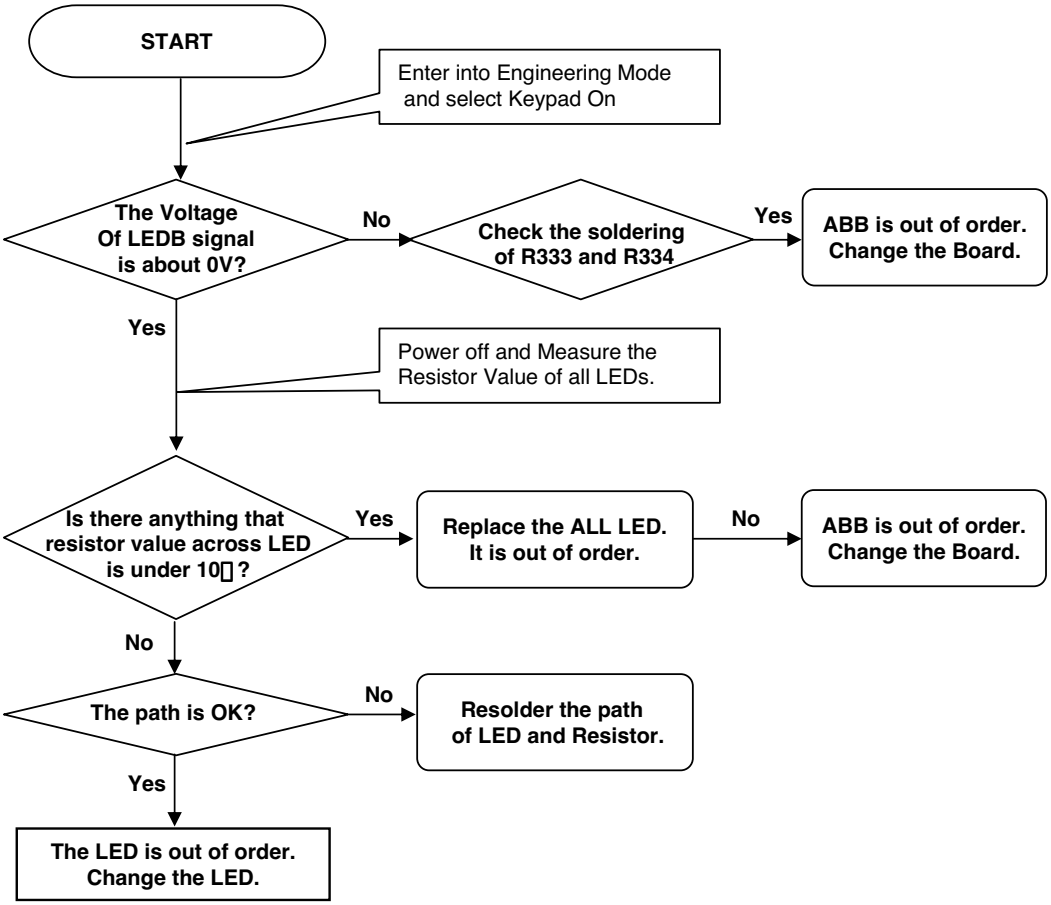

4.13 FOLDER Open/Close Trouble

Block Diagram

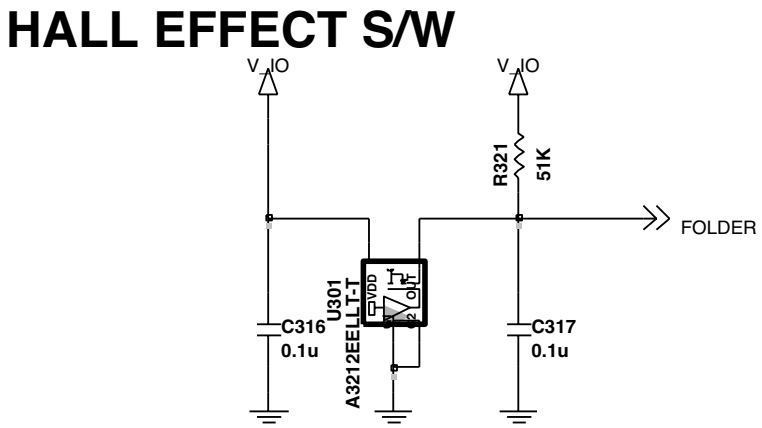

Folder Operation

- There is a magnet to detect the Flip status, opened or closed.
- If a magnet is close to the hall-effect switch(U301), the voltage at pin 2 of U301 goes to 0V. Otherwise, V_IO.
- This Folder signal is delivered to DBB, and the status of Flip is reported.

Folder Signal Status

- L : Close (Magnetized)
- H : Open (Not magnetized)

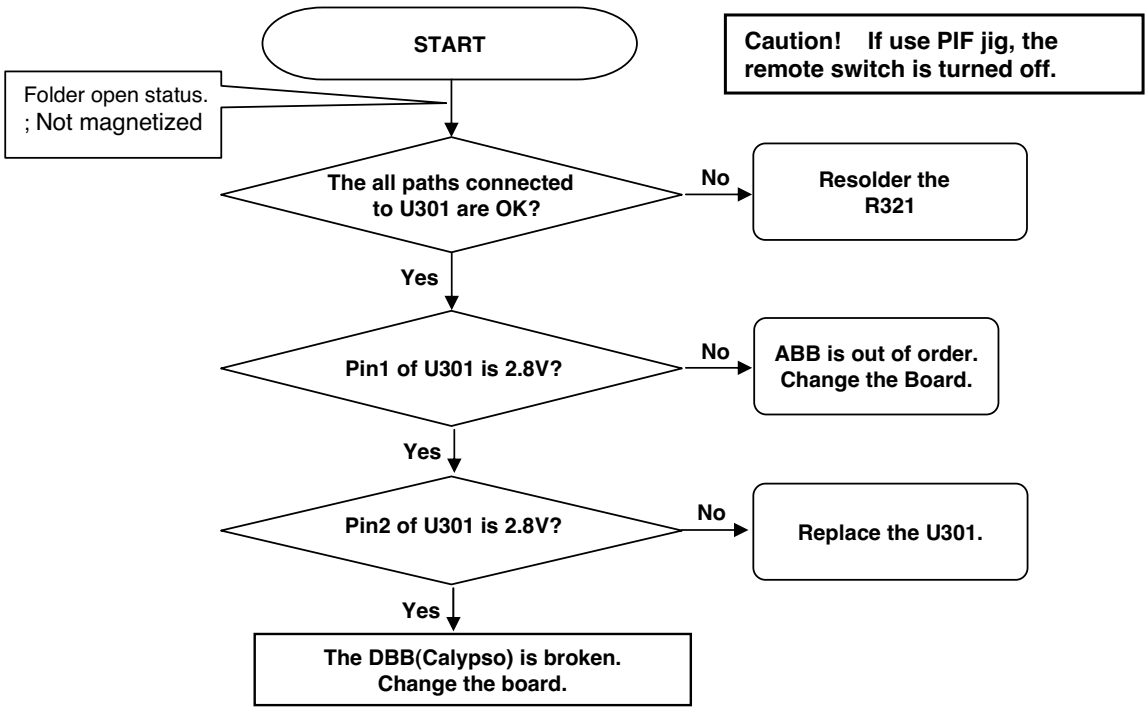
START
Caution! If use PIF jig, the remote switch is turned off.
Folder open status.
; Not magnetized
The all paths connected to U301 are OK?
No
Resolder the R321
Yes
Pin1 of U301 is 2.8V?
No
ABB is out of order. Change the Board.
Yes
Pin2 of U301 is 2.8V?
No
Replace the U301.
Yes
The DBB(Calypso) is broken. Change the board.

4.14 SIM Detect Trouble

Block Diagram

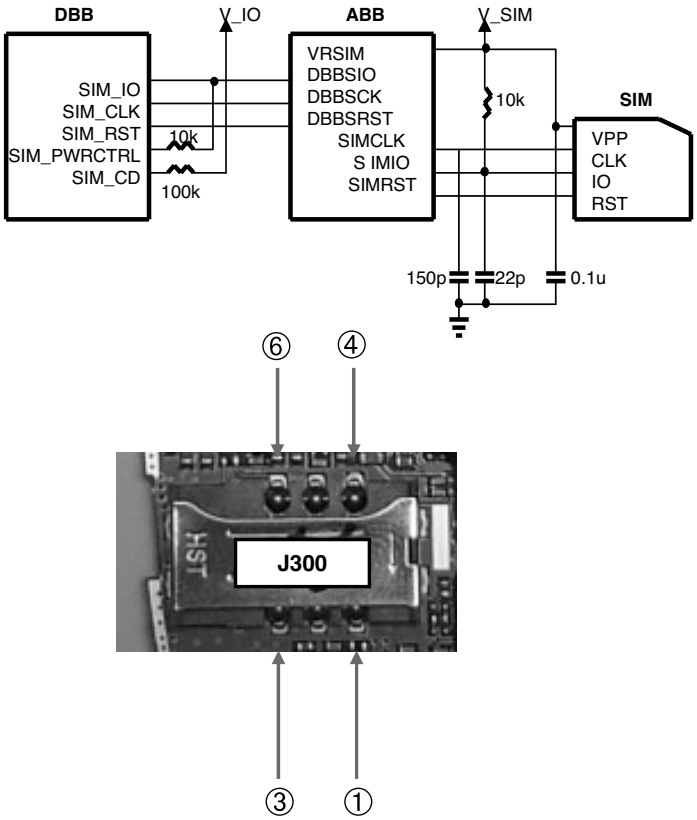

Connection between SIM and DBB

- SIM_CLK, SIM_IO, SIM_RST

Check Points

- Contact between SIM and socket
  - Soldering of SIM socket

Trouble Shooting Setup

- Insert the SIM into socket
  - Connect PIF to the phone, and power on.

Trouble Shooting Procedure

- Check the power supply.
  - Check the soldering of SIM socket.
  - Check the SIM.

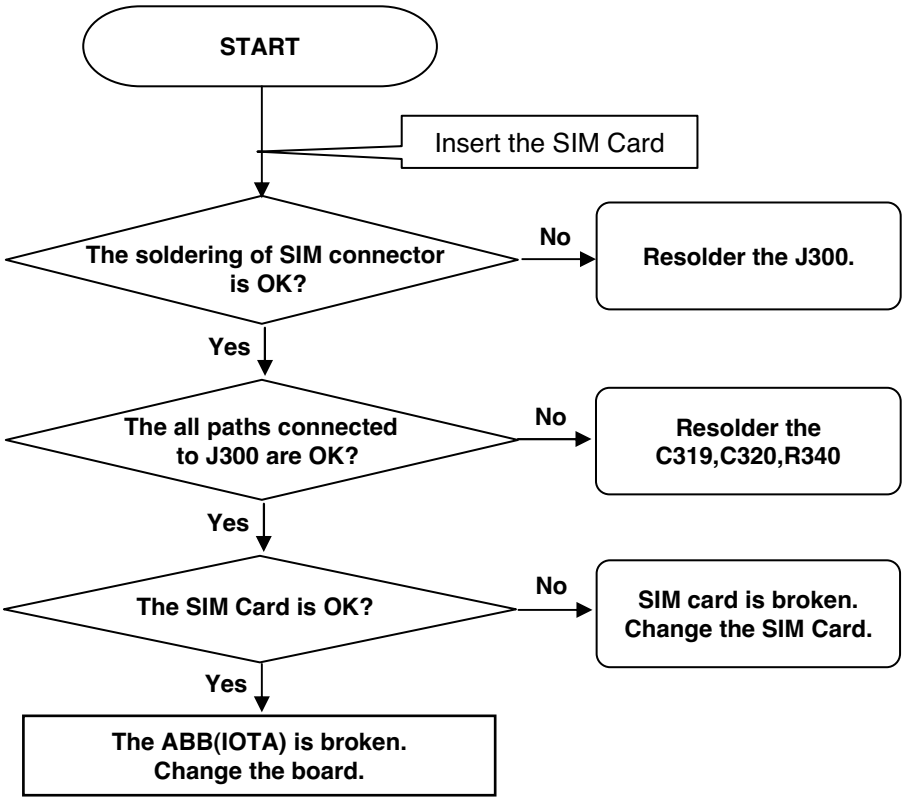
START
Insert the SIM Card
The soldering of SIM connector is OK?
No
Resolder the J300.
Yes
The all paths connected to J300 are OK?
No
Resolder the C319,C320,R340
Yes
The SIM Card is OK?
No
SIM card is broken. Change the SIM Card.
Yes
The ABB(IOTA) is broken. Change the board.

4.15 Earphone Trouble

Block Diagram

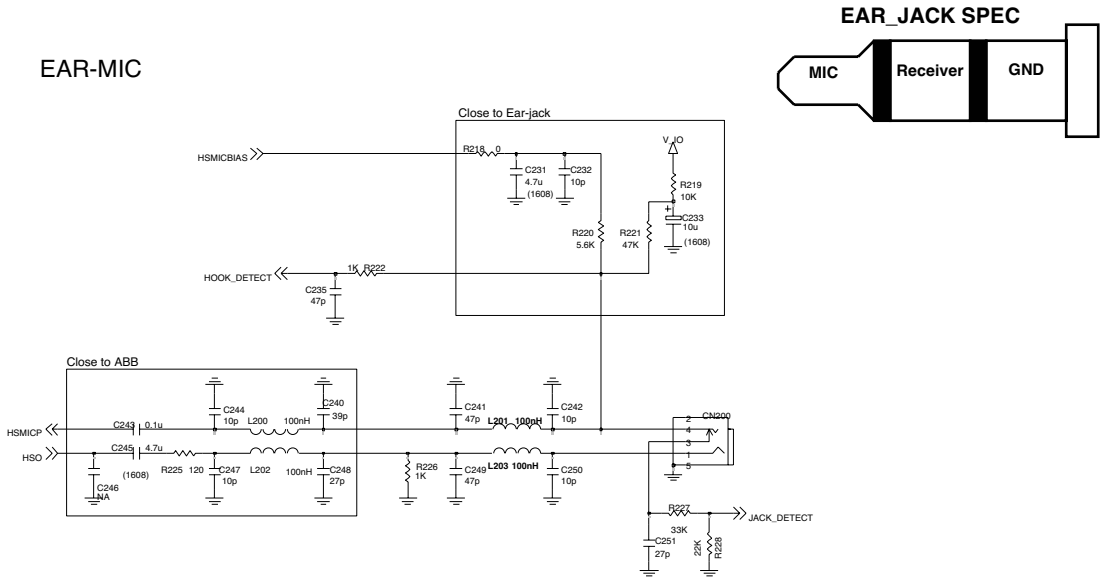

Earphone Detecting Operation

- The ABB operates A/D conversion continuously and if the voltage of “JACK_DETECT” node goes to 0V and the voltage at “HOOK_DETECT” 0.02V to 0.25V, it detects ear-jack inserted.
- The ABB operates A/D conversion continuously and if the voltage of “HOOK_DETECT” node goes to 0V, it detects hook switch is pushed.

Earphone Sending Path

- HSMICP is the audio signal from the microphone of the earphone.
- C243, L200 and L201 make the path of the audio signal from the microphone of the earphone.
- This audio signal is delivered to ABB(IOTA Shrink).

Earphone Receiving Path

- HSO is the audio signal from ABB(IOTA Shrink)).
- C245, R225, L202, and L203 make the path of the audio signal from ABB to earphone.

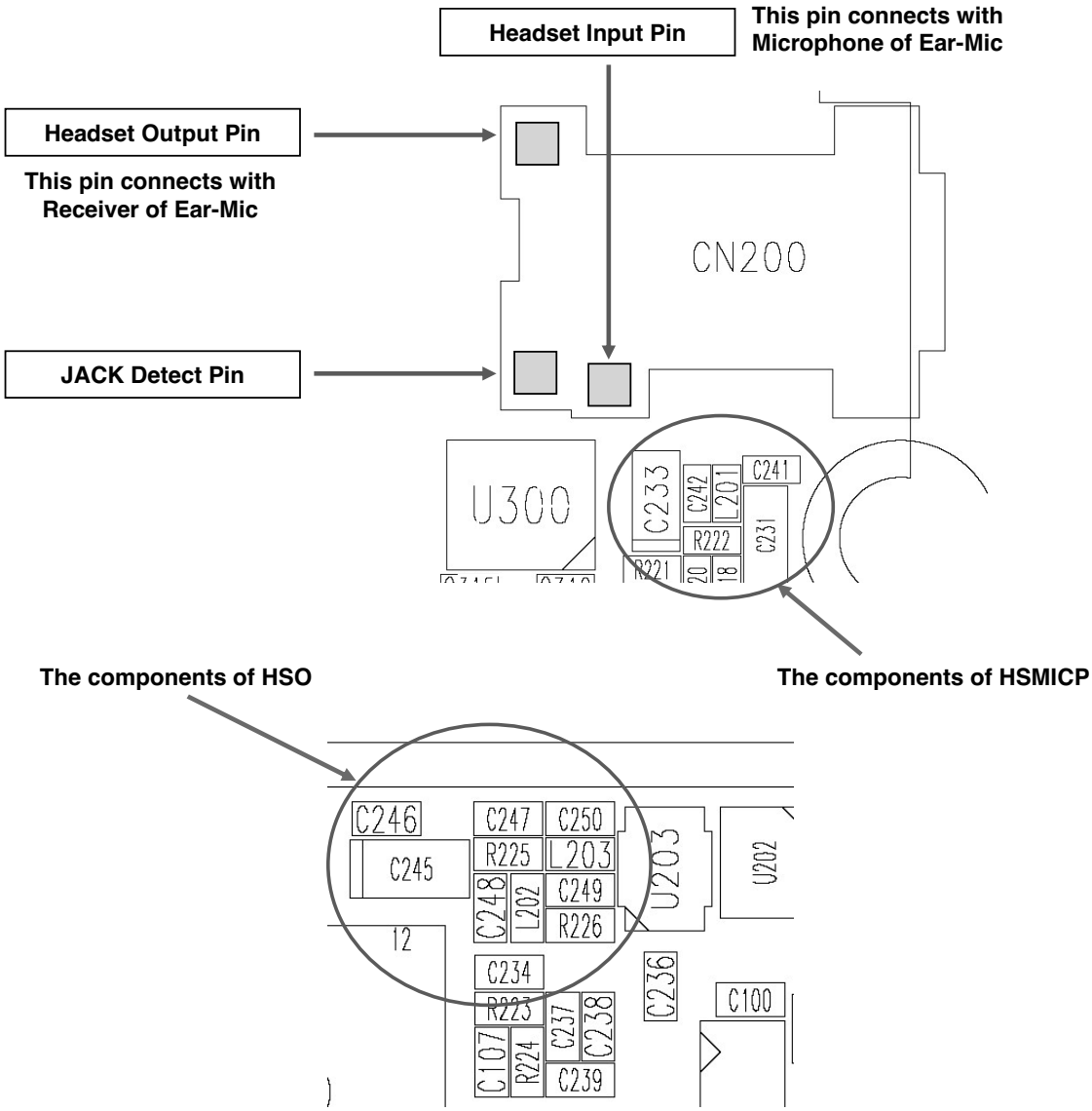
Headset Input Pin
This pin connects with Microphone of Ear-Mic
Headset Output Pin
This pin connects with Receiver of Ear-Mic
JACK Detect Pin
CN200
U300
C233
C242
L201
C241
R222
C231
R221
20
18
The components of HSO
The components of HSMICP
C246
C245
C247
R225
C248
L202
C250
L203
C249
R226
U203
U202
12
C234
R223
C107
R224
C237
C238
C239
C236
C100

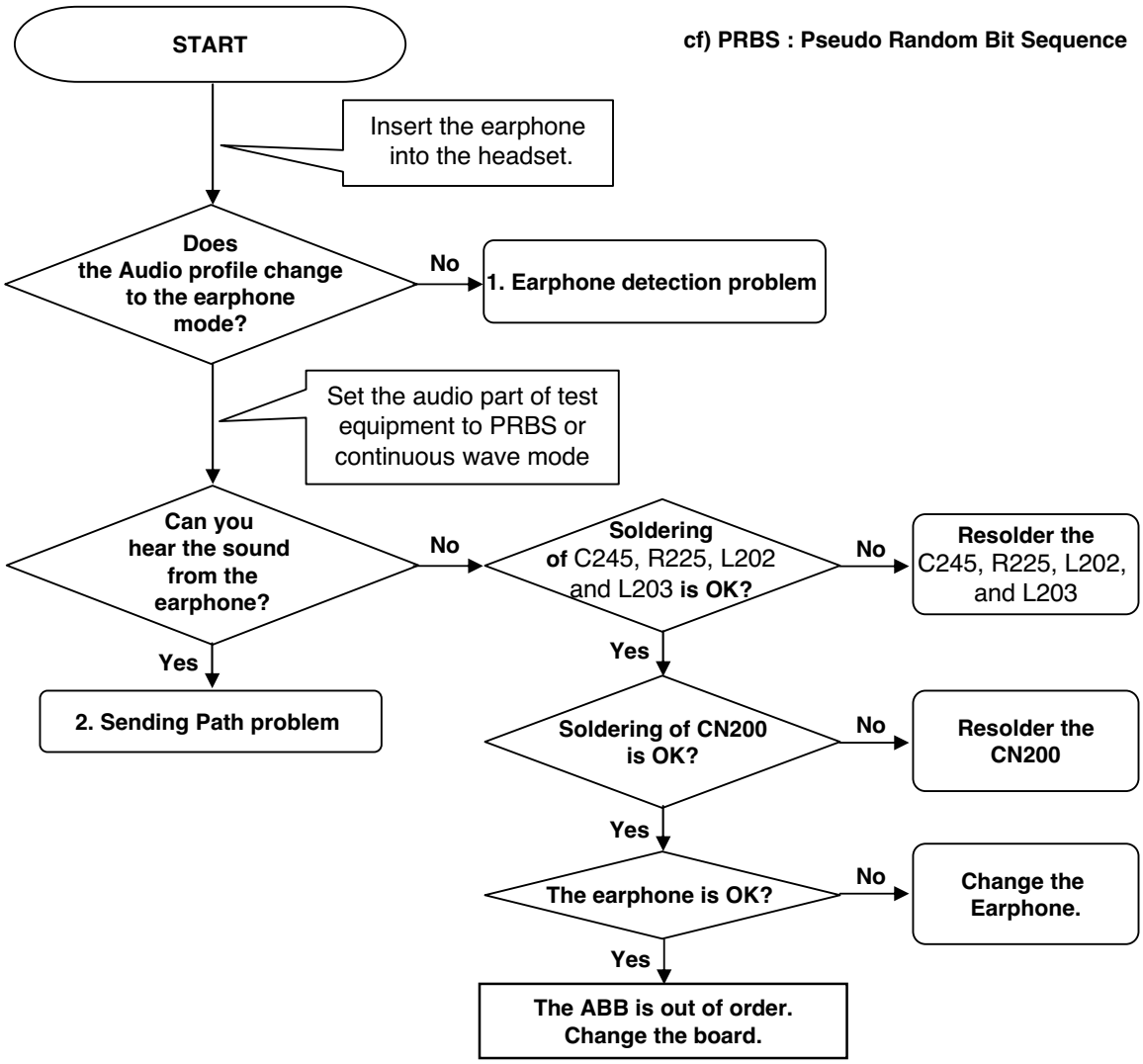
START
cf) PRBS : Pseudo Random Bit Sequence
Insert the earphone into the headset.
Does the Audio profile change to the earphone mode?
No
1. Earphone detection problem
Set the audio part of test equipment to PRBS or continuous wave mode
Can you hear the sound from the earphone?
No
Soldering of C245, R225, L202 and L203 is OK?
No
Resolder the C245, R225, L202, and L203
Yes
2. Sending Path problem
Yes
Soldering of CN200 is OK?
No
Resolder the CN200
Yes
The earphone is OK?
No
Change the Earphone.
Yes
The ABB is out of order. Change the board.

4. TROUBLE SHOOTING

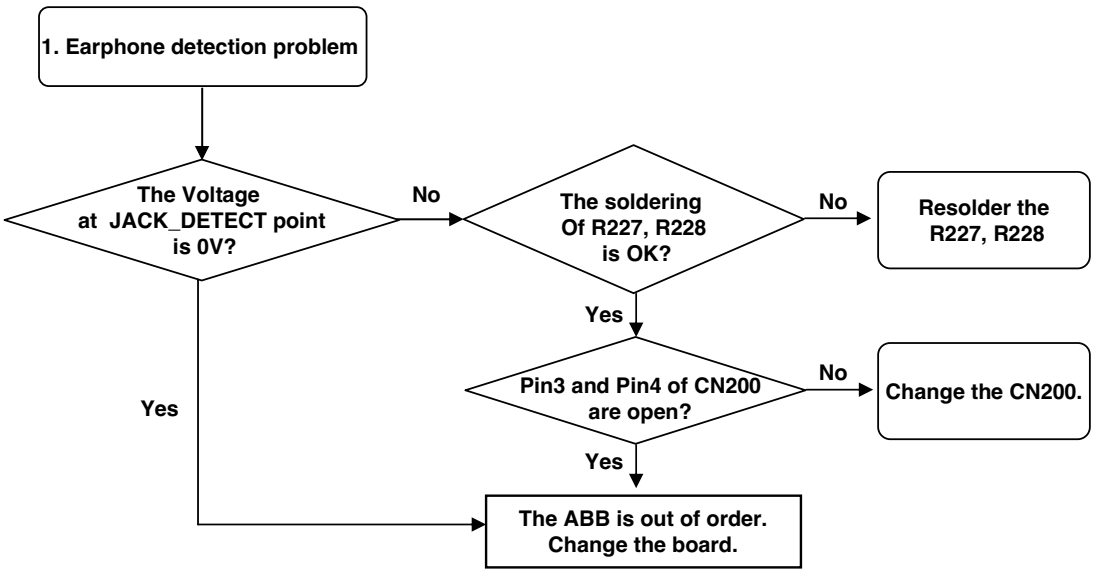

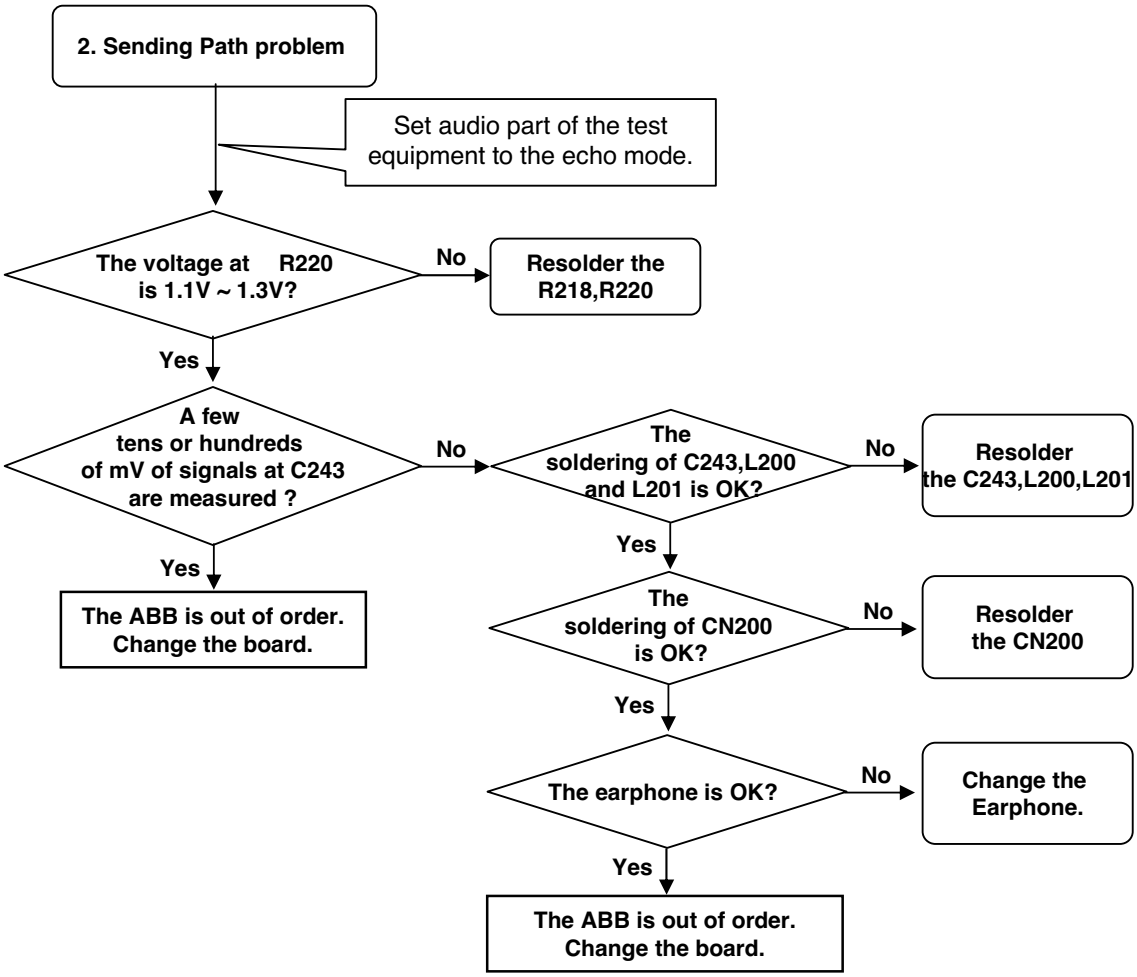
2. Sending Path problem
Set audio part of the test equipment to the echo mode.
The voltage at R220 is 1.1V ~ 1.3V?
No
Resolder the R218,R220
Yes
A few tens or hundreds of mV of signals at C243 are measured ?
No
The soldering of C243,L200 and L201 is OK?
No
Resolder the C243,L200,L201
Yes
Yes
The ABB is out of order. Change the board.
The soldering of CN200 is OK?
No
Resolder the CN200
Yes
The earphone is OK?
No
Change the Earphone.
Yes
The ABB is out of order. Change the board.

4.16 RF Part Troubleshooting

RF Components

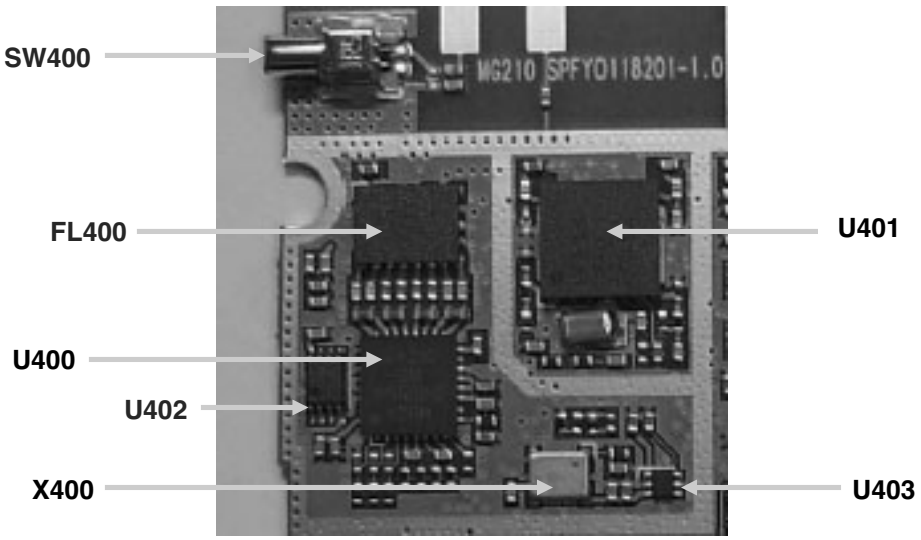

Figure 8. RF Components

Reference	Description	Reference	Description
SW400	Mobile S/W	U403	LDO(Voltage Regulator)
FL400	FEM	X400	VCTCXO(26MHz)
U402	Triple Buffer	U401	PAM
U400	RF Main Chip		

Table . RF Components

Trouble Shooting of Receiver Part

Checking Flow

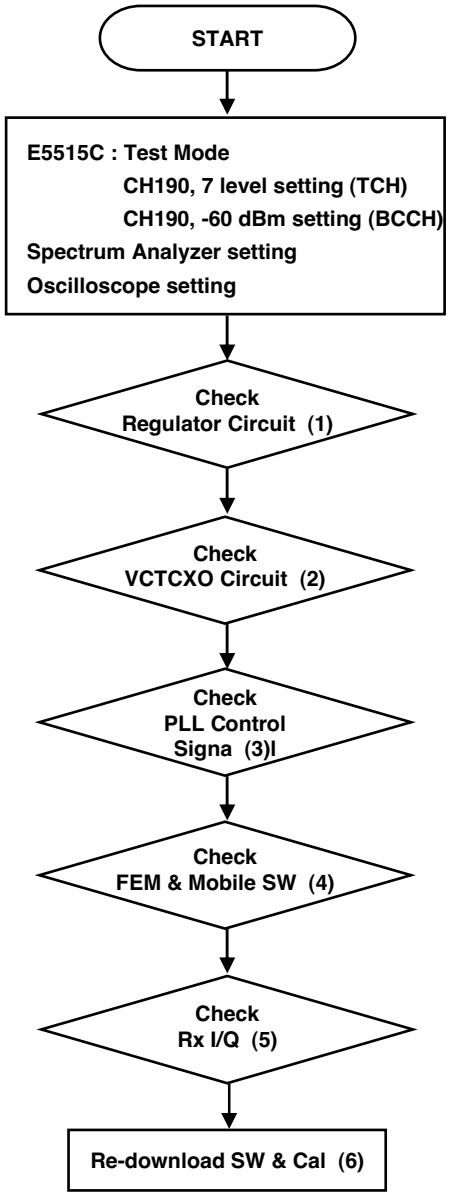

Checking Points

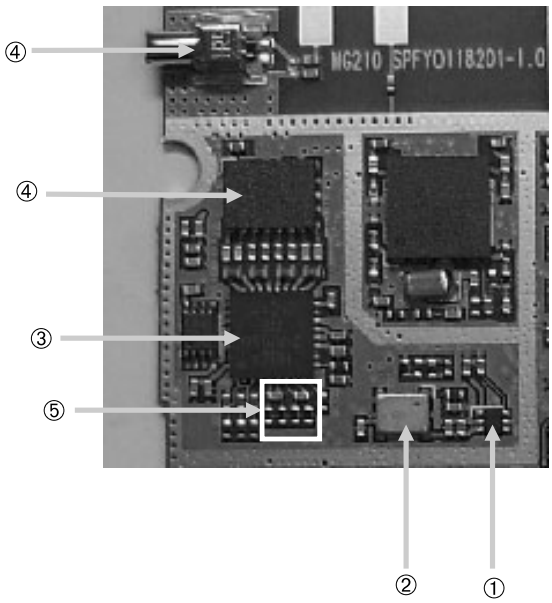

Figure . RF BLOCK

Checking Regulator Circuit (Rx pass continued)

Checking Points

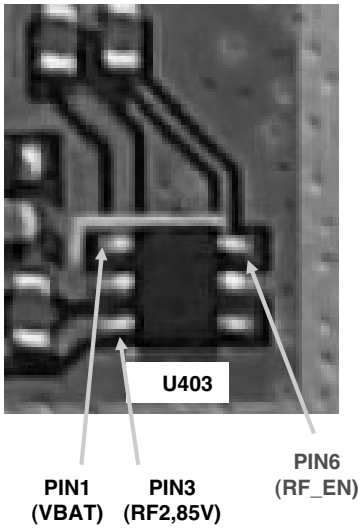

Checking Flow

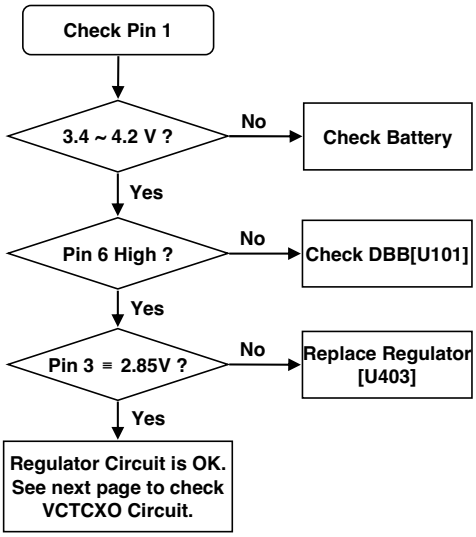

LDO Circuit Diagram

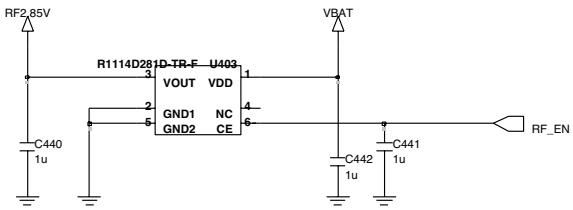

Waveform

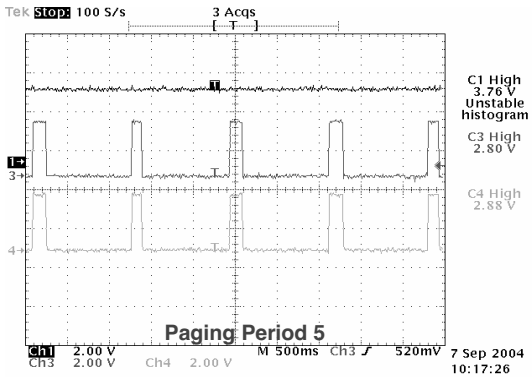

Checking VCTCXO Circuit (Rx pass continued)

Checking Points

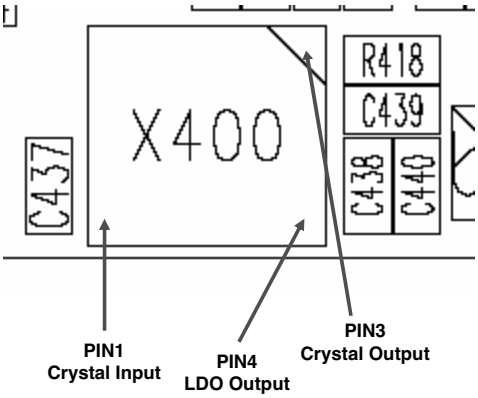

Checking Flow

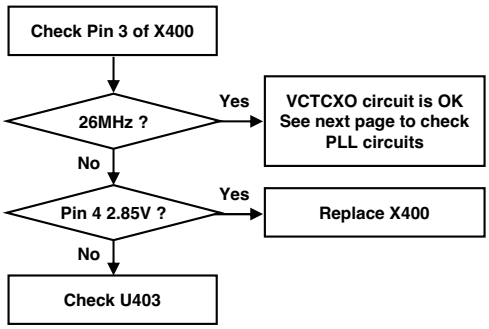

VCTCXO Circuit Diagram

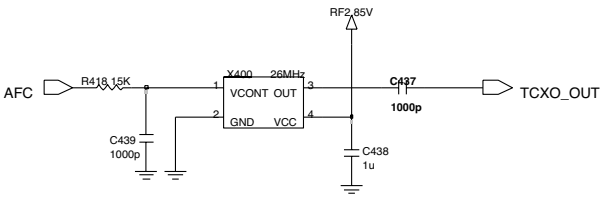

Waveform

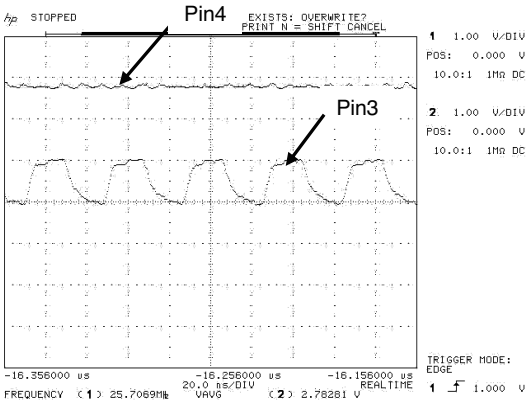

Checking PLL Circuit (Rx pass continued)

Checking Points

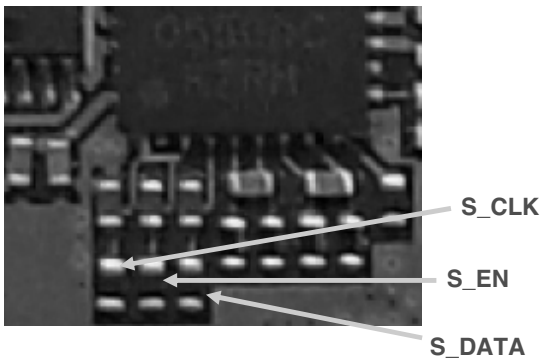

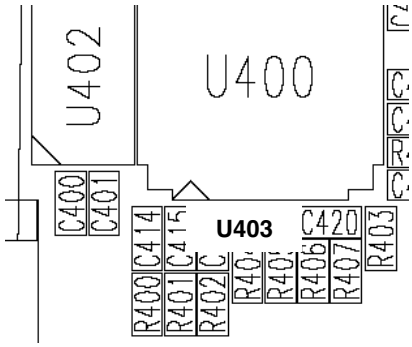

Checking Flow

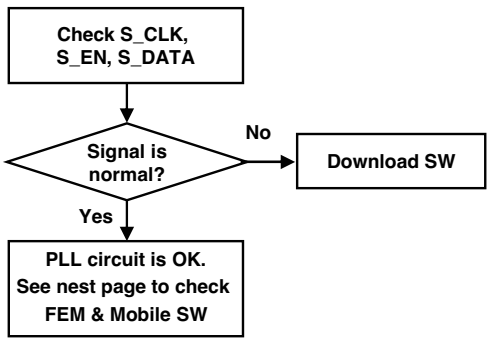

Control Signal Circuit Diagram

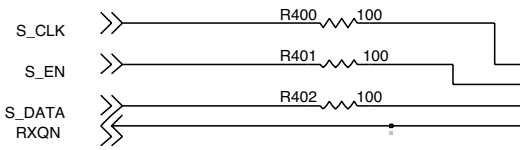

Waveform

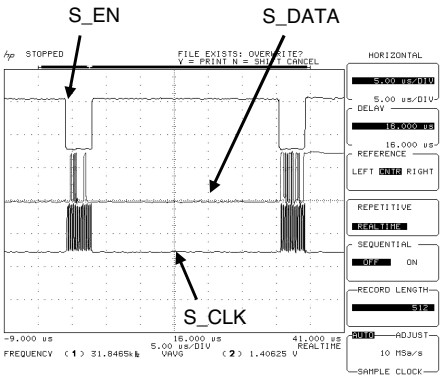

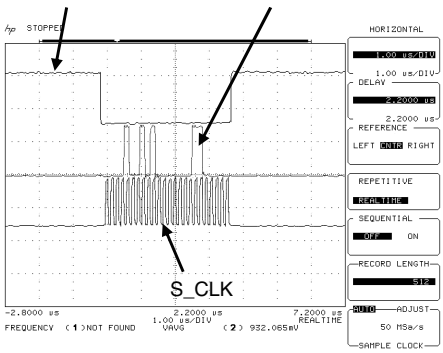

Checking FEM & Mobile SW (1) (Rx pass continued)

Checking Flow

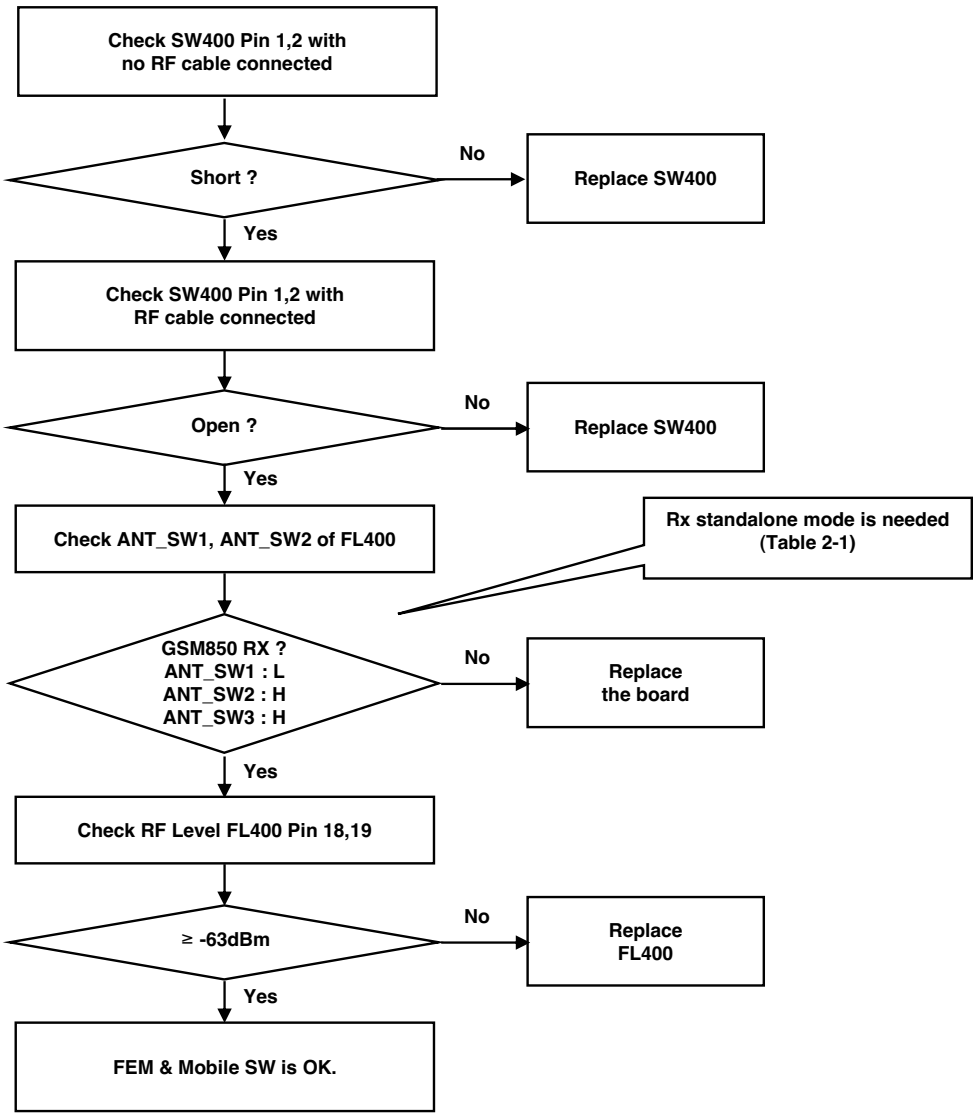

4. TROUBLE SHOOTING

Checking Points

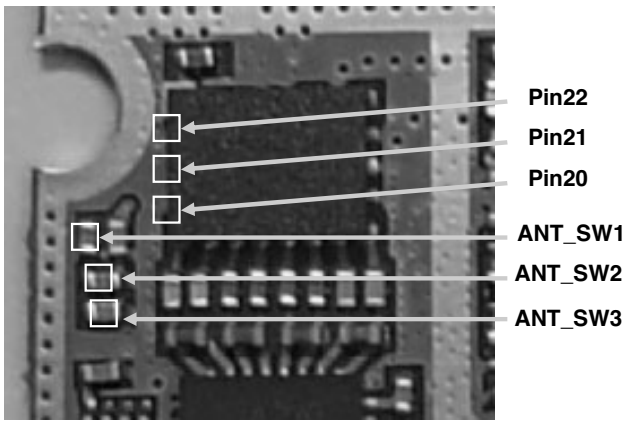

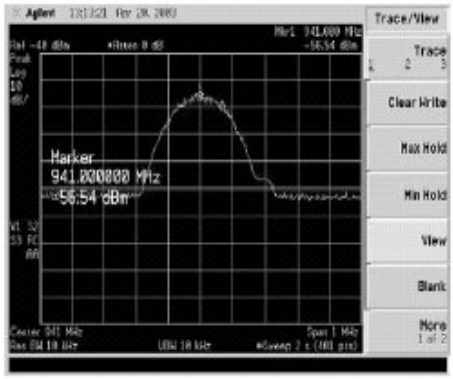

Mobile S/W & FEM Circuits Diagram

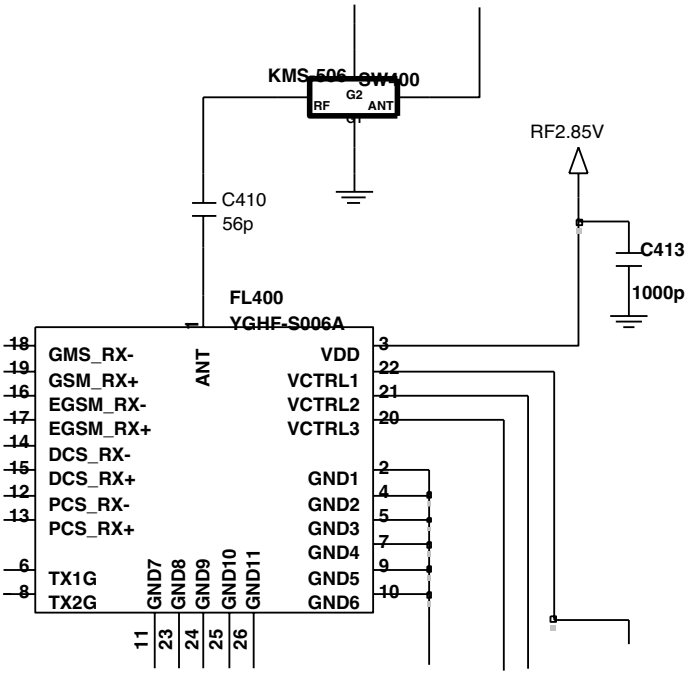

Checking Rx I/Q (Rx pass continued)

Checking Points

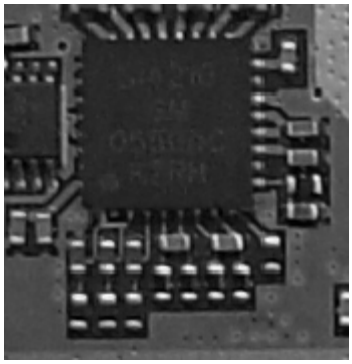

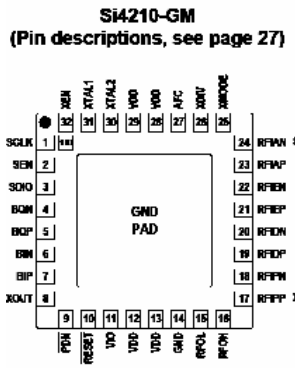

Checking Flow

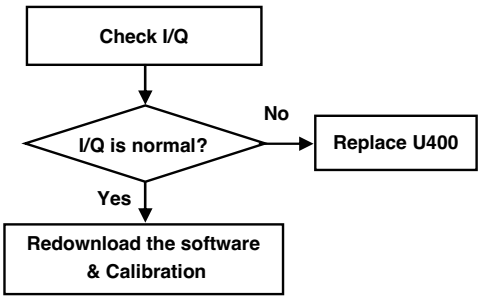

Rx IQ Circuit

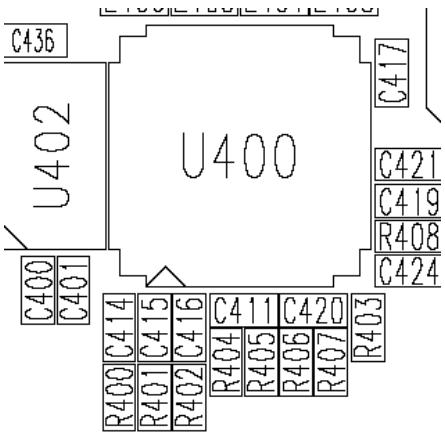

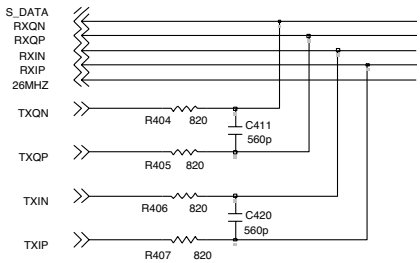

Waveform

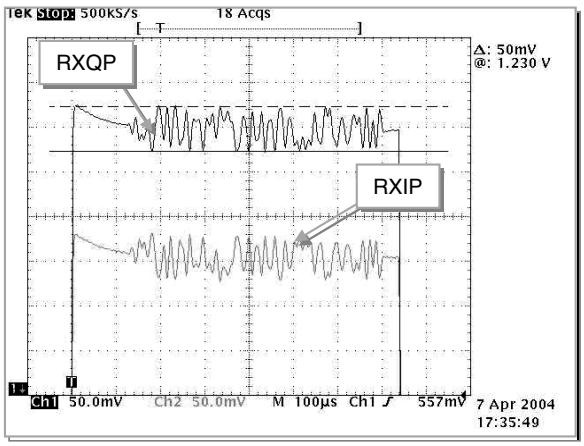

Trouble Shooting Transmitter Part

Checking Flow

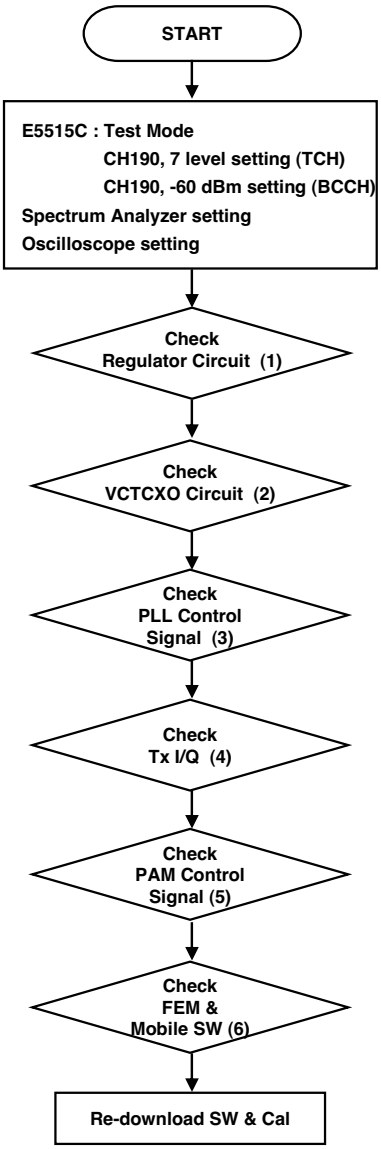

Checking Points

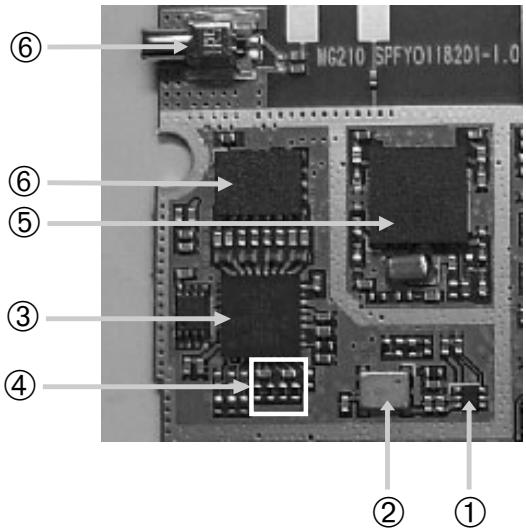

Checking Regulator Circuit (Tx pass continued)

Checking Points

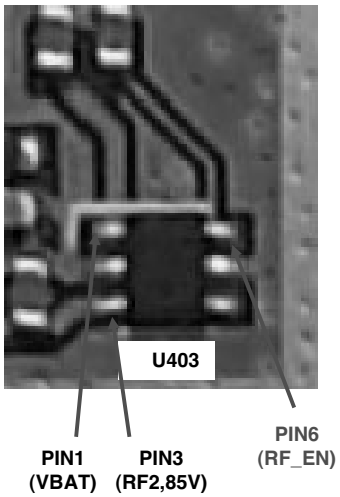

Checking Flow

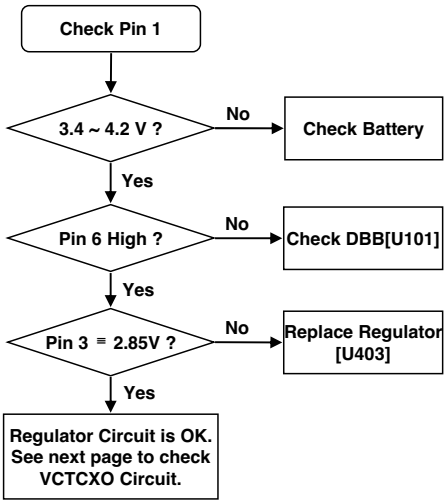

LDO Circuit Diagram

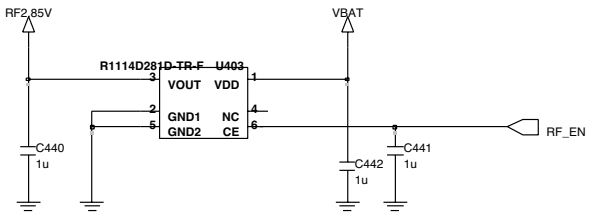

Waveform

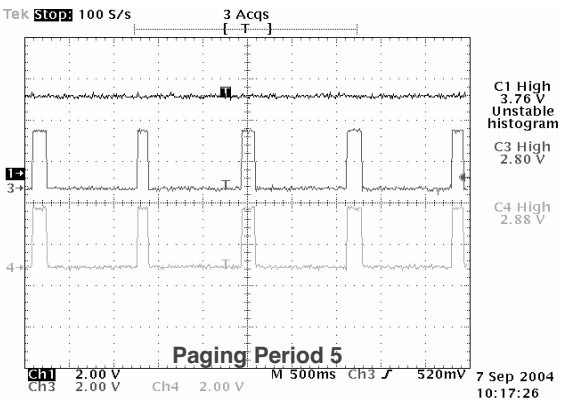

Checking VCTCXO Circuit (Tx pass continued)

Checking Points

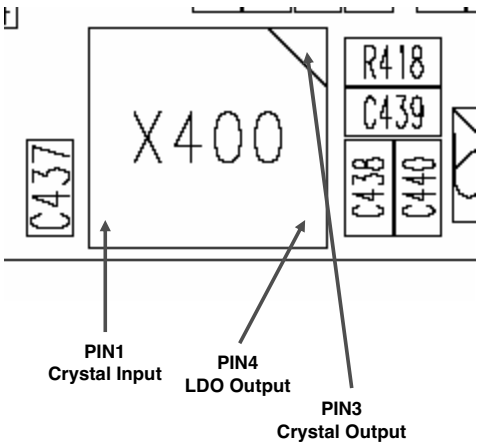

Checking Flow

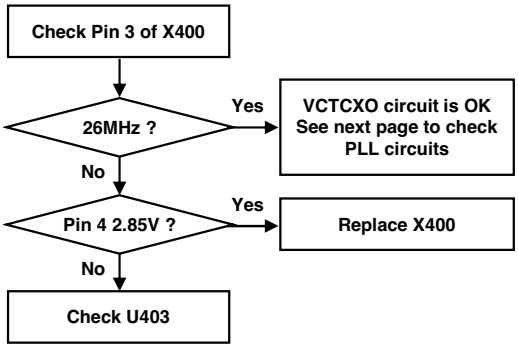

VCTCXO Circuit Diagram

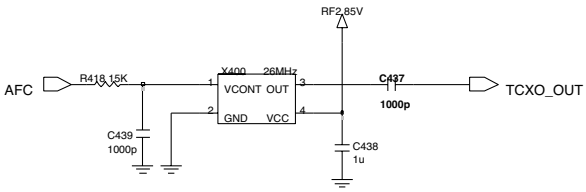

Waveform

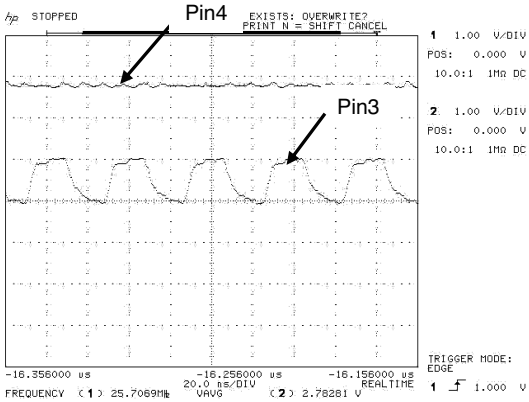

Checking PLL Circuit (Tx pass continued)

Checking Points

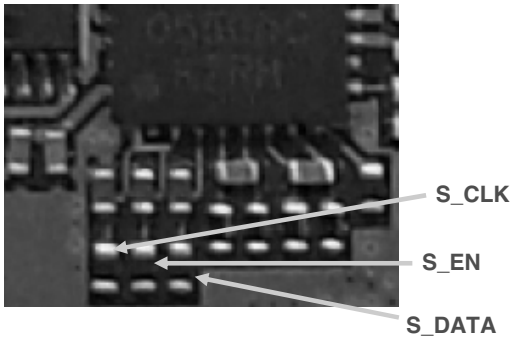

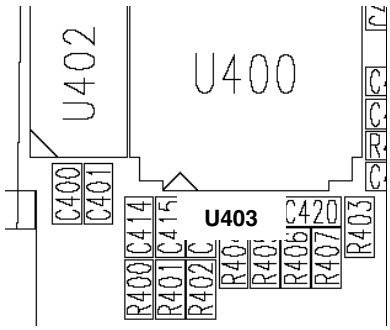

Checking Flow

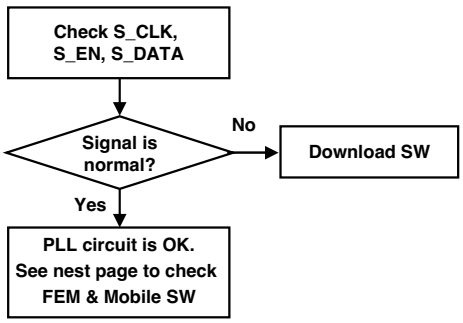

Control Signal Circuit Diagram

Waveform

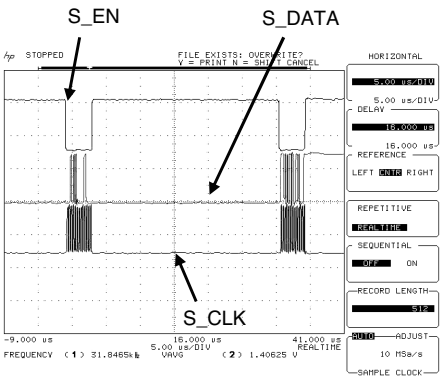

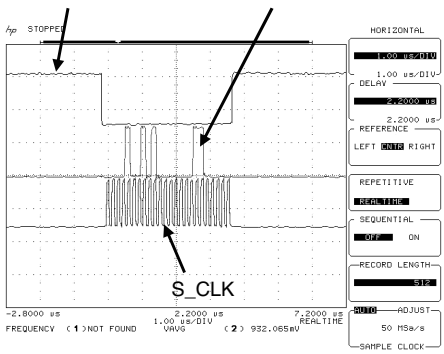

Checking Tx I/Q (Tx pass continued)

Checking Points

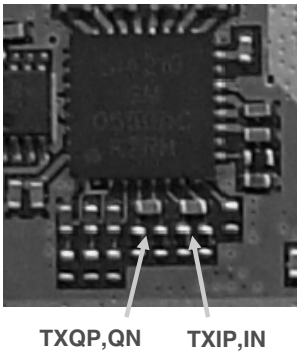

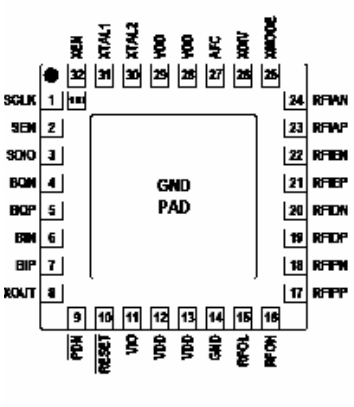

Rx IQ Circuit

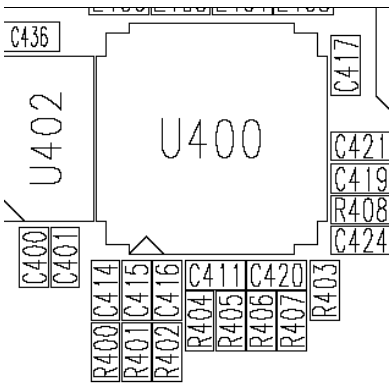

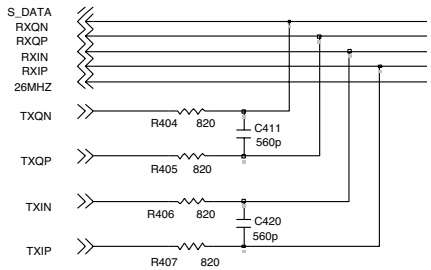

Checking Flow

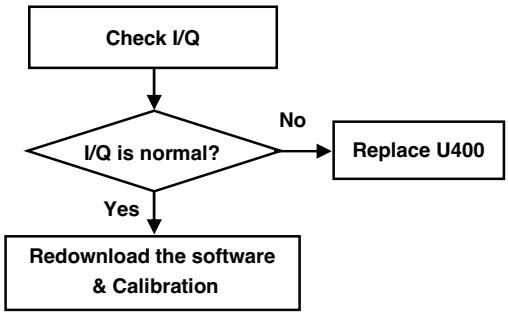

Waveform

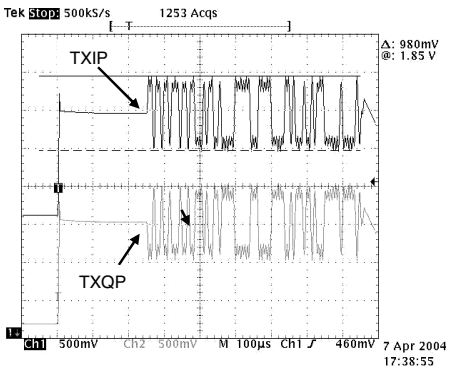

Checking PAM Circuits (Tx pass continued)

Checking Points

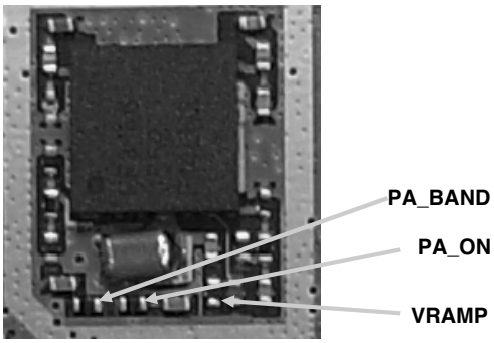

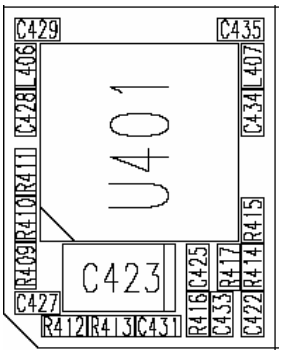

Checking Flow

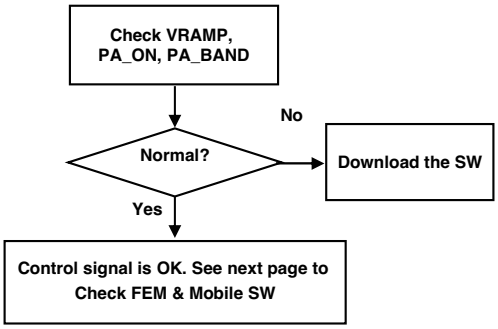

Tx PAM Circuit Diagram

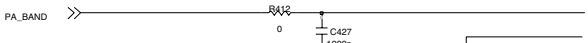

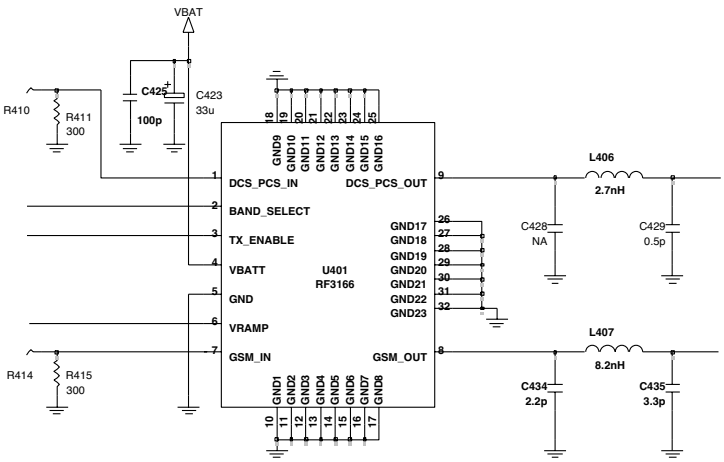

Waveform

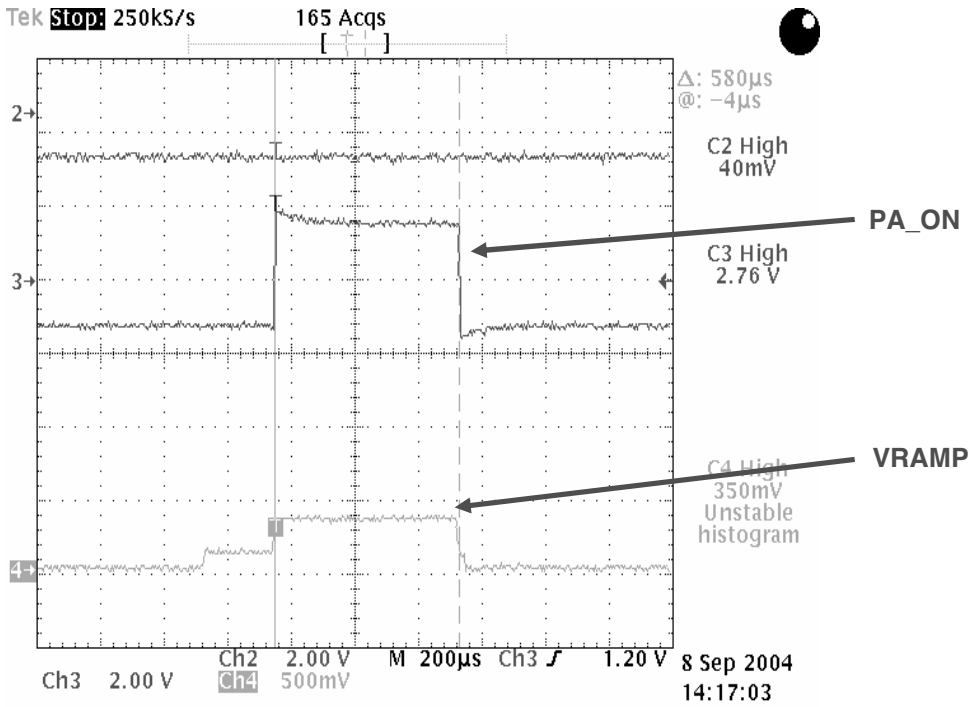
Tek Stop: 250kS/s
165 Acqs
Δ: 580µs
@: −4µs
C2 High
40mV
PA_ON
C3 High
2.76 V
VRAMP
C4 High
350mV
Unstable
histogram
Ch2 2.00 V
M 200µs Ch3 ∫ 1.20 V
Ch3 2.00 V
Ch4 500mV
8 Sep 2004
14:17:03

Checking FEM & Mobile SW (1) (Tx pass continued)

Checking Points

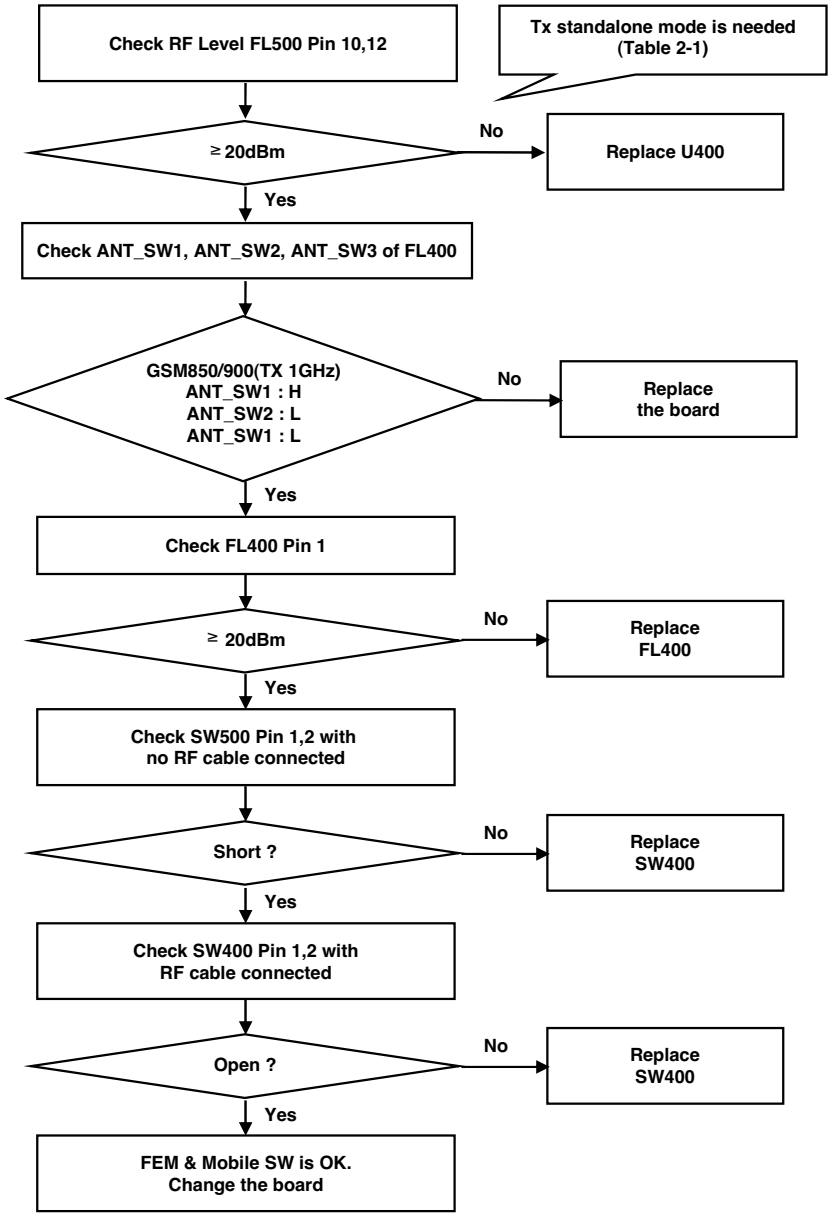

4. TROUBLE SHOOTING

Checking Points

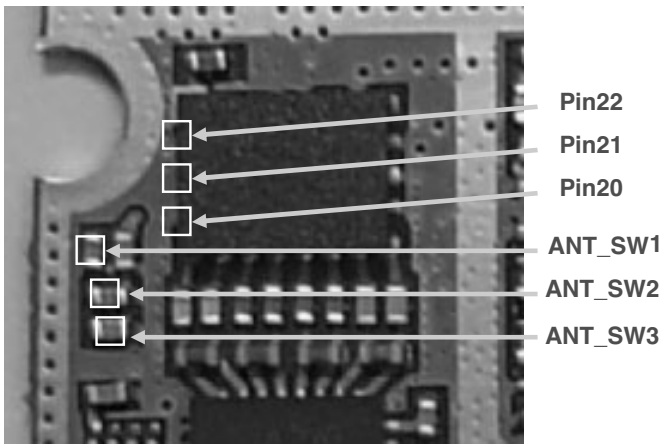

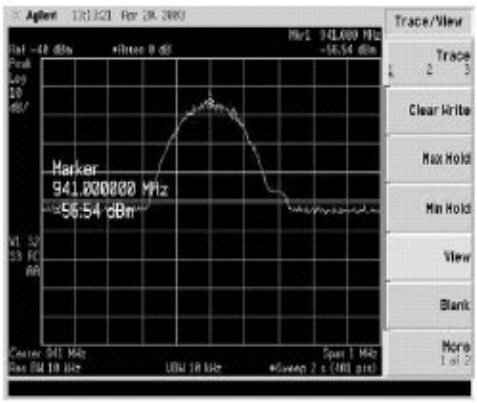

Mobile S/W & FEM Circuits Diagram

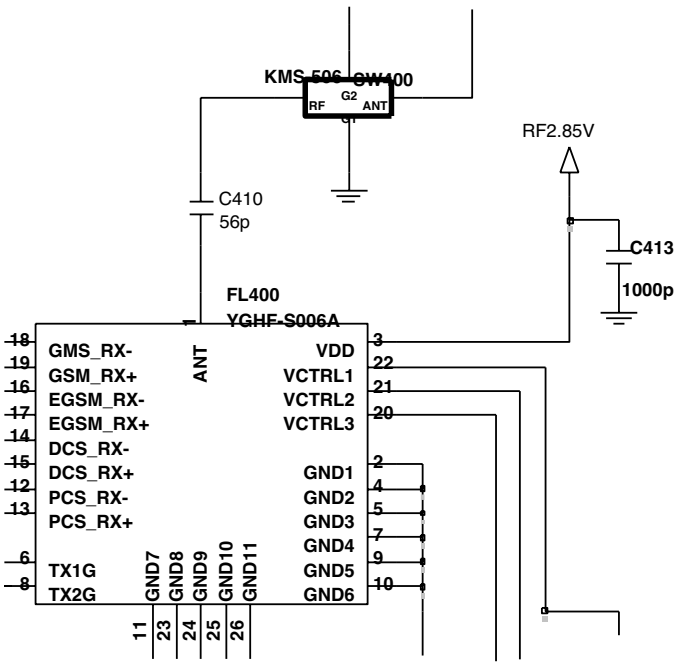

5. DOWNLOAD

5.1 Download Setup

5.1.1 In case of using the Data kit

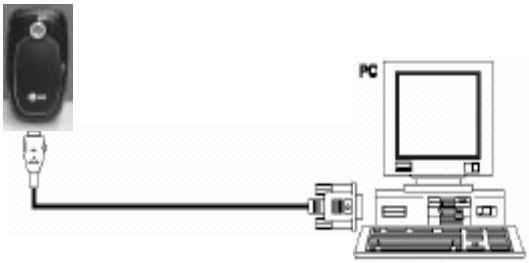

Figure 5-1 Describes Download Setup

Preparation

- Target Handset
- Data kit
- Battery
- IBM compatible PC supporting RS-232 with Windows 98 or newer

If you use data kit, you should have a battery with the voltage above 3.7V.

5.1.2 In case of using the PIF

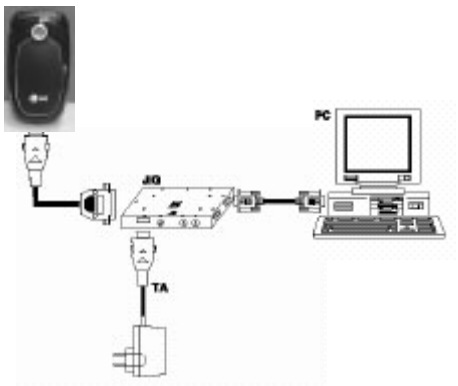

Preparation

- Target Handset
- PIF
- RS-232 Cable and PIF-to-Phone interface Cable
- TA/Power Supply or Battery
- BM compatible PC supporting RS-232 with Windows 98 or newer

If you use battery, you should have a battery with the voltage above 3.7V.

5.2 Download Procedure

5.2.1. Computer Program file -> MultiGSM.exe Click

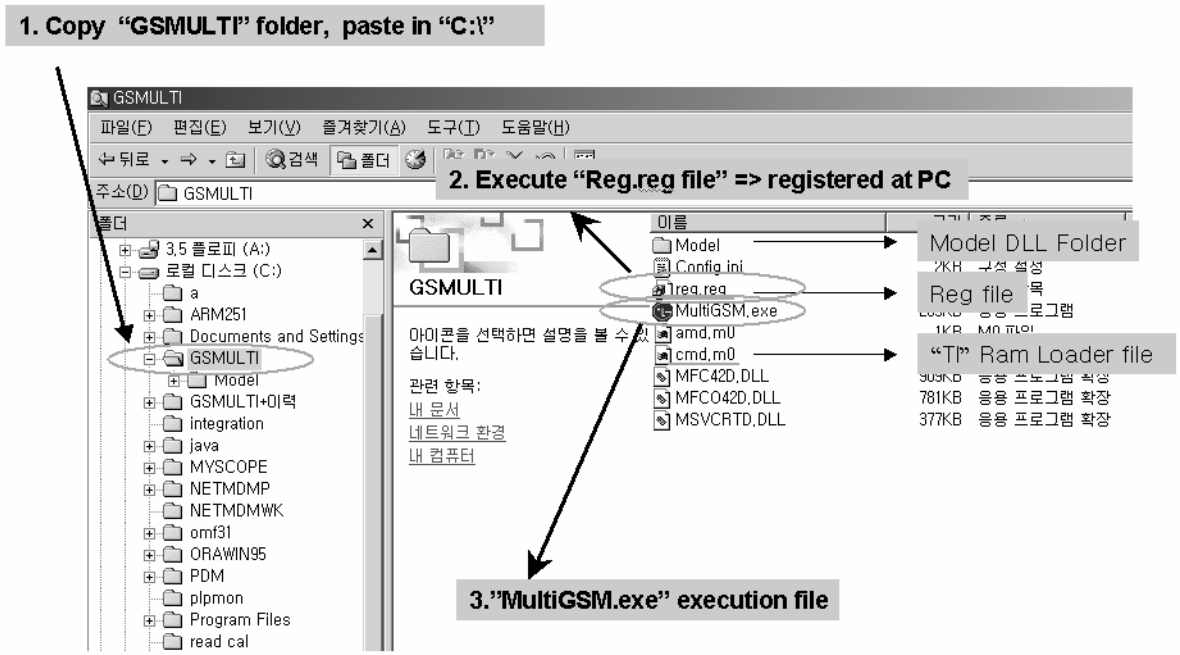

5.2.2. Click the “Setting” button.
Then, choose Configuration which is going to download.

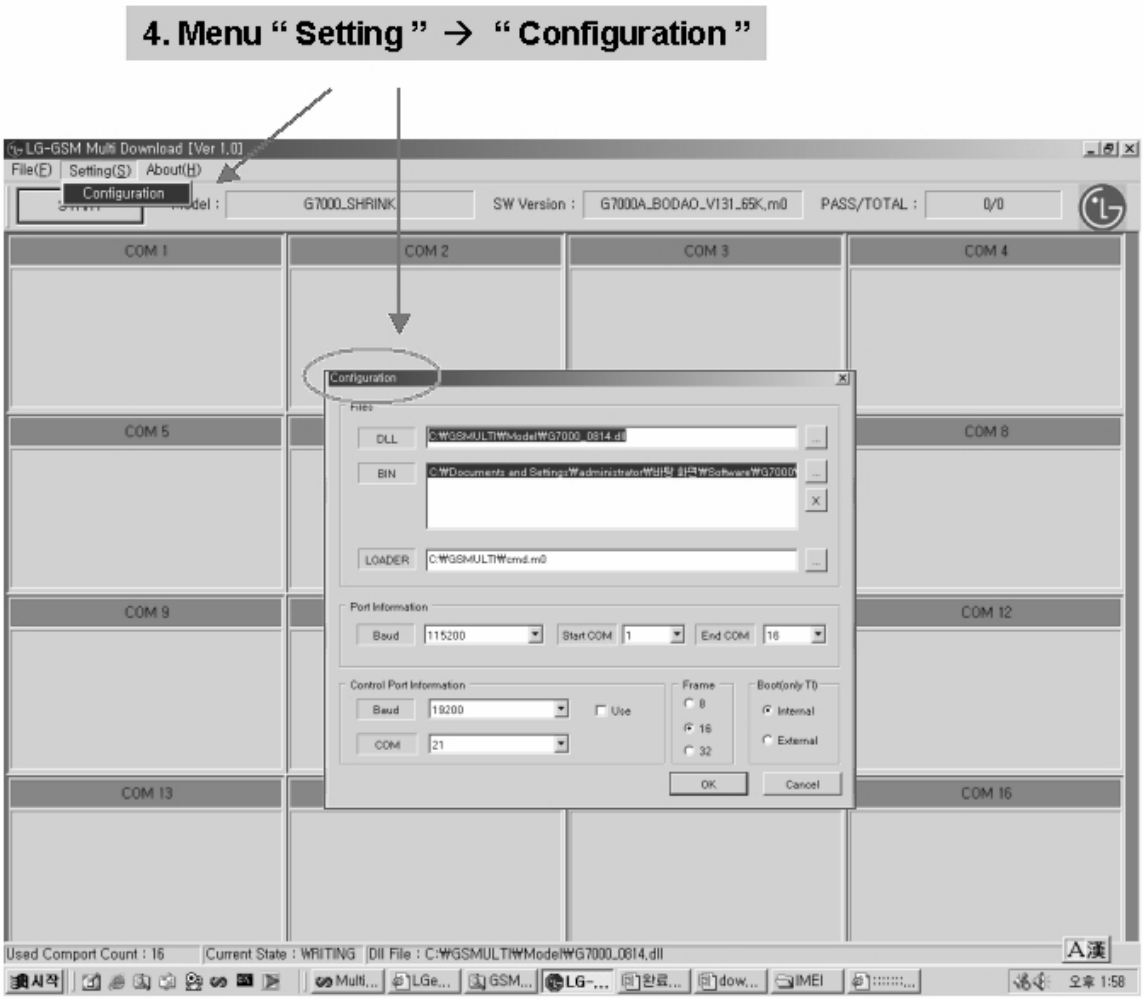

5.2.3. Configuration Setting

5. Configuration : Select values like below

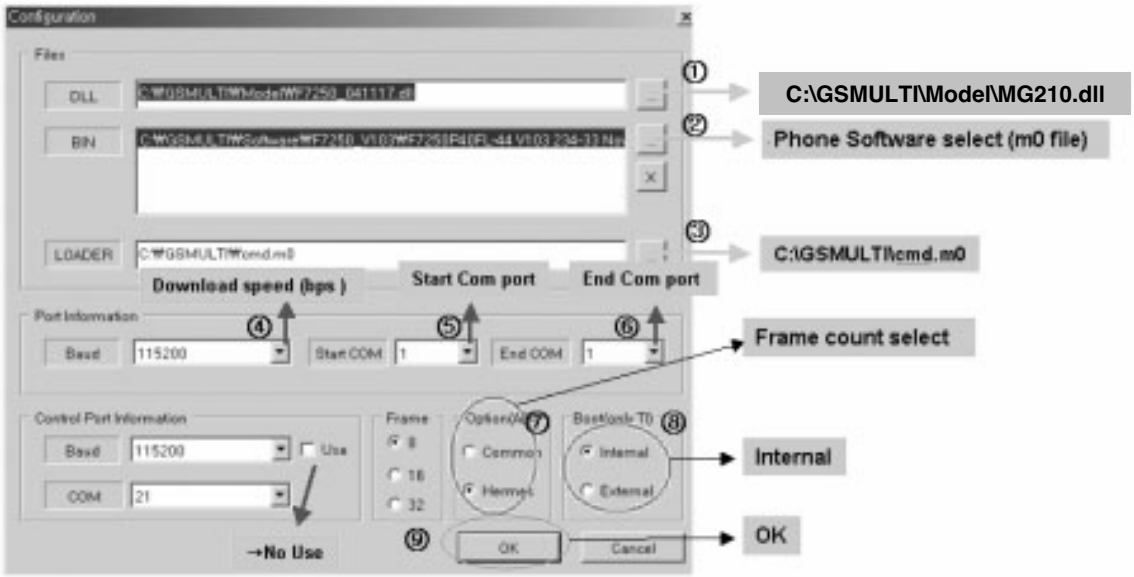

- Download speed :TI Model →115200bps, ADI Model →460800bps
- Start COM:1, End COM:16
- Frame:16

→ 16port Setting Default condition

5.2.4. Press “Start Button”.

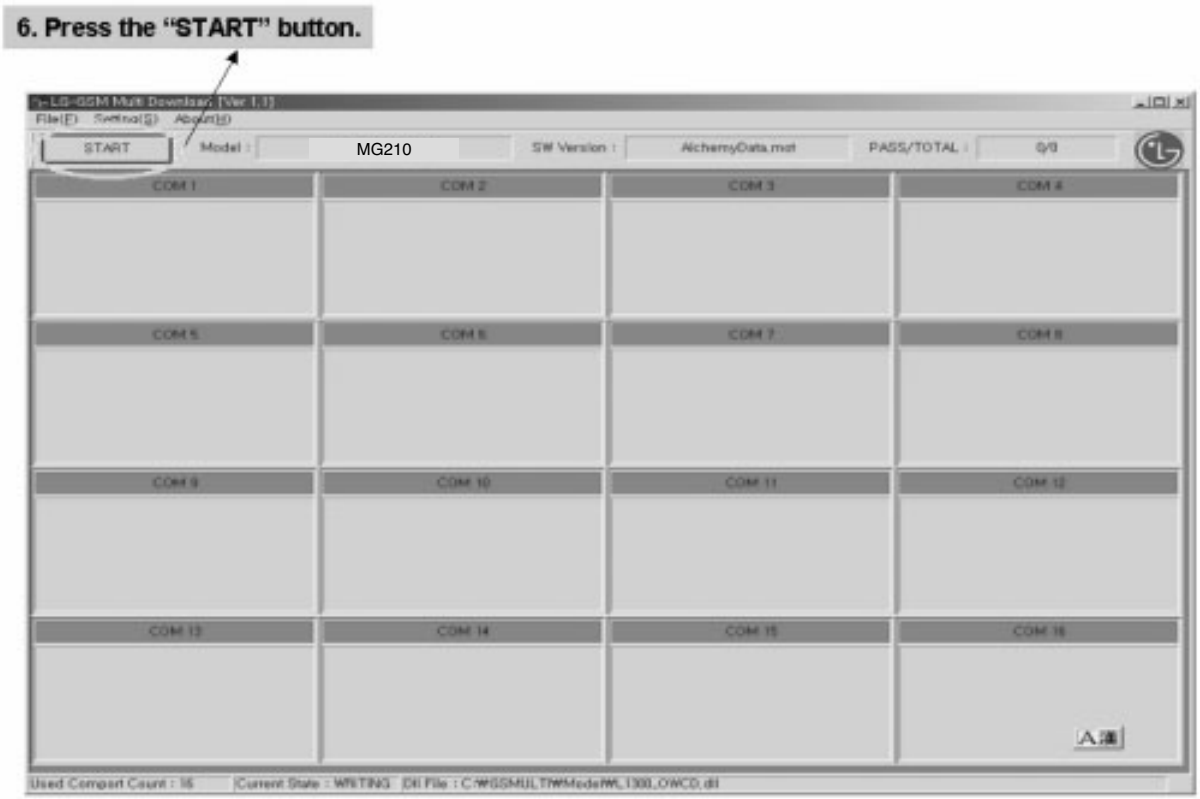

5.2.5. After “Start Button”, Which Stand-by condition

7. Stand-by Condition: “ Wait phone connecting “ is displayed → Connect the Phone.

5.2.6. SW downloading Condition.

※ Downloading : Start

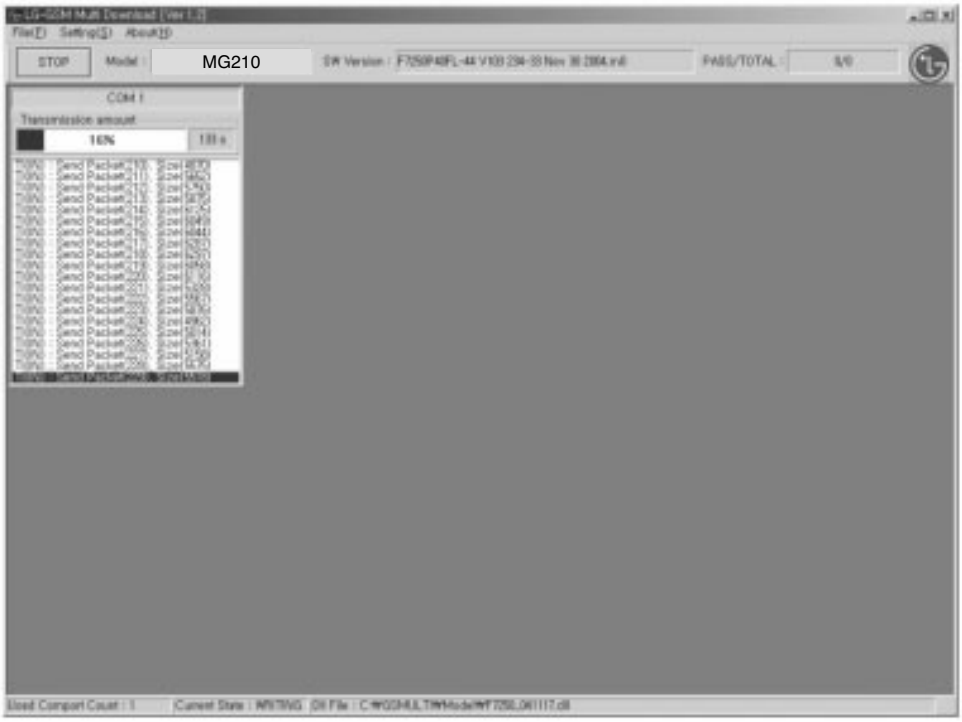

5.2.7. SW downloading END Condition.

※ Downloading : End

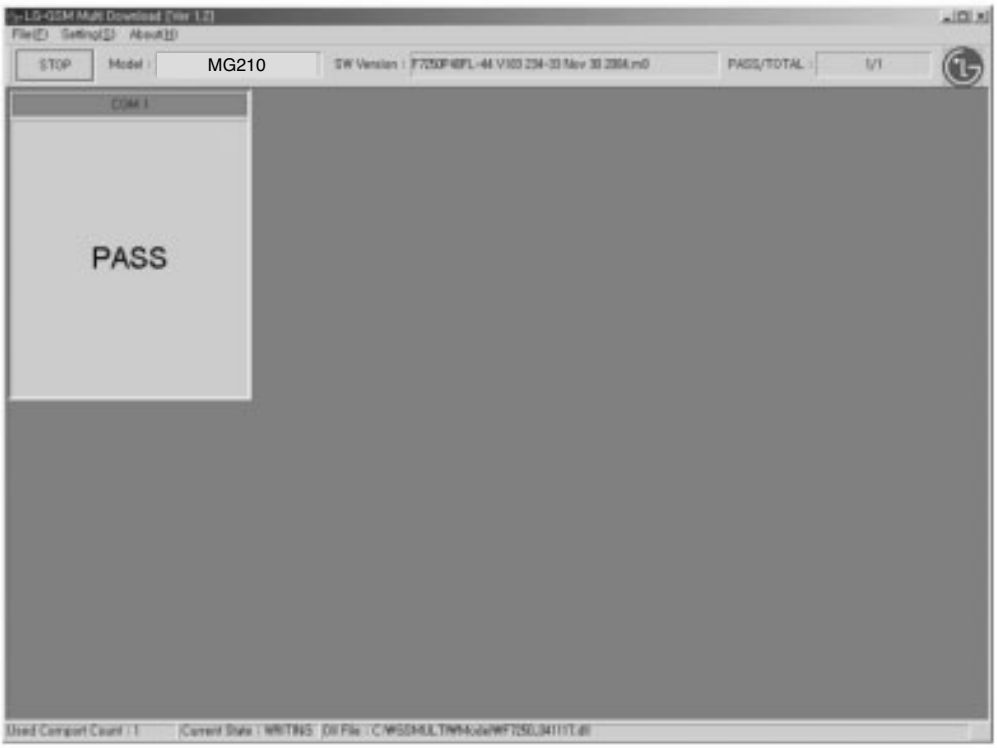

6. SERVICE AND CALIBRATION

6.1 Calibration

6.1.1 Equipment Setup

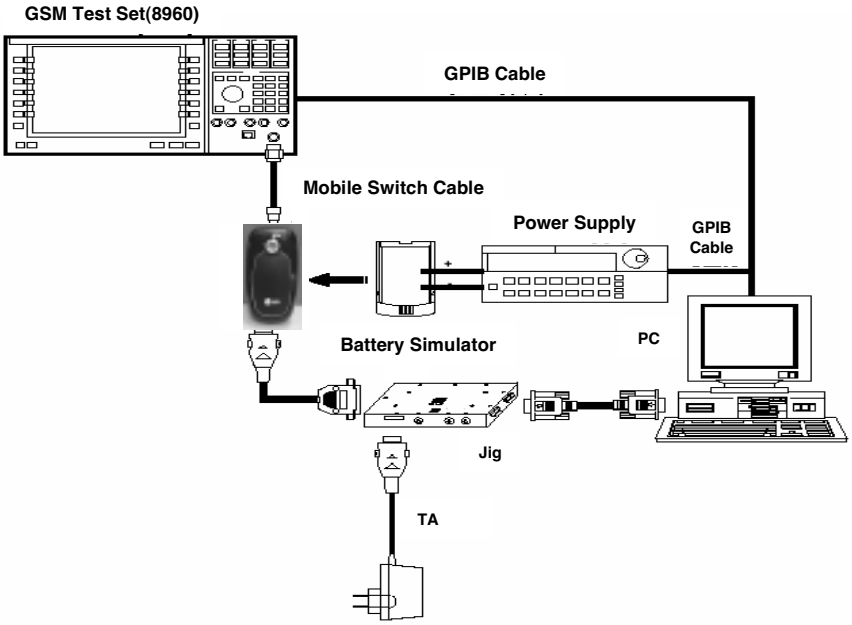

Figure 6-1 Calibration Equipment List

6.1.2 RF Calibration Program

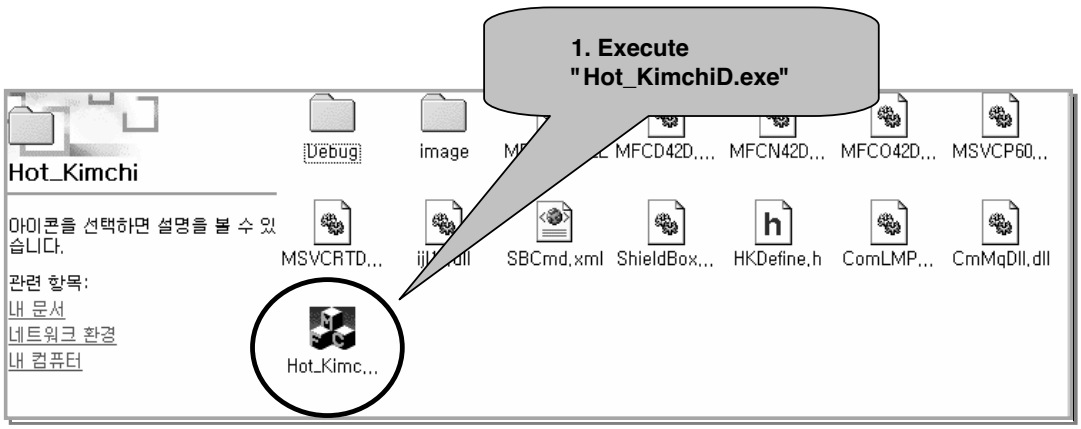

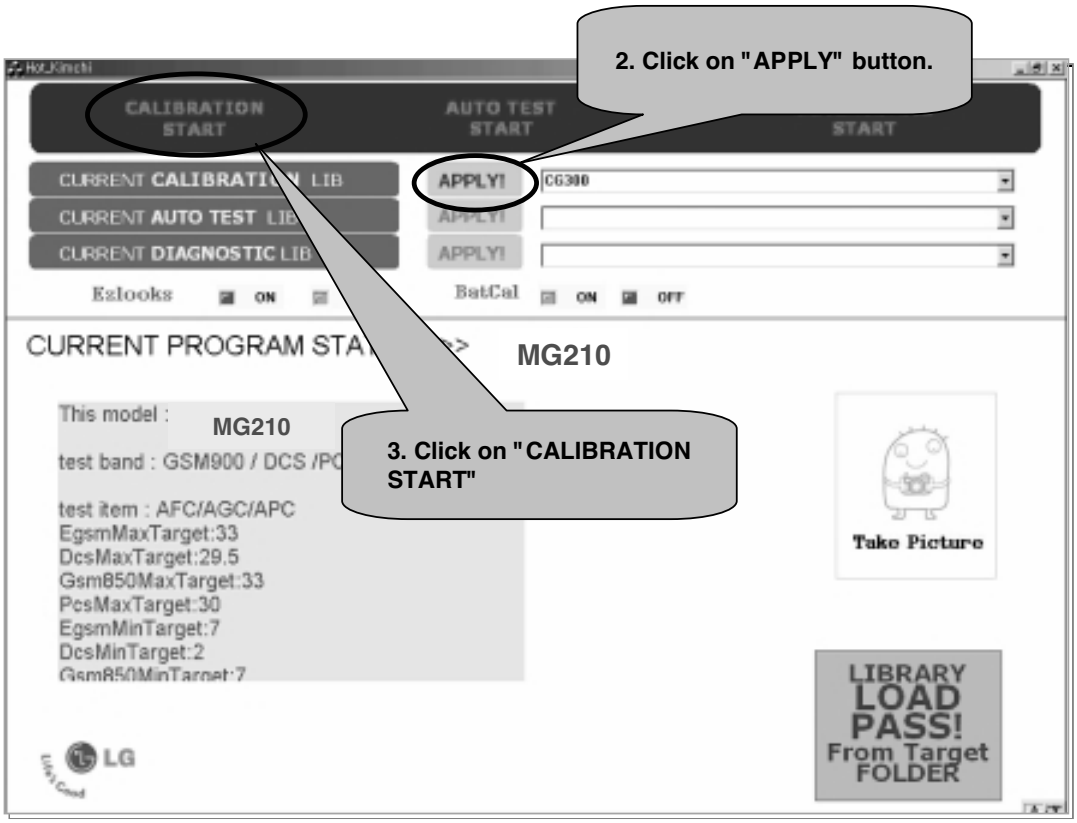

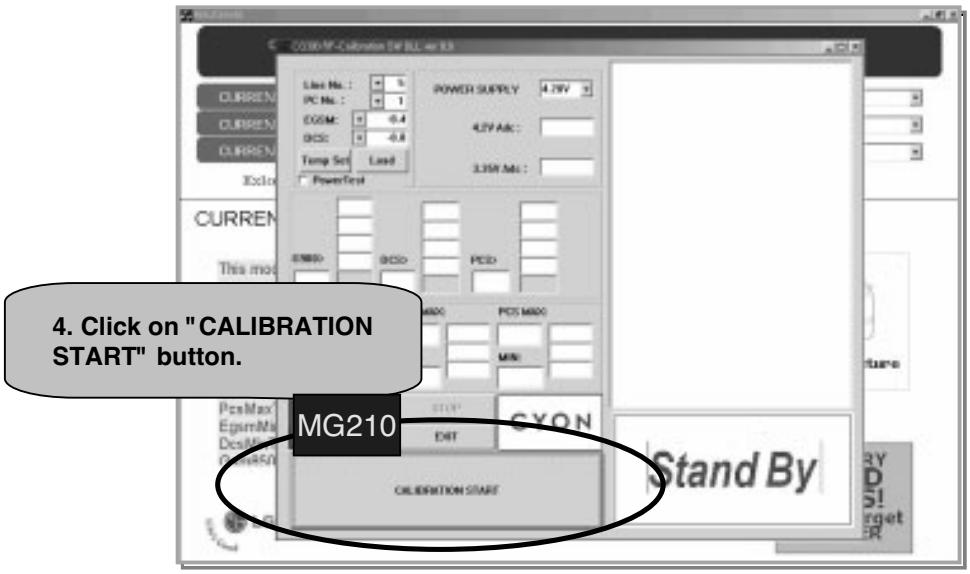
4. Click on "CALIBRATION START" button.
MG210
CYON
Stand By
CALIBRATION START

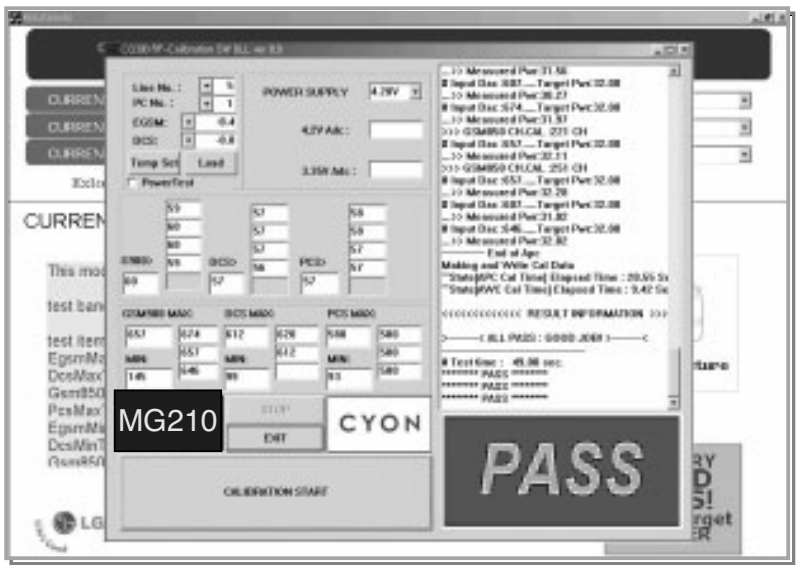
MG210
CYON
PASS
CALIBRATION START

7. CIRCUIT DIAGRAM

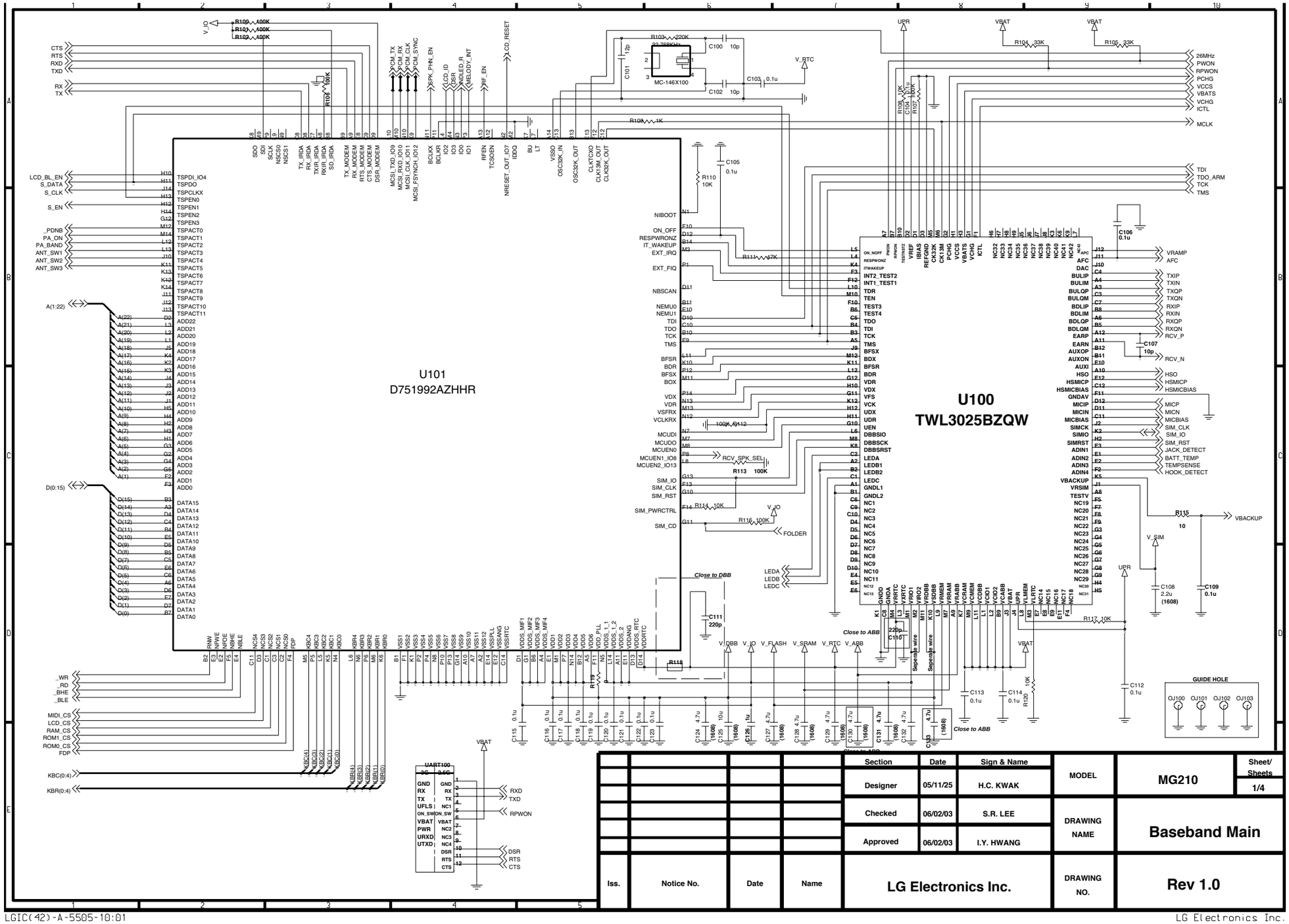

7. CIRCUIT DIAGRAM

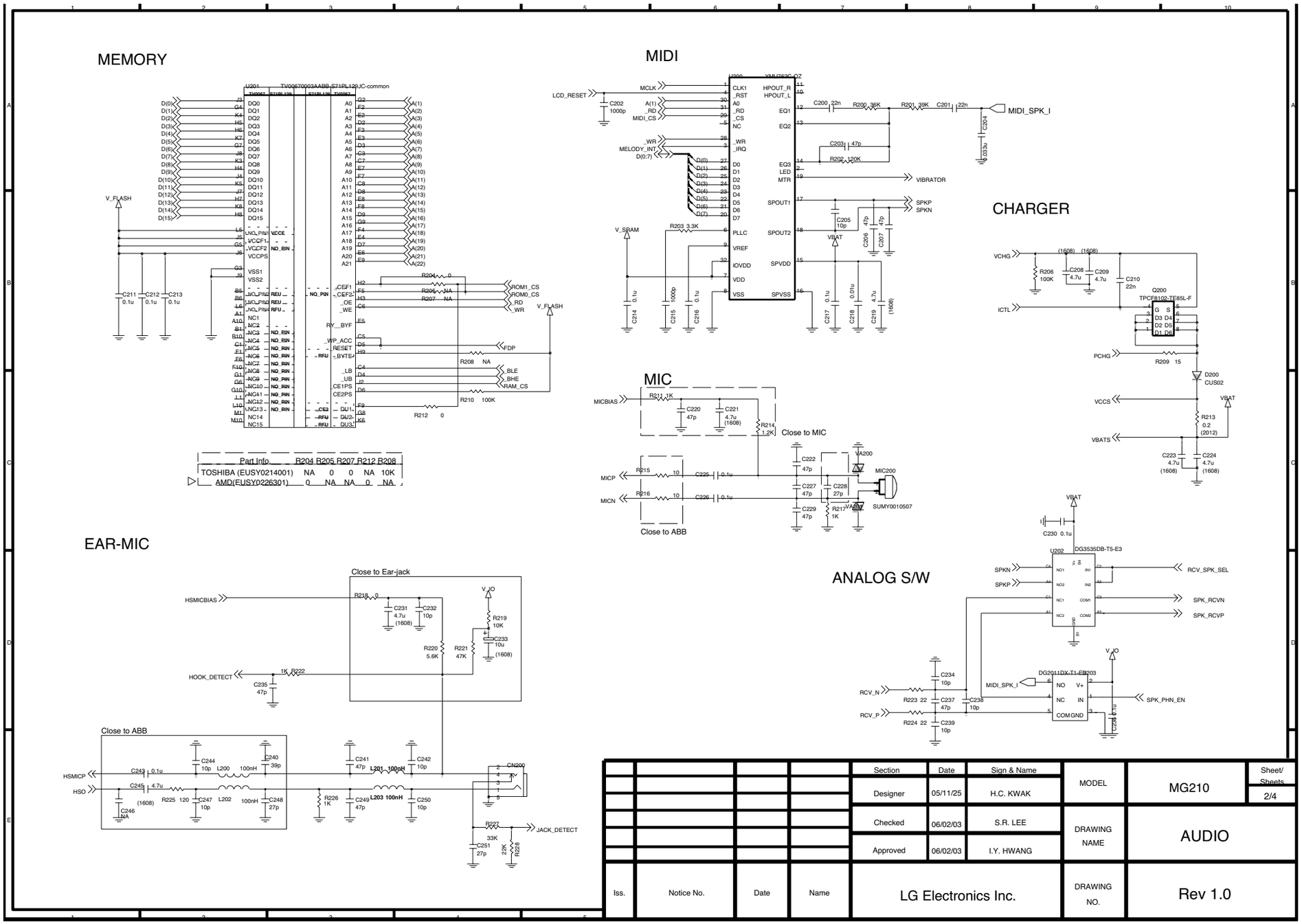

7. CIRCUIT DIAGRAM

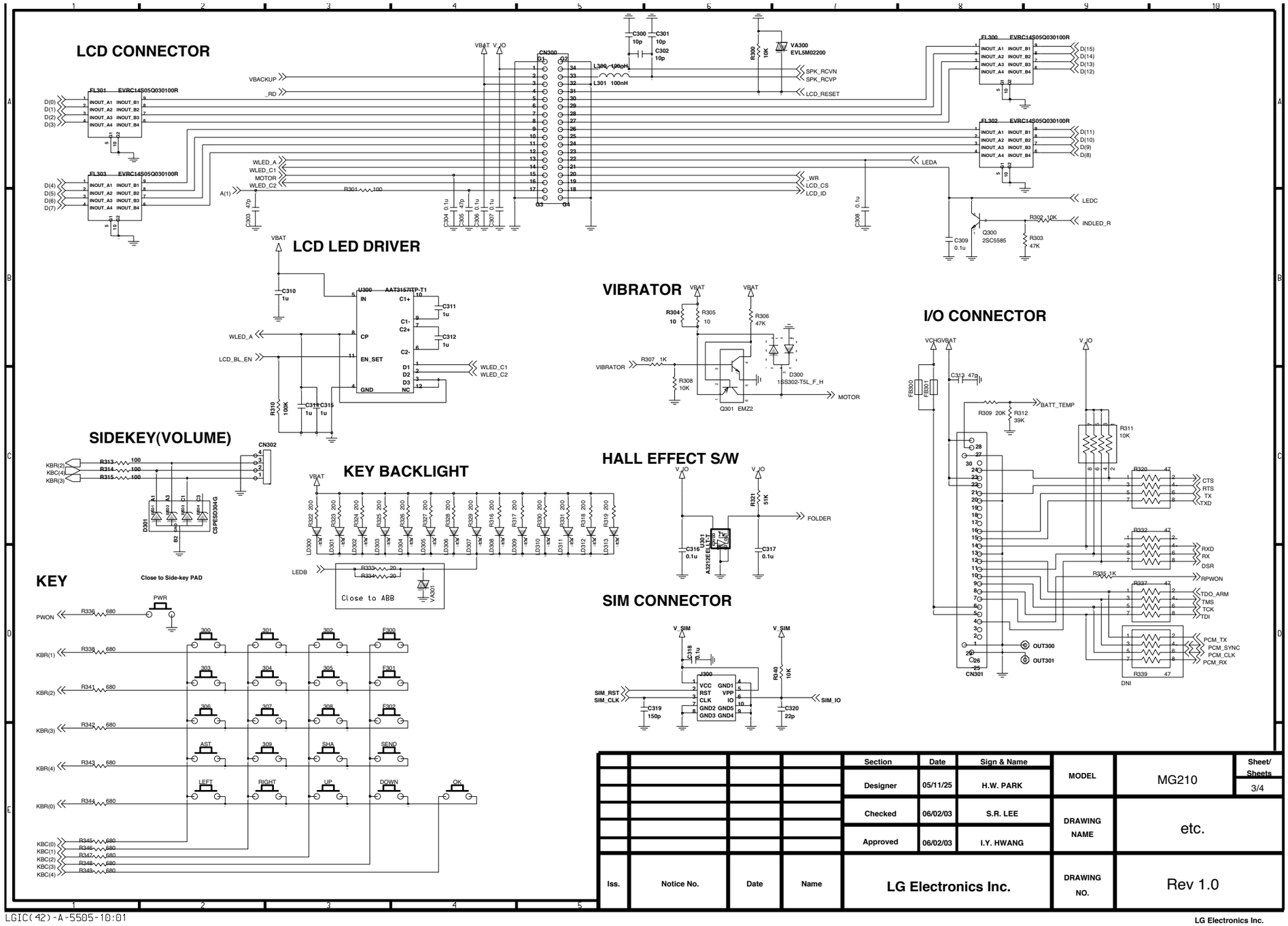

7. CIRCUIT DIAGRAM

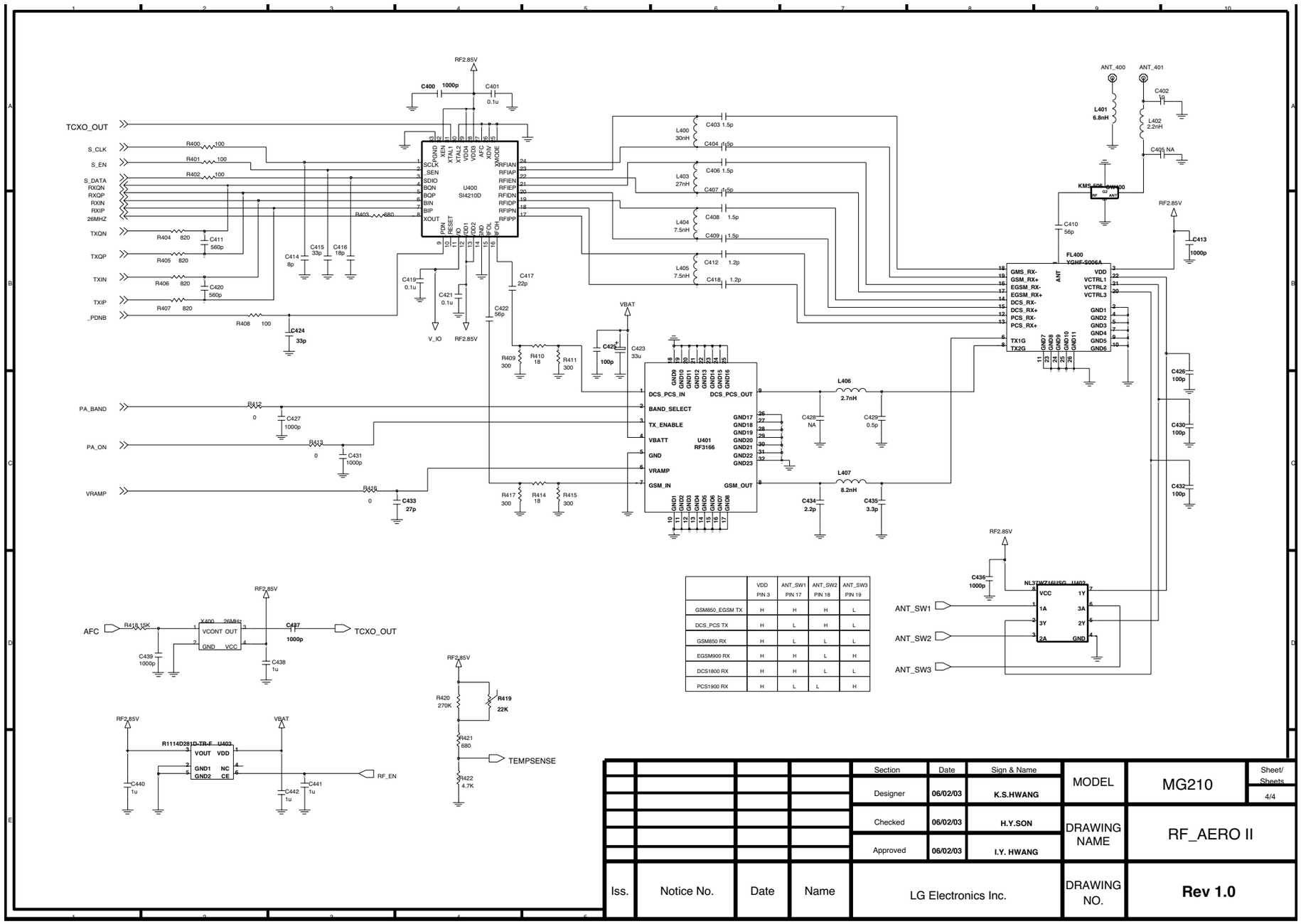

	VDD PIN 3	ANT_SW1 PIN 17	ANT_SW2 PIN 18	ANT_SW3 PIN 19
GSM850_EGSM TX	H	H	H	L
DCS_PCS TX	H	L	H	L
GSM850 RX	H	L	L	L
EGSM900 RX	H	H	L	H
DCS1800 RX	H	H	L	L
PCS1900 RX	H	L	L	H

8. pcb layout

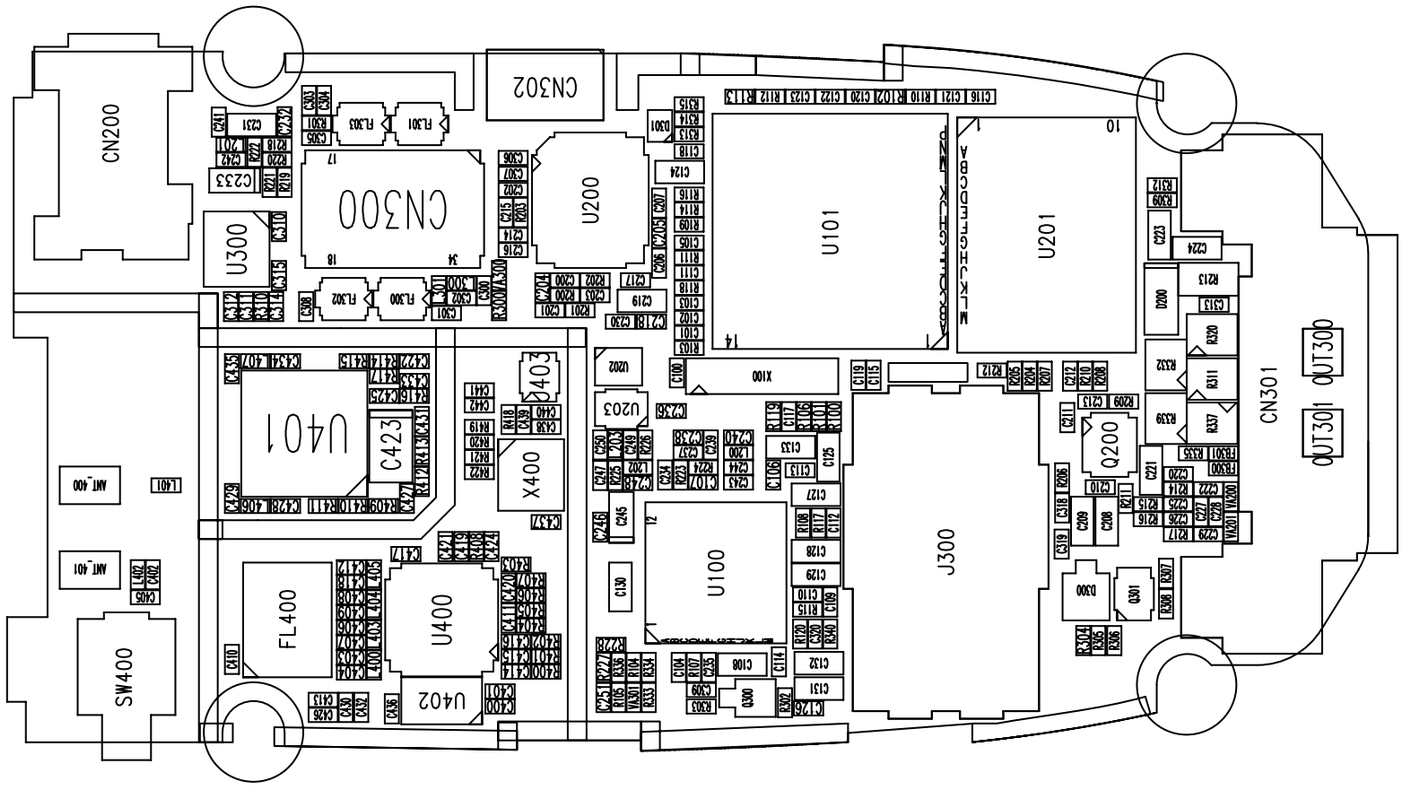

MG210 SPFY0118201-1.0-TOP

8. pcb layout

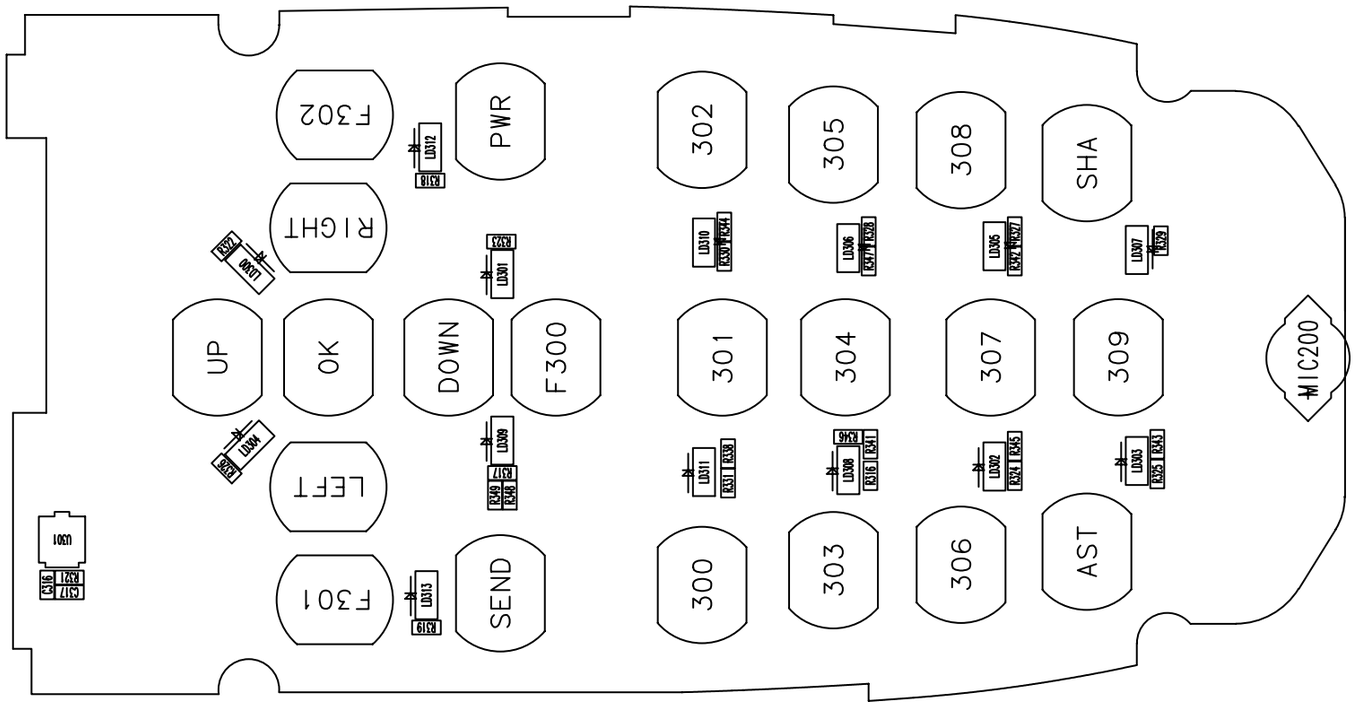

MG210 SPFY0118201-1.0-BTM

9. ENGINEERING MODE

Engineering mode is designed to allow a service man/engineer to view and test the basic functions provided by a handset. The key sequence for switching the engineering mode on is “2945#*# “Select. Pressing END will switch back to non-engineering mode operation. Use Up and Down key to select a menu and press ‘select’ key to progress the test. Pressing ‘back key will switch back to the original test menu.

[1] All auto test

[2] Baseband test

[2-1] LED

[2-1-1] Indicator LED

[2-1-2] Backlight

[2-2] LCD

[2-2-1] LCD Auto

[2-2-2] Manual color Test

[2-2-3] LCD Color

[2-2-4] LCD Contrast

[2-2-5] Temperature Table

[2-3] Font

[2-3-1] Font 810

[2-3-2] Font 810i

[2-3-3] Font 810b

[2-3-4] Font 814

[2-3-5] Font 814i

[2-3-6] Font 814b

[2-3-7] Font 1018

[2-3-8] WapFont

[2-4] Alert

[2-4-1] Vibrator

[2-4-2] Ring

[2-4-3] Effect Sound

[2-4-4] iMelody Sound

[2-4-5] EMS Sound

[2-4-6] Volume

[2-5] Serial Port

[2-5-1] Modem

[2-6] Battery Info1

[2-7] Audio Gain

[2-8-1] Receiver

[2-8-2] EarMic

[2-8-3] Loud Speaker

[2-8-4] HANDSFREE

[2-8-5] Default Value

[2-8-6] DAI Test

[2-8-7] Loopback Test

[2-8-8] Speaker Gain

[3] MG210 Vers

[4] ENG MODE

[4-1] Cell Environ

[4-2] Location Info

[4-3] Layer1 Info

[4-4] Change Frequency Band

[5] Call Timer

[6] Factory Default

10. STANDALONE TEST

10.1 Setting Method

10.1.1 COM Port

In the “Dialog Menu”, select the values as explained below.

- Port : select a correct COM port
- Baudrate : 115200
- Leave the rest as default values

10.1.2 Tx Test

1. Selecting Channel

- Select one of GSM850 or GSM900, DCS, PCS Band and input appropriate channel.

2. Selecting APC

a. Select either Power level or DAC value.

b. Power level

- Input appropriate value GSM (between 5~19) or DCS/PCS (between 0~15)

c. DAC value

- You may adjust directly the power level with DAC values.

10.1.3 Rx Test

1. Selecting Channel

- Select one of GSM 850 or GSM900, DCS, PCS Band and input appropriate channel.

2. Automatic Gain Control and Instrument Power level

See if the value of RSSI is close to -60dBm when setting the value 40 AGC Value Setting.

- Normal phone should indicate the value of RSSI close to -60dBm.

11. EXPLODED VIEW & REPLACEMENT PART LIST

11.1 EXPLODED VIEW

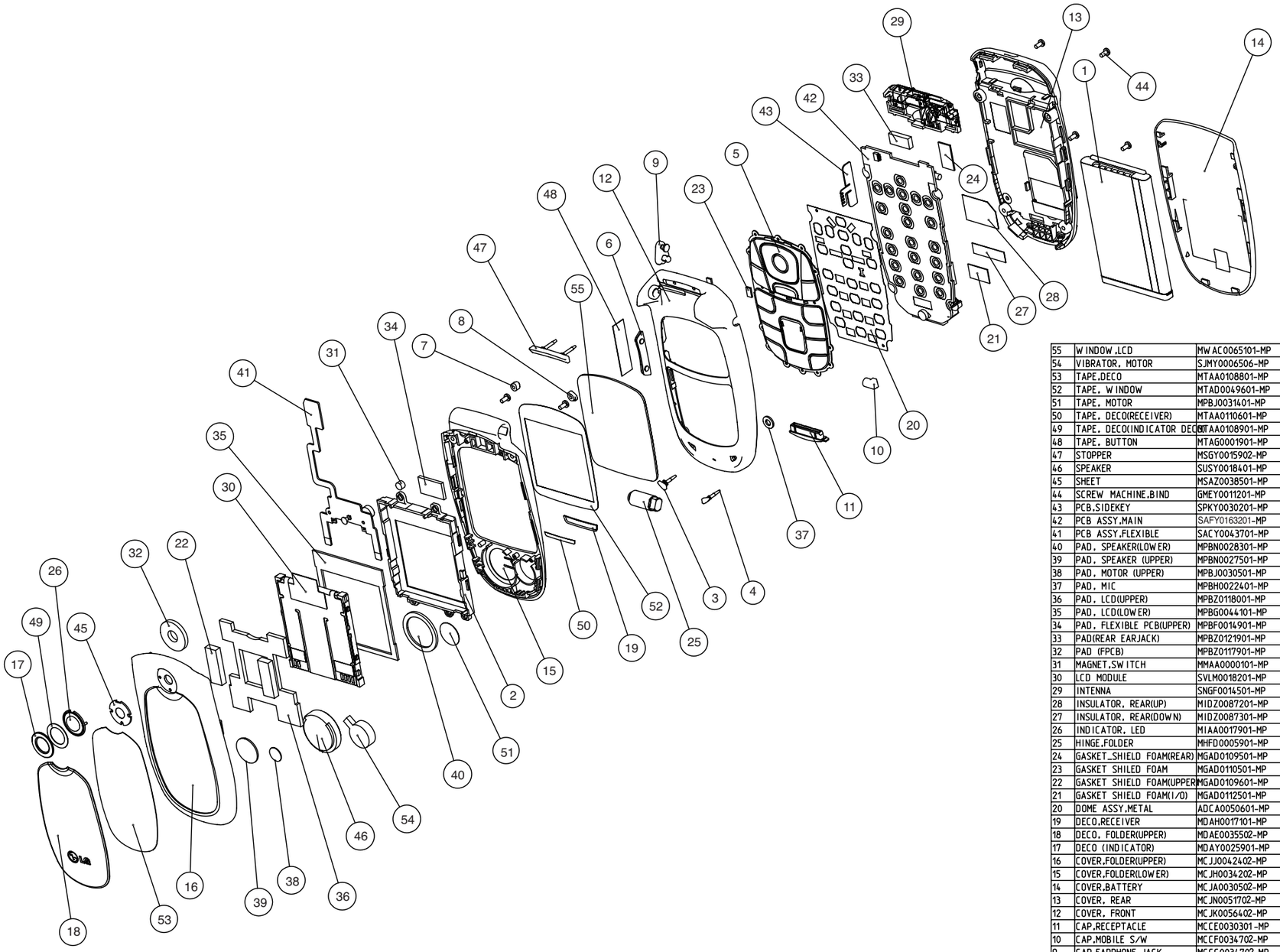

No.	Part Name	Part No.	Q'ty	REMARK
55	WINDOW,LCD	MWAC0065101-MP	1	
54	VIBRATOR, MOTOR	SJMY0006506-MP	1	
53	TAPE,DECO	MTAA0108801-MP	1	
52	TAPE, WINDOW	MTAD0049601-MP	1	
51	TAPE, MOTOR	MPBJ0031401-MP	1	
50	TAPE, DECO(RECEIVER)	MTAA0110601-MP	1	
49	TAPE, DECO(INDICATOR DECO	MTAA0108901-MP	1	
48	TAPE, BUTTON	MTAG0001901-MP	1	
47	STOPPER	MSGY0015902-MP	1	
46	SPEAKER	SUSY0018401-MP	1	
45	SHEET	MSAZ0038501-MP	1	
44	SCREW MACHINE,BIND	GMEY0011201-MP	6	
43	PCB,SIDEKEY	SPKY0030201-MP	1	
42	PCB ASSY,MAIN	SAFY0163201-MP	1	
41	PCB ASSY,FLEXIBLE	SACY0043701-MP	1	
40	PAD, SPEAKER(LOWER)	MPBN0028301-MP	1	
39	PAD, SPEAKER (UPPER)	MPBN0027501-MP	1	
38	PAD, MOTOR (UPPER)	MPBJ0030501-MP	1	
37	PAD, MIC	MPBH0022401-MP	1	
36	PAD, LCD(UPPER)	MPBZ0118001-MP	1	
35	PAD, LCD(LOWER)	MPBG0044101-MP	1	
34	PAD, FLEXIBLE PCB(UPPER)	MPBF0014901-MP	1	
33	PAD(REAR EARJACK)	MPBZ0121901-MP	1	
32	PAD (FPCB)	MPBZ0117901-MP	1	
31	MAGNET,SWITCH	MMAA0000101-MP	1	
30	LCD MODULE	SVLM0018201-MP	1	
29	INTENNA	SNGF0014501-MP	1	
28	INSULATOR, REAR(UP)	MIDZ0087201-MP	1	
27	INSULATOR, REAR(DOWN)	MIDZ0087301-MP	1	
26	INDICATOR, LED	MIAA0017901-MP	1	
25	HINGE,FOLDER	MHFD0005901-MP	1	
24	GASKET_SHIELD FOAM(REAR)	MGAD0109501-MP	1	
23	GASKET SHILED FOAM	MGAD0110501-MP	2	
22	GASKET SHIELD FOAM(UPPER)	MGAD0109601-MP	2	
21	GASKET SHIELD FOAM(I/O)	MGAD0112501-MP	1	
20	DOME ASSY,METAL	ADCA0050601-MP	1	
19	DECO,RECEIVER	MDAH0017101-MP	1	
18	DECO, FOLDER(UPPER)	MDAE0035502-MP	1	
17	DECO (INDICATOR)	MDAY0025901-MP	1	
16	COVER,FOLDER(UPPER)	MCJJ0042402-MP	1	
15	COVER,FOLDER(LOWER)	MCJH0034202-MP	1	
14	COVER,BATTERY	MCJA0030502-MP	1	
13	COVER, REAR	MCJN0051702-MP	1	
12	COVER, FRONT	MCJK0056402-MP	1	
11	CAP,RECEPTACLE	MCCE0030301-MP	1	
10	CAP,MOBILE S/W	MCCF0034702-MP	1	
9	CAP,EARPHONE JACK	MCCC0034702-MP	1	
8	CAP, SCREW Right(LOWER)	MCCH0079702-MP	1	
7	CAP, SCREW Left(LOWER)	MCCH0078302-MP	1	
6	BUTTON,SIDE	MBJL0030701-MP	1	
5	BUTTON,DIAL	MBJA0020902-MP	1	
4	BUMPER(R)	MBHY0018801-MP	1	
3	BUMPER (L)	MBHY0018901-MP	1	
2	BRACKET,LCD	MBFF0009801-MP	1	
1	BATTERY PACK,Li-Ion	SBPL0077901-MP	1	

11.1 Replacement Parts <Mechanic component>

Note: This Chapter is used for reference, Part order is ordered by SBOM standard on GCSC

Level	Location No.	Description	Part Number	Specification	Color	Remark
1		GSM(FOLDER)	TGFF0087212		Silver	
2	AAAY00	ADDITION	AAAY0169503		Silver	
3	MCJA00	COVER,BATTERY	MCJA0030502	MG210 SILVER	Silver	14
2	APEY00	PHONE	APEY0298102		Silver	
3	ACGG00	COVER ASSY,FOLDER	ACGG0072302	MG210 SILVER	Silver	
4	ACGH00	COVER ASSY, FOLDER(LOWER)	ACGH0043002	MG210 SILVER	Silver	
5	MBFF00	BRACKET,LCD	MBFF0009801	MG210 LCD BRACKET	Black	2
5	MCJH00	COVER,FOLDER(LOWER)	MCJH0034202	MG210 SILVER	Silver	15
5	MDAH00	DECO,RECEIVER	MDAH0017101	MG210	Silver	19
5	MMAA00	MAGNET,SWITCH	MMAA0000101			31
5	MPBF00	PAD,FLEXIBLE PCB	MPBF0014901	MG210 FPCB PAD(LOWER)	Black	34
5	MPBG00	PAD,LCD	MPBG0044101	MG210	Black	35
5	MPBJ00	PAD,MOTOR	MPBJ0031401	MG210, LOWER VIBRATOR PAD	Black	51
5	MPBN00	PAD,SPEAKER	MPBN0028301	MG210	Black	40
5	MTAA00	TAPE,DECO	MTAA0110601	MG210 TAPE DECO RECEIVER	Transparent	50
5	MTAD00	TAPE,WINDOW	MTAD0049601	MG210	Transparent	52
4	ACGJ00	COVER ASSY, FOLDER(UPPER)	ACGJ0056202	MG210 SILVER	Silver	
5	MCJJ00	COVER,FOLDER(UPPER)	MCJJ0042402	MG210 SILVER	Silver	16
5	MDAE00	DECO,FOLDER(UPPER)	MDAE0035502	MG210 SILVER	Silver	18
5	MDAY00	DECO	MDAY0025901	MG210 deco indicator led	Silver	17
5	MGAD00	GASKET,SHIELD FORM	MGAD0109601	MG210 UPPER GASKET SHIELD FOAM	Black	22
5	MIAA00	INDICATOR,LED	MIAA0017901	MG210	Transparent	26
5	MPBJ00	PAD,MOTOR	MPBJ0030501	MG210	Black	38
5	MPBN00	PAD,SPEAKER	MPBN0027501	MG210	Black	39
5	MPBZ00	PAD	MPBZ0117901	MG210 pad indicator	Black	32
5	MPBZ01	PAD	MPBZ0118001	MG210 pad upper	Black	36
5	MSAZ00	SHEET	MSAZ0038501	MG210 INDICATOR WINDOW SHEET	Black	45
5	MTAA00	TAPE,DECO	MTAA0108801	MG210 tape deco upper	Transparent	53
5	MTAA01	TAPE,DECO	MTAA0108901	MG210 tape deco indicator led	Transparent	49
4	ACGK00	COVER ASSY,FRONT	ACGK0069602	MG210 SILVER	Silver	
5	MBHY00	BUMPER	MBHY0018802	MG210 SILVER	Silver	4
5	MBHY01	BUMPER	MBHY0018902	MG210 SILVER	Silver	3

11. EXPLODED VIEW & REPLACEMENT PART LIST

Level	Location No.	Description	Part Number	Specification	Color	Remark
5	MBJL00	BUTTON,SIDE	MBJL0030701	MG210	Black	6
5	MCCC00	CAP,EARPHONE JACK	MCCC0034702	MG210 SILVER	Silver	11
5	MCJK00	COVER,FRONT	MCJK0056402	MG210 SILVER	Silver	12
5	MGAD00	GASKET,SHIELD FORM	MGAD0110501	MG210 GASKET SHIELD FOAM(FRONT)	Black	23
5	MPBH00	PAD,MIKE	MPBH0022401	MG210 FRONT MIC PAD	Black	37
5	MSGY00	STOPPER	MSGY0015902	MG210 SILVER	Silver	47
5	MTAG00	TAPE,BUTTON	MTAG0001901	MG210 BUTTON TAPE	Black	48
4	GMEY00	SCREW MACHINE,BIND	GMEY0011201	1.4 mm,3 mm,MSWR3(BK) ,N ,+ ,NYLOK		44
4	MCCH00	CAP,SCREW	MCCH0079702	MG210 SILVER	Silver	8
4	MCCH01	CAP,SCREW	MCCH0078302	MG210 SILVER	Silver	7
4	MHFD00	HINGE,FOLDER	MHFD0005901	Pi5.8 5Kgf, CAN Type, Prexco(Head R1.0)	Deep Silver	25
4	MIDA00	INSULATOR,LCD	MIDA0021701	MG210 LCD INSULATOR	Black	
4	MIDA01	INSULATOR,LCD	MIDA0022501	331S, INSULATOR LCD	Black	
4	MTAB00	TAPE,PROTECTION	MTAB0103801	MG210 PHONE PROTECTION TAPE	Black	
4	MTAB02	TAPE,PROTECTION	MTAB0103901	MG210 MAIN WINDOW PROTECTION TAPE	Black	
4	MWAC00	WINDOW,LCD	MWAC0065101	MG210	Black	55
3	ACGM00	COVER ASSY,REAR	ACGM0070002	MG210 SILVER	Silver	
4	MCJN00	COVER,REAR	MCJN0051702	MG210 SILVER	Silver	13
4	MGAD00	GASKET,SHIELD FORM	MGAD0109501	MG210 REAR GASKET SHIELD FOAM	Black	24
4	MGAD01	GASKET,SHIELD FORM	MGAD0112501	MG210 I/O CONN. GASKET	Black	21
4	MIDZ00	INSULATOR	MIDZ0087201	REAR INSULATOR(UP)	Black	28
4	MIDZ01	INSULATOR	MIDZ0087301	REAR INSULATOR(DOWN)	Black	27
4	MLAB00	LABEL,A/S	MLAB0001102	C2000 USASV DIA 4.0	White	
4	MPBZ00	PAD	MPBZ0121901	MG210 REAR PAD	Black	33
3	MBJA00	BUTTON,DIAL	MBJA0020902	MG210 SILVER	Silver	5
3	MCCE00	CAP,RECEPTACLE	MCCE0030301	CAP,RECEPTACLE (common use)	Dark Gray	11
3	MCCF00	CAP,MOBILE SWITCH	MCCF0034702	MG210 SILVER	Silver	10
3	MLAK00	LABEL,MODEL	MLAK0006901			
5	ADCA00	DOME ASSY,METAL	ADCA0050601	MG210 METAL DOME ASS'Y (MAIN)	Black	20
5	MGAD00	GASKET,SHIELD FORM	MGAD0109701	MG210 PCB EARJACK GASKET SHIELD FOAM	Apple Green	

<Main component>

Note: This Chapter is used for reference, Part order is ordered by SBOM standard on GCSC

Level	Location No.	Description	Part Number	Specification	Color	Remark
4	SACY00	PCB ASSY,FLEXIBLE	SACY0043701			41
5	SACB00	PCB ASSY, FLEXIBLE,INSERT	SACB0028601			
6	BAT1	BATTERY,CELL,LITHIUM	SBCL0001001	3 V,1.2 mAh,COIN ,MATUESHITA Backup BATTERY (ML414/F9D)		
5	SACE00	PCB ASSY,FLEXIBLE,SMT	SACE0038401			
6	SACC00	PCB ASSY,FLEXIBLE,SMT BOTTOM	SACC0021801			
7	CN2	CONNECTOR,FFC/FPC	ENQY0010401	41 PIN,.3 mm,ETC , ,H=1.2		
7	CN3	CONNECTOR, BOARD TO BOARD	ENBY0015701	34 PIN,0.4 mm,STRAIGHT ,AU ,0.9MM HEIGHT MALE		
6	SACD00	PCB ASSY,FLEXIBLE,SMT TOP	SACD0031101			
7	C1	CAP,CHIP,MAKER	ECZH0000826	27 pF,50V ,J ,NP0 ,TC ,1005 ,R/TP		
7	C2	CAP,CERAMIC,CHIP	ECCH0000182	0.1 uF,10V ,K ,X5R ,HD ,1005 ,R/TP		
7	C3	CAP,CERAMIC,CHIP	ECCH0000110	10 pF,50V,D,NP0,TC,1005,R/TP		
7	C4	CAP,CERAMIC,CHIP	ECCH0000110	10 pF,50V,D,NP0,TC,1005,R/TP		
7	C5	CAP,CERAMIC,CHIP	ECCH0004904	1 uF,6.3V ,K ,X5R ,TC ,1005 ,R/TP		
7	C6	CAP,CERAMIC,CHIP	ECCH0004904	1 uF,6.3V ,K ,X5R ,TC ,1005 ,R/TP		
7	LD1	DIODE,LED,CHIP	EDLH0003401	RED, GREEN ,ETC ,R/TP ,SIZE 1315 , GSM DUAL LED		
7	R1	RES,CHIP	ERHY0000202	4.7 ohm,1/16W,J,1005,R/TP		
7	R2	RES,CHIP	ERHY0000172	68 ohm,1/16W ,F ,1005 ,R/TP		
7	R3	RES,CHIP	ERHY0000220	100 ohm,1/16W,J,1005,R/TP		
7	R4	RES,CHIP	ERHY0000201	0 ohm,1/16W,J,1005,R/TP		
7	R5	RES,CHIP	ERHY0000201	0 ohm,1/16W,J,1005,R/TP		
6	SPCY00	PCB,FLEXIBLE	SPCY0071301	POLYI , 0.5mm,MULTI-5 ,		
4	SJMY00	VIBRATOR,MOTOR	SJMY0006506	3 V,0.08 A,10*3.45 ,17mm		54
4	SUSY00	SPEAKER	SUSY0018401	ASSY ,8 ohm,91 dB,17 mm,		46
4	SVLM00	LCD MODULE	SVLM0018201	MAIN ,128*128 ,35.78*40.05*2.8 ,65k ,CSTN ,TM ,S-44206D ,Single		30
4	SNGF00	ANTENNA,GSM,FIXED	SNGF0014501	4.0:1 ,-8.5 dBd, ,GSM850/GSM900/DCS1800 Internal Pb-Free		29
3	GMEY00	SCREW MACHINE,BIND	GMEY0011201	1.4 mm,3 mm,MSWR3(BK) ,N ,+ ,NYLOK		
3	SAFY00	PCB ASSY,MAIN	SAFY0163201			
4	SAFB00	PCB ASSY,MAIN,INSERT	SAFB0054501			
5	SPKY00	PCB,SIDEKEY	SPKY0030201	POLYI , 0.2mm,DOUBLE ,		43
4	SAFF00	PCB ASSY,MAIN,SMT	SAFF0085201			

11. EXPLODED VIEW & REPLACEMENT PART LIST

Level	Location No.	Description	Part Number	Specification	Color	Remark
5	MLAB00	LABEL,A/S	MLAB0000601	HUMIDITY STICKER		
5	MLAC00	LABEL,BARCODE	MLAC0003301	EZ LOOKS(use for PCB ASSY MAIN(hardware))		
5	SAFC00	PCB ASSY,MAIN,SMT BOTTOM	SAFC0068101			
6	C100	CAP,CERAMIC,CHIP	ECCH0000110	10 pF,50V,D,NP0,TC,1005,R/TP		
6	C101	CAP,CHIP,MAKER	ECZH0000816	12 pF,50V ,J ,NP0 ,TC ,1005 ,R/TP		
6	C102	CAP,CERAMIC,CHIP	ECCH0000110	10 pF,50V,D,NP0,TC,1005,R/TP		
6	C103	CAP,CERAMIC,CHIP	ECCH0000182	0.1 uF,10V ,K ,X5R ,HD ,1005 ,R/TP		
6	C104	CAP,CERAMIC,CHIP	ECCH0000182	0.1 uF,10V ,K ,X5R ,HD ,1005 ,R/TP		
6	C105	CAP,CERAMIC,CHIP	ECCH0000182	0.1 uF,10V ,K ,X5R ,HD ,1005 ,R/TP		
6	C106	CAP,CERAMIC,CHIP	ECCH0000182	0.1 uF,10V ,K ,X5R ,HD ,1005 ,R/TP		
6	C107	CAP,CERAMIC,CHIP	ECCH0000110	10 pF,50V,D,NP0,TC,1005,R/TP		
6	C108	CAP,CHIP,MAKER	ECZH0001421	2.2 uF,6.3V ,K ,X5R ,HD ,1608 ,R/TP		
6	C109	CAP,CERAMIC,CHIP	ECCH0000182	0.1 uF,10V ,K ,X5R ,HD ,1005 ,R/TP		
6	C110	CAP,CERAMIC,CHIP	ECCH0000133	220 pF,50V ,K ,X7R ,HD ,1005 ,R/TP		
6	C112	CAP,CERAMIC,CHIP	ECCH0000182	0.1 uF,10V ,K ,X5R ,HD ,1005 ,R/TP		
6	C113	CAP,CERAMIC,CHIP	ECCH0000182	0.1 uF,10V ,K ,X5R ,HD ,1005 ,R/TP		
6	C114	CAP,CERAMIC,CHIP	ECCH0000182	0.1 uF,10V ,K ,X5R ,HD ,1005 ,R/TP		
6	C115	CAP,CERAMIC,CHIP	ECCH0000182	0.1 uF,10V ,K ,X5R ,HD ,1005 ,R/TP		
6	C116	CAP,CERAMIC,CHIP	ECCH0000182	0.1 uF,10V ,K ,X5R ,HD ,1005 ,R/TP		
6	C117	CAP,CERAMIC,CHIP	ECCH0000182	0.1 uF,10V ,K ,X5R ,HD ,1005 ,R/TP		
6	C118	CAP,CERAMIC,CHIP	ECCH0000182	0.1 uF,10V ,K ,X5R ,HD ,1005 ,R/TP		
6	C119	CAP,CERAMIC,CHIP	ECCH0000182	0.1 uF,10V ,K ,X5R ,HD ,1005 ,R/TP		
6	C120	CAP,CERAMIC,CHIP	ECCH0000182	0.1 uF,10V ,K ,X5R ,HD ,1005 ,R/TP		
6	C121	CAP,CERAMIC,CHIP	ECCH0000182	0.1 uF,10V ,K ,X5R ,HD ,1005 ,R/TP		
6	C122	CAP,CERAMIC,CHIP	ECCH0000182	0.1 uF,10V ,K ,X5R ,HD ,1005 ,R/TP		
6	C123	CAP,CERAMIC,CHIP	ECCH0000182	0.1 uF,10V ,K ,X5R ,HD ,1005 ,R/TP		
6	C124	CAP,CERAMIC,CHIP	ECCH0006201	4.7 uF,6.3V ,K ,X5R ,TC ,1608 ,R/TP		
6	C125	CAP,CERAMIC,CHIP	ECCH0007901	10 uF,4V ,M ,X5R ,TC ,1608 ,R/TP		
6	C126	CAP,CERAMIC,CHIP	ECCH0004904	1 uF,6.3V ,K ,X5R ,TC ,1005 ,R/TP		
6	C127	CAP,CERAMIC,CHIP	ECCH0006201	4.7 uF,6.3V ,K ,X5R ,TC ,1608 ,R/TP		
6	C128	CAP,CERAMIC,CHIP	ECCH0006201	4.7 uF,6.3V ,K ,X5R ,TC ,1608 ,R/TP		
6	C129	CAP,CERAMIC,CHIP	ECCH0006201	4.7 uF,6.3V ,K ,X5R ,TC ,1608 ,R/TP		
6	C130	CAP,CERAMIC,CHIP	ECCH0006201	4.7 uF,6.3V ,K ,X5R ,TC ,1608 ,R/TP		
6	C131	CAP,CERAMIC,CHIP	ECCH0006201	4.7 uF,6.3V ,K ,X5R ,TC ,1608 ,R/TP		
6	C132	CAP,CERAMIC,CHIP	ECCH0006201	4.7 uF,6.3V ,K ,X5R ,TC ,1608 ,R/TP		
6	C133	CAP,CERAMIC,CHIP	ECCH0006201	4.7 uF,6.3V ,K ,X5R ,TC ,1608 ,R/TP		

Level	Location No.	Description	Part Number	Specification	Color	Remark
6	C200	CAP,CERAMIC,CHIP	ECCH0000179	22 nF,16V ,K ,X5R ,HD ,1005 ,R/TP		
6	C201	CAP,CERAMIC,CHIP	ECCH0000179	22 nF,16V ,K ,X5R ,HD ,1005 ,R/TP		
6	C202	CAP,CERAMIC,CHIP	ECCH0000143	1 nF,50V,K,X7R,HD,1005,R/TP		
6	C203	CAP,CERAMIC,CHIP	ECCH0000122	47 pF,50V,J,NP0,TC,1005,R/TP		
6	C204	CAP,CERAMIC,CHIP	ECCH0000161	33 nF,16V,K,X7R,HD,1005,R/TP		
6	C205	CAP,CERAMIC,CHIP	ECCH0000110	10 pF,50V,D,NP0,TC,1005,R/TP		
6	C206	CAP,CERAMIC,CHIP	ECCH0000122	47 pF,50V,J,NP0,TC,1005,R/TP		
6	C207	CAP,CERAMIC,CHIP	ECCH0000122	47 pF,50V,J,NP0,TC,1005,R/TP		
6	C208	CAP,CERAMIC,CHIP	ECCH0007801	4.7 uF,10V ,Z ,Y5V ,HD ,1608 ,R/TP		
6	C209	CAP,CERAMIC,CHIP	ECCH0007801	4.7 uF,10V ,Z ,Y5V ,HD ,1608 ,R/TP		
6	C210	CAP,CERAMIC,CHIP	ECCH0000179	22 nF,16V ,K ,X5R ,HD ,1005 ,R/TP		
6	C211	CAP,CERAMIC,CHIP	ECCH0000182	0.1 uF,10V ,K ,X5R ,HD ,1005 ,R/TP		
6	C212	CAP,CERAMIC,CHIP	ECCH0000182	0.1 uF,10V ,K ,X5R ,HD ,1005 ,R/TP		
6	C213	CAP,CERAMIC,CHIP	ECCH0000182	0.1 uF,10V ,K ,X5R ,HD ,1005 ,R/TP		
6	C214	CAP,CERAMIC,CHIP	ECCH0000182	0.1 uF,10V ,K ,X5R ,HD ,1005 ,R/TP		
6	C215	CAP,CERAMIC,CHIP	ECCH0000143	1 nF,50V,K,X7R,HD,1005,R/TP		
6	C216	CAP,CERAMIC,CHIP	ECCH0000182	0.1 uF,10V ,K ,X5R ,HD ,1005 ,R/TP		
6	C217	CAP,CERAMIC,CHIP	ECCH0000182	0.1 uF,10V ,K ,X5R ,HD ,1005 ,R/TP		
6	C218	CAP,CERAMIC,CHIP	ECCH0000155	10 nF,16V,K,X7R,HD,1005,R/TP		
6	C219	CAP,CERAMIC,CHIP	ECCH0006201	4.7 uF,6.3V ,K ,X5R ,TC ,1608 ,R/TP		
6	C220	CAP,CERAMIC,CHIP	ECCH0000122	47 pF,50V,J,NP0,TC,1005,R/TP		
6	C221	CAP,CERAMIC,CHIP	ECCH0006201	4.7 uF,6.3V ,K ,X5R ,TC ,1608 ,R/TP		
6	C222	CAP,CERAMIC,CHIP	ECCH0000122	47 pF,50V,J,NP0,TC,1005,R/TP		
6	C223	CAP,CERAMIC,CHIP	ECCH0007801	4.7 uF,10V ,Z ,Y5V ,HD ,1608 ,R/TP		
6	C224	CAP,CERAMIC,CHIP	ECCH0007801	4.7 uF,10V ,Z ,Y5V ,HD ,1608 ,R/TP		
6	C225	CAP,CERAMIC,CHIP	ECCH0000182	0.1 uF,10V ,K ,X5R ,HD ,1005 ,R/TP		
6	C226	CAP,CERAMIC,CHIP	ECCH0000182	0.1 uF,10V ,K ,X5R ,HD ,1005 ,R/TP		
6	C227	CAP,CERAMIC,CHIP	ECCH0000122	47 pF,50V,J,NP0,TC,1005,R/TP		
6	C228	CAP,CHIP,MAKER	ECZH0000826	27 pF,50V ,J ,NP0 ,TC ,1005 ,R/TP		
6	C229	CAP,CERAMIC,CHIP	ECCH0000122	47 pF,50V,J,NP0,TC,1005,R/TP		
6	C230	CAP,CERAMIC,CHIP	ECCH0000182	0.1 uF,10V ,K ,X5R ,HD ,1005 ,R/TP		
6	C231	CAP,CERAMIC,CHIP	ECCH0006201	4.7 uF,6.3V ,K ,X5R ,TC ,1608 ,R/TP		
6	C232	CAP,CERAMIC,CHIP	ECCH0000110	10 pF,50V,D,NP0,TC,1005,R/TP		
6	C233	CAP,TANTAL,CHIP	ECTH0001901	10 uF,6.3V ,M ,L_ESR ,1608 ,R/TP		
6	C235	CAP,CERAMIC,CHIP	ECCH0000122	47 pF,50V,J,NP0,TC,1005,R/TP		
6	C236	CAP,CERAMIC,CHIP	ECCH0000182	0.1 uF,10V ,K ,X5R ,HD ,1005 ,R/TP		
6	C237	CAP,CERAMIC,CHIP	ECCH0000122	47 pF,50V,J,NP0,TC,1005,R/TP		

11. EXPLODED VIEW & REPLACEMENT PART LIST

Level	Location No.	Description	Part Number	Specification	Color	Remark
6	C238	CAP,CERAMIC,CHIP	ECCH0000110	10 pF,50V,D,NP0,TC,1005,R/TP		
6	C240	CAP,CERAMIC,CHIP	ECCH0000120	39 pF,50V,J,NP0,TC,1005,R/TP		
6	C241	CAP,CERAMIC,CHIP	ECCH0000122	47 pF,50V,J,NP0,TC,1005,R/TP		
6	C242	CAP,CERAMIC,CHIP	ECCH0000110	10 pF,50V,D,NP0,TC,1005,R/TP		
6	C243	CAP,CERAMIC,CHIP	ECCH0000182	0.1 uF,10V ,K ,X5R ,HD ,1005 ,R/TP		
6	C244	CAP,CERAMIC,CHIP	ECCH0000110	10 pF,50V,D,NP0,TC,1005,R/TP		
6	C245	CAP,CERAMIC,CHIP	ECCH0006201	4.7 uF,6.3V ,K ,X5R ,TC ,1608 ,R/TP		
6	C247	CAP,CERAMIC,CHIP	ECCH0000110	10 pF,50V,D,NP0,TC,1005,R/TP		
6	C248	CAP,CHIP,MAKER	ECZH0000826	27 pF,50V ,J ,NP0 ,TC ,1005 ,R/TP		
6	C249	CAP,CERAMIC,CHIP	ECCH0000122	47 pF,50V,J,NP0,TC,1005,R/TP		
6	C250	CAP,CERAMIC,CHIP	ECCH0000110	10 pF,50V,D,NP0,TC,1005,R/TP		
6	C251	CAP,CHIP,MAKER	ECZH0000826	27 pF,50V ,J ,NP0 ,TC ,1005 ,R/TP		
6	C300	CAP,CERAMIC,CHIP	ECCH0000110	10 pF,50V,D,NP0,TC,1005,R/TP		
6	C301	CAP,CERAMIC,CHIP	ECCH0000110	10 pF,50V,D,NP0,TC,1005,R/TP		
6	C302	CAP,CERAMIC,CHIP	ECCH0000110	10 pF,50V,D,NP0,TC,1005,R/TP		
6	C303	CAP,CERAMIC,CHIP	ECCH0000122	47 pF,50V,J,NP0,TC,1005,R/TP		
6	C304	CAP,CERAMIC,CHIP	ECCH0000182	0.1 uF,10V ,K ,X5R ,HD ,1005 ,R/TP		
6	C305	CAP,CERAMIC,CHIP	ECCH0000122	47 pF,50V,J,NP0,TC,1005,R/TP		
6	C306	CAP,CERAMIC,CHIP	ECCH0000182	0.1 uF,10V ,K ,X5R ,HD ,1005 ,R/TP		
6	C307	CAP,CERAMIC,CHIP	ECCH0000182	0.1 uF,10V ,K ,X5R ,HD ,1005 ,R/TP		
6	C308	CAP,CERAMIC,CHIP	ECCH0000182	0.1 uF,10V ,K ,X5R ,HD ,1005 ,R/TP		
6	C309	CAP,CERAMIC,CHIP	ECCH0000182	0.1 uF,10V ,K ,X5R ,HD ,1005 ,R/TP		
6	C310	CAP,CERAMIC,CHIP	ECCH0004904	1 uF,6.3V ,K ,X5R ,TC ,1005 ,R/TP		
6	C311	CAP,CERAMIC,CHIP	ECCH0004904	1 uF,6.3V ,K ,X5R ,TC ,1005 ,R/TP		
6	C312	CAP,CERAMIC,CHIP	ECCH0004904	1 uF,6.3V ,K ,X5R ,TC ,1005 ,R/TP		
6	C313	CAP,CERAMIC,CHIP	ECCH0000122	47 pF,50V,J,NP0,TC,1005,R/TP		
6	C314	CAP,CERAMIC,CHIP	ECCH0004904	1 uF,6.3V ,K ,X5R ,TC ,1005 ,R/TP		
6	C315	CAP,CERAMIC,CHIP	ECCH0004904	1 uF,6.3V ,K ,X5R ,TC ,1005 ,R/TP		
6	C318	CAP,CERAMIC,CHIP	ECCH0000182	0.1 uF,10V ,K ,X5R ,HD ,1005 ,R/TP		
6	C319	CAP,CERAMIC,CHIP	ECCH0000187	150 pF,50V ,J ,NP0 ,TC ,1005 ,R/TP		
6	C320	CAP,CERAMIC,CHIP	ECCH0000115	22 pF,50V,J,NP0,TC,1005,R/TP		
6	C400	CAP,CERAMIC,CHIP	ECCH0000143	1 nF,50V,K,X7R,HD,1005,R/TP		
6	C401	CAP,CERAMIC,CHIP	ECCH0000182	0.1 uF,10V ,K ,X5R ,HD ,1005 ,R/TP		
6	C402	CAP,CHIP,MAKER	ECZH0000802	1 pF,50V ,C ,NP0 ,TC ,1005 ,R/TP		
6	C403	CAP,CHIP,MAKER	ECZH0000822	1.5 pF,50V ,C ,NP0 ,TC ,1005 ,R/TP		
6	C404	CAP,CHIP,MAKER	ECZH0000822	1.5 pF,50V ,C ,NP0 ,TC ,1005 ,R/TP		
6	C406	CAP,CERAMIC,CHIP	ECCH0000173	1.2 pF,16V ,B ,NP0 ,TC ,1005 ,R/TP		

Level	Location No.	Description	Part Number	Specification	Color	Remark
6	C407	CAP,CERAMIC,CHIP	ECCH0000173	1.2 pF,16V ,B ,NP0 ,TC ,1005 ,R/TP		
6	C408	CAP,CHIP,MAKER	ECZH0000802	1 pF,50V ,C ,NP0 ,TC ,1005 ,R/TP		
6	C409	CAP,CHIP,MAKER	ECZH0000802	1 pF,50V ,C ,NP0 ,TC ,1005 ,R/TP		
6	C410	CAP,CERAMIC,CHIP	ECCH0000122	47 pF,50V,J,NP0,TC,1005,R/TP		
6	C411	CAP,CHIP,MAKER	ECZH0003118	560 pF,50V ,K ,X7R ,HD ,1005 ,R/TP		
6	C412	CAP,CHIP,MAKER	ECZH0000802	1 pF,50V ,C ,NP0 ,TC ,1005 ,R/TP		
6	C413	CAP,CERAMIC,CHIP	ECCH0000143	1 nF,50V,K,X7R,HD,1005,R/TP		
6	C414	CAP,CERAMIC,CHIP	ECCH0000109	8 pF,50V,D,NP0,TC,1005,R/TP		
6	C415	CAP,CHIP,MAKER	ECZH0000830	33 pF,50V ,J ,NP0 ,TC ,1005 ,R/TP		
6	C416	CAP,CERAMIC,CHIP	ECCH0000113	18 pF,50V,J,NP0,TC,1005,R/TP		
6	C417	CAP,CHIP,MAKER	ECZH0000813	100 pF,50V ,J ,NP0 ,TC ,1005 ,R/TP		
6	C418	CAP,CHIP,MAKER	ECZH0000802	1 pF,50V ,C ,NP0 ,TC ,1005 ,R/TP		
6	C419	CAP,CERAMIC,CHIP	ECCH0000182	0.1 uF,10V ,K ,X5R ,HD ,1005 ,R/TP		
6	C420	CAP,CHIP,MAKER	ECZH0003118	560 pF,50V ,K ,X7R ,HD ,1005 ,R/TP		
6	C421	CAP,CERAMIC,CHIP	ECCH0000182	0.1 uF,10V ,K ,X5R ,HD ,1005 ,R/TP		
6	C422	CAP,CHIP,MAKER	ECZH0000813	100 pF,50V ,J ,NP0 ,TC ,1005 ,R/TP		
6	C423	CAP,TANTAL,CHIP,MAKER	ECTZ0000406	33 uF,10V ,M ,STD ,3216 ,R/TP		
6	C424	CAP,CHIP,MAKER	ECZH0000830	33 pF,50V ,J ,NP0 ,TC ,1005 ,R/TP		
6	C425	CAP,CHIP,MAKER	ECZH0000813	100 pF,50V ,J ,NP0 ,TC ,1005 ,R/TP		
6	C426	CAP,CHIP,MAKER	ECZH0000813	100 pF,50V ,J ,NP0 ,TC ,1005 ,R/TP		
6	C427	CAP,CERAMIC,CHIP	ECCH0000143	1 nF,50V,K,X7R,HD,1005,R/TP		
6	C429	CAP,CERAMIC,CHIP	ECCH0000101	.5 pF,50V ,C ,NP0 ,TC ,1005 ,R/TP		
6	C430	CAP,CHIP,MAKER	ECZH0000813	100 pF,50V ,J ,NP0 ,TC ,1005 ,R/TP		
6	C431	CAP,CERAMIC,CHIP	ECCH0000143	1 nF,50V,K,X7R,HD,1005,R/TP		
6	C432	CAP,CHIP,MAKER	ECZH0000813	100 pF,50V ,J ,NP0 ,TC ,1005 ,R/TP		
6	C433	CAP,CHIP,MAKER	ECZH0000826	27 pF,50V ,J ,NP0 ,TC ,1005 ,R/TP		
6	C434	CAP,CERAMIC,CHIP	ECCH0000901	2.2 pF,50V ,C ,NP0 ,TC ,1005 ,R/TP		
6	C435	CAP,CERAMIC,CHIP	ECCH0000184	2.7 pF,50V ,C ,NP0 ,TC ,1005 ,R/TP		
6	C436	CAP,CERAMIC,CHIP	ECCH0000143	1 nF,50V,K,X7R,HD,1005,R/TP		
6	C437	CAP,CERAMIC,CHIP	ECCH0000143	1 nF,50V,K,X7R,HD,1005,R/TP		
6	C438	CAP,CERAMIC,CHIP	ECCH0004904	1 uF,6.3V ,K ,X5R ,TC ,1005 ,R/TP		
6	C439	CAP,CERAMIC,CHIP	ECCH0000143	1 nF,50V,K,X7R,HD,1005,R/TP		
6	C440	CAP,CERAMIC,CHIP	ECCH0004904	1 uF,6.3V ,K ,X5R ,TC ,1005 ,R/TP		
6	C441	CAP,CERAMIC,CHIP	ECCH0004904	1 uF,6.3V ,K ,X5R ,TC ,1005 ,R/TP		
6	C442	CAP,CERAMIC,CHIP	ECCH0004904	1 uF,6.3V ,K ,X5R ,TC ,1005 ,R/TP		
6	CN200	CONN,JACK/PLUG, EARPHONE	ENJE0002301	3,5 PIN,G7000 EAR JACK 3 pole, 5 pin KSD		

11. EXPLODED VIEW & REPLACEMENT PART LIST

Level	Location No.	Description	Part Number	Specification	Color	Remark
6	CN300	CONNECTOR, BOARD TO BOARD	ENBY0015601	34 PIN,0.4 mm,STRAIGHT ,AU ,0.9MM HEIGHT		
6	CN301	CONNECTOR,I/O	ENRY0003501	24 PIN,0.5 mm,ANGLE , ,		
6	D200	DIODE,SWITCHING	EDSY0012101	US-FLAT ,30 V,1 A,R/TP ,2.5*1.25*0.6(t)		
6	D300	DIODE,SWITCHING	EDSY0005301	SC-70 ,80 V,0.1 A,R/TP ,		
6	D301	DIODE,TVS	EDTY0006701	CSP ,15 KV,200 mW,R/TP ,4 CHANNEL ESD ARRAY		
6	FB300	FILTER,BEAD,CHIP	SFBH0007102	10 ohm,1005 ,Ferrite Bead		
6	FB301	FILTER,BEAD,CHIP	SFBH0007102	10 ohm,1005 ,Ferrite Bead		
6	FL300	FILTER,EMI/POWER	SFEY0009401	SMD ,100ohm,30pF(total capacitance), Pb-free		
6	FL301	FILTER,EMI/POWER	SFEY0009401	SMD ,100ohm,30pF(total capacitance), Pb-free		
6	FL302	FILTER,EMI/POWER	SFEY0009401	SMD ,100ohm,30pF(total capacitance), Pb-free		
6	FL303	FILTER,EMI/POWER	SFEY0009401	SMD ,100ohm,30pF(total capacitance), Pb-free		
6	FL400	FILTER,SEPERATOR	SFAY0007201	850.900 ,1800.1900 ,4.0 dB,4.0 dB, dB, dB,ETC ,Quad band FEM		
6	J300	CONN,SOCKET	ENSY0016601	6 PIN,ETC , ,2.54 mm,H=2.5		
6	L200	INDUCTOR,CHIP	ELCH0005009	100 nH,J ,1005 ,R/TP ,		
6	L201	INDUCTOR,CHIP	ELCH0005009	100 nH,J ,1005 ,R/TP ,		
6	L202	INDUCTOR,CHIP	ELCH0005009	100 nH,J ,1005 ,R/TP ,		
6	L203	INDUCTOR,CHIP	ELCH0005009	100 nH,J ,1005 ,R/TP ,		
6	L300	INDUCTOR,CHIP	ELCH0005009	100 nH,J ,1005 ,R/TP ,		
6	L301	INDUCTOR,CHIP	ELCH0005009	100 nH,J ,1005 ,R/TP ,		
6	L400	INDUCTOR,CHIP	ELCH0009112	27 nH,J ,1005 ,R/TP ,chip coil		
6	L401	INDUCTOR,CHIP	ELCH0001408	6.8 nH,J ,1005 ,R/TP ,Pb Free		
6	L402	INDUCTOR,CHIP	ELCH0001427	2.2 nH,S ,1005 ,R/TP ,Pb Free		
6	L403	INDUCTOR,CHIP	ELCH0009112	27 nH,J ,1005 ,R/TP ,chip coil		
6	L404	INDUCTOR,CHIP	ELCH0009111	8.2 nH,J ,1005 ,R/TP ,chip coil		
6	L405	INDUCTOR,CHIP	ELCH0009107	7.5 nH,J ,1005 ,R/TP ,coil type		
6	L406	INDUCTOR,CHIP	ELCH0005002	2.7 nH,S ,1005 ,R/TP ,		
6	L407	INDUCTOR,CHIP	ELCH0001426	8.2 nH,J ,1005 ,R/TP ,PBFREE		
6	Q200	TR,FET,P-CHANNEL	EQFP0004201	2.9*1.9*0.8(t) ,.7 W,20 V,-6 A,R/TP ,NDC652P upgrade(substitution) item, Pb free		
6	Q300	TR,BJT,NPN	EQBN0007101	EMT3 ,0.15 W,R/TP ,LOW FREQUENCY		
6	Q301	TR,BJT,ARRAY	EQBA0002701	EMT6 ,150 mW,R/TP ,NPN, PNP, 150 mA		
6	R100	RES,CHIP	ERHY0000153	100K ohm,1/16W,F,1005,R/TP		
6	R101	RES,CHIP	ERHY0000153	100K ohm,1/16W,F,1005,R/TP		
6	R102	RES,CHIP	ERHY0000153	100K ohm,1/16W,F,1005,R/TP		
6	R103	RES,CHIP	ERHY0000287	220K ohm,1/16W,J,1005,R/TP		
6	R104	RES,CHIP	ERHY0000138	33K ohm,1/16W,F,1005,R/TP		

Level	Location No.	Description	Part Number	Specification	Color	Remark
6	R105	RES,CHIP	ERHY0000138	33K ohm,1/16W,F,1005,R/TP		
6	R106	RES,CHIP	ERHY0000153	100K ohm,1/16W,F,1005,R/TP		
6	R107	RES,CHIP	ERHY0000153	100K ohm,1/16W,F,1005,R/TP		
6	R108	RES,CHIP	ERHY0000261	10K ohm,1/16W,J,1005,R/TP		
6	R109	RES,CHIP	ERHY0000241	1K ohm,1/16W,J,1005,R/TP		
6	R110	RES,CHIP	ERHY0000261	10K ohm,1/16W,J,1005,R/TP		
6	R111	RES,CHIP	ERHY0000273	47K ohm,1/16W,J,1005,R/TP		
6	R112	RES,CHIP	ERHY0000153	100K ohm,1/16W,F,1005,R/TP		
6	R113	RES,CHIP	ERHY0000153	100K ohm,1/16W,F,1005,R/TP		
6	R114	RES,CHIP	ERHY0000261	10K ohm,1/16W,J,1005,R/TP		
6	R115	RES,CHIP	ERHY0000203	10 ohm,1/16W,J,1005,R/TP		
6	R116	RES,CHIP	ERHY0000280	100K ohm,1/16W,J,1005,R/TP		
6	R117	RES,CHIP	ERHY0000261	10K ohm,1/16W,J,1005,R/TP		
6	R118	RES,CHIP	ERHY0000201	0 ohm,1/16W,J,1005,R/TP		
6	R119	RES,CHIP	ERHY0000201	0 ohm,1/16W,J,1005,R/TP		
6	R120	RES,CHIP	ERHY0000261	10K ohm,1/16W,J,1005,R/TP		
6	R200	RES,CHIP,MAKER	ERHZ0000472	36 Kohm,1/16W ,J ,1005 ,R/TP		
6	R201	RES,CHIP	ERHY0000271	39K ohm,1/16W,J,1005,R/TP		
6	R202	RES,CHIP	ERHY0000282	120K ohm,1/16W,J,1005,R/TP		
6	R203	RES,CHIP	ERHY0000250	3.3K ohm,1/16W,J,1005,R/TP		
6	R204	RES,CHIP	ERHY0000201	0 ohm,1/16W,J,1005,R/TP		
6	R206	RES,CHIP	ERHY0000280	100K ohm,1/16W,J,1005,R/TP		
6	R209	RES,CHIP	ERHY0000205	15 ohm,1/16W,J,1005,R/TP		
6	R210	RES,CHIP	ERHY0000280	100K ohm,1/16W,J,1005,R/TP		
6	R211	RES,CHIP	ERHY0000241	1K ohm,1/16W,J,1005,R/TP		
6	R212	RES,CHIP	ERHY0000201	0 ohm,1/16W,J,1005,R/TP		
6	R213	RES,CHIP	ERHY0001102	0.2 ohm,1/4W ,F ,2012 ,R/TP		
6	R214	RES,CHIP	ERHY0000243	1.2K ohm,1/16W,J,1005,R/TP		
6	R215	RES,CHIP	ERHY0000203	10 ohm,1/16W,J,1005,R/TP		
6	R216	RES,CHIP	ERHY0000203	10 ohm,1/16W,J,1005,R/TP		
6	R217	RES,CHIP	ERHY0000241	1K ohm,1/16W,J,1005,R/TP		
6	R218	RES,CHIP	ERHY0000201	0 ohm,1/16W,J,1005,R/TP		
6	R219	RES,CHIP	ERHY0000261	10K ohm,1/16W,J,1005,R/TP		
6	R220	RES,CHIP	ERHY0000255	5.6K ohm,1/16W,J,1005,R/TP		
6	R221	RES,CHIP	ERHY0000273	47K ohm,1/16W,J,1005,R/TP		
6	R222	RES,CHIP	ERHY0000241	1K ohm,1/16W,J,1005,R/TP		
6	R223	RES,CHIP	ERHY0000208	22 ohm,1/16W,J,1005,R/TP		

Level	Location No.	Description	Part Number	Specification	Color	Remark
6	R224	RES,CHIP	ERHY0000208	22 ohm,1/16W,J,1005,R/TP		
6	R225	RES,CHIP	ERHY0000222	120 ohm,1/16W,J,1005,R/TP		
6	R226	RES,CHIP	ERHY0000241	1K ohm,1/16W,J,1005,R/TP		
6	R227	RES,CHIP	ERHY0000138	33K ohm,1/16W,F,1005,R/TP		
6	R228	RES,CHIP	ERHY0000266	22K ohm,1/16W,J,1005,R/TP		
6	R300	RES,CHIP	ERHY0000280	100K ohm,1/16W,J,1005,R/TP		
6	R301	RES,CHIP	ERHY0000220	100 ohm,1/16W,J,1005,R/TP		
6	R302	RES,CHIP	ERHY0000261	10K ohm,1/16W,J,1005,R/TP		
6	R303	RES,CHIP	ERHY0000273	47K ohm,1/16W,J,1005,R/TP		
6	R304	RES,CHIP	ERHY0000203	10 ohm,1/16W,J,1005,R/TP		
6	R305	RES,CHIP	ERHY0000203	10 ohm,1/16W,J,1005,R/TP		
6	R306	RES,CHIP	ERHY0000273	47K ohm,1/16W,J,1005,R/TP		
6	R307	RES,CHIP	ERHY0000241	1K ohm,1/16W,J,1005,R/TP		
6	R308	RES,CHIP	ERHY0000261	10K ohm,1/16W,J,1005,R/TP		
6	R309	RES,CHIP	ERHY0000265	20K ohm,1/16W,J,1005,R/TP		
6	R310	RES,CHIP	ERHY0000280	100K ohm,1/16W,J,1005,R/TP		
6	R311	RES,ARRAY,R	ERNR0000403	10000 ohm, ohm,8 PIN,J ,1/32 W ,SMD ,R/TP		
6	R312	RES,CHIP	ERHY0000271	39K ohm,1/16W,J,1005,R/TP		
6	R313	RES,CHIP	ERHY0000220	100 ohm,1/16W,J,1005,R/TP		
6	R314	RES,CHIP	ERHY0000220	100 ohm,1/16W,J,1005,R/TP		
6	R315	RES,CHIP	ERHY0000220	100 ohm,1/16W,J,1005,R/TP		
6	R320	RES,ARRAY,R	ERNR0000401	47 ohm, ohm,8 PIN,J ,1/32 W ,SMD ,R/TP		
6	R332	RES,ARRAY,R	ERNR0000401	47 ohm, ohm,8 PIN,J ,1/32 W ,SMD ,R/TP		
6	R333	RES,CHIP	ERHY0000207	20 ohm,1/16W,J,1005,R/TP		
6	R334	RES,CHIP	ERHY0000207	20 ohm,1/16W,J,1005,R/TP		
6	R335	RES,CHIP	ERHY0000241	1K ohm,1/16W,J,1005,R/TP		
6	R336	RES,CHIP	ERHY0000237	680 ohm,1/16W,J,1005,R/TP		
6	R337	RES,ARRAY,R	ERNR0000401	47 ohm, ohm,8 PIN,J ,1/32 W ,SMD ,R/TP		
6	R340	RES,CHIP	ERHY0000261	10K ohm,1/16W,J,1005,R/TP		
6	R400	RES,CHIP	ERHY0000220	100 ohm,1/16W,J,1005,R/TP		
6	R401	RES,CHIP	ERHY0000220	100 ohm,1/16W,J,1005,R/TP		
6	R402	RES,CHIP	ERHY0000220	100 ohm,1/16W,J,1005,R/TP		
6	R403	RES,CHIP	ERHY0000237	680 ohm,1/16W,J,1005,R/TP		
6	R404	RES,CHIP	ERHY0000239	820 ohm,1/16W,J,1005,R/TP		
6	R405	RES,CHIP	ERHY0000239	820 ohm,1/16W,J,1005,R/TP		
6	R406	RES,CHIP	ERHY0000239	820 ohm,1/16W,J,1005,R/TP		
6	R407	RES,CHIP	ERHY0000239	820 ohm,1/16W,J,1005,R/TP		

Level	Location No.	Description	Part Number	Specification	Color	Remark
6	R408	RES,CHIP	ERHY0000220	100 ohm,1/16W,J,1005,R/TP		
6	R409	RES,CHIP	ERHY0000229	300 ohm,1/16W,J,1005,R/TP		
6	R410	RES,CHIP	ERHY0000206	18 ohm,1/16W,J,1005,R/TP		
6	R411	RES,CHIP	ERHY0000229	300 ohm,1/16W,J,1005,R/TP		
6	R412	RES,CHIP	ERHY0000201	0 ohm,1/16W,J,1005,R/TP		
6	R413	RES,CHIP	ERHY0000201	0 ohm,1/16W,J,1005,R/TP		
6	R414	RES,CHIP	ERHY0008201	24 ohm,1/16W ,J ,1005 ,R/TP		
6	R415	RES,CHIP	ERHY0000226	220 ohm,1/16W,J,1005,R/TP		
6	R416	RES,CHIP	ERHY0000201	0 ohm,1/16W,J,1005,R/TP		
6	R417	RES,CHIP	ERHY0000226	220 ohm,1/16W,J,1005,R/TP		
6	R418	RES,CHIP	ERHY0000263	15K ohm,1/16W,J,1005,R/TP		
6	R419	THERMISTOR	SETY0006501	NTC ,22000 ohm,SMD ,1005, ECTH 1005 Series, Pb Free		
6	R420	RES,CHIP	ERHY0000289	270K ohm,1/16W,J,1005,R/TP		
6	R421	RES,CHIP	ERHY0000237	680 ohm,1/16W,J,1005,R/TP		
6	R422	RES,CHIP	ERHY0000254	4.7K ohm,1/16W,J,1005,R/TP		
6	SW400	CONN,RF SWITCH	ENWY0002301	ANGLE ,SMD ,0.8 dB,		
6	U100	IC	EUSY0285001	BGA ,143 PIN,R/TP ,IOTA Shrink ABB		
6	U101	IC	EUSY0155201	179GHH PBGA ,179 PIN,R/TP ,CALYPSO / DIGITAL BB CHIP, Pb Free		
6	U200	IC	EUSY0111601	32-PIN QFN ,32 PIN,R/TP ,MA-3 / 40 TONES / FM + WAVEFORM TABLE		
6	U201	IC	EUSY0226302	FBGA ,64 PIN,ETC ,128M NOR+64M UTRAM / UTRAM-SSE / PB FREE		
6	U202	IC	EUSY0262901	MICRO FOOT ,10 PIN,R/TP ,0.25 Ohm Dual SPDT Analog Switch, Pb Free		
6	U203	IC	EUSY0198601	SOT-666 ,6 PIN,R/TP ,Single SPDT Analog Switch		
6	U300	IC	EUSY0238702	TSOPJW-12 ,12 PIN,R/TP ,3PORT Charge Pump(AAT2154 Low cost version)		
6	U400	IC	EUSY0223202	5.0*5.0 ,32 PIN,R/TP ,AERO11 TRANSCEIVER, D Version		
6	U401	PAM	SMPY0008901	35 dBm,55 %,2 A,-50 dBc,25 dB,6.0 * 6.0 * 1.4 ,SMD ,GSM QUAD PAM		
6	U402	IC	EUSY0161702	US-8 ,8 PIN,R/TP ,UHS TRIPLE BUFFER / 3.1 WIDE SIZE, Pb Free		
6	U403	IC	EUSY0232812	SON1612-6 ,6 PIN,R/TP ,2.8V, 150mA LDO		
6	VA200	VARISTOR	SEVY0003901	5.5 V, ,SMD ,480pF, 1005		
6	VA201	VARISTOR	SEVY0003901	5.5 V, ,SMD ,480pF, 1005		
6	VA300	VARISTOR	SEVY0003901	5.5 V, ,SMD ,480pF, 1005		
6	VA301	VARISTOR	SEVY0003901	5.5 V, ,SMD ,480pF, 1005		
6	X100	X-TAL	EXXY0015601	.032768 MHz,20 PPM,7 pF,65000 ohm,SMD ,6.9*1.4*1.3		

11. EXPLODED VIEW & REPLACEMENT PART LIST

Level	Location No.	Description	Part Number	Specification	Color	Remark
6	X400	VCTCXO	EXSK0004901	26 MHz,2 PPM,10 pF,SMD ,3.2*2.5*1.2 ,		
5	SAFD00	PCB ASSY,MAIN,SMT TOP	SAFD0067301			
6	C316	CAP,CERAMIC,CHIP	ECCH0000182	0.1 uF,10V ,K ,X5R ,HD ,1005 ,R/TP		
6	C317	CAP,CERAMIC,CHIP	ECCH0000182	0.1 uF,10V ,K ,X5R ,HD ,1005 ,R/TP		
6	LD300	DIODE,LED,CHIP	EDLH0012101	BLUE ,1608 ,R/TP ,PBB-FREE		
6	LD301	DIODE,LED,CHIP	EDLH0012101	BLUE ,1608 ,R/TP ,PBB-FREE		
6	LD302	DIODE,LED,CHIP	EDLH0012101	BLUE ,1608 ,R/TP ,PBB-FREE		
6	LD303	DIODE,LED,CHIP	EDLH0012101	BLUE ,1608 ,R/TP ,PBB-FREE		
6	LD304	DIODE,LED,CHIP	EDLH0012101	BLUE ,1608 ,R/TP ,PBB-FREE		
6	LD305	DIODE,LED,CHIP	EDLH0012101	BLUE ,1608 ,R/TP ,PBB-FREE		
6	LD306	DIODE,LED,CHIP	EDLH0012101	BLUE ,1608 ,R/TP ,PBB-FREE		
6	LD307	DIODE,LED,CHIP	EDLH0012101	BLUE ,1608 ,R/TP ,PBB-FREE		
6	LD308	DIODE,LED,CHIP	EDLH0012101	BLUE ,1608 ,R/TP ,PBB-FREE		
6	LD309	DIODE,LED,CHIP	EDLH0012101	BLUE ,1608 ,R/TP ,PBB-FREE		
6	LD310	DIODE,LED,CHIP	EDLH0012101	BLUE ,1608 ,R/TP ,PBB-FREE		
6	LD311	DIODE,LED,CHIP	EDLH0012101	BLUE ,1608 ,R/TP ,PBB-FREE		
6	LD312	DIODE,LED,CHIP	EDLH0012101	BLUE ,1608 ,R/TP ,PBB-FREE		
6	LD313	DIODE,LED,CHIP	EDLH0012101	BLUE ,1608 ,R/TP ,PBB-FREE		
6	MIC200	MICROPHONE	SUMY0010507	UNIT ,42 dB,4*1.35 ,SMD		
6	R316	RES,CHIP	ERHY0000225	200 ohm,1/16W,J,1005,R/TP		
6	R317	RES,CHIP	ERHY0000225	200 ohm,1/16W,J,1005,R/TP		
6	R318	RES,CHIP	ERHY0000225	200 ohm,1/16W,J,1005,R/TP		
6	R319	RES,CHIP	ERHY0000225	200 ohm,1/16W,J,1005,R/TP		
6	R321	RES,CHIP	ERHY0000274	51K ohm,1/16W,J,1005,R/TP		
6	R322	RES,CHIP	ERHY0000225	200 ohm,1/16W,J,1005,R/TP		
6	R323	RES,CHIP	ERHY0000225	200 ohm,1/16W,J,1005,R/TP		
6	R324	RES,CHIP	ERHY0000225	200 ohm,1/16W,J,1005,R/TP		
6	R325	RES,CHIP	ERHY0000225	200 ohm,1/16W,J,1005,R/TP		
6	R326	RES,CHIP	ERHY0000225	200 ohm,1/16W,J,1005,R/TP		
6	R327	RES,CHIP	ERHY0000225	200 ohm,1/16W,J,1005,R/TP		
6	R328	RES,CHIP	ERHY0000225	200 ohm,1/16W,J,1005,R/TP		
6	R329	RES,CHIP	ERHY0000225	200 ohm,1/16W,J,1005,R/TP		
6	R330	RES,CHIP	ERHY0000225	200 ohm,1/16W,J,1005,R/TP		
6	R331	RES,CHIP	ERHY0000225	200 ohm,1/16W,J,1005,R/TP		
6	R338	RES,CHIP	ERHY0000237	680 ohm,1/16W,J,1005,R/TP		
6	R341	RES,CHIP	ERHY0000237	680 ohm,1/16W,J,1005,R/TP		
6	R342	RES,CHIP	ERHY0000237	680 ohm,1/16W,J,1005,R/TP		

Level	Location No.	Description	Part Number	Specification	Color	Remark
6	R343	RES,CHIP	ERHY0000237	680 ohm,1/16W,J,1005,R/TP		
6	R344	RES,CHIP	ERHY0000237	680 ohm,1/16W,J,1005,R/TP		
6	R345	RES,CHIP	ERHY0000237	680 ohm,1/16W,J,1005,R/TP		
6	R346	RES,CHIP	ERHY0000237	680 ohm,1/16W,J,1005,R/TP		
6	R347	RES,CHIP	ERHY0000237	680 ohm,1/16W,J,1005,R/TP		
6	R348	RES,CHIP	ERHY0000237	680 ohm,1/16W,J,1005,R/TP		
6	R349	RES,CHIP	ERHY0000237	680 ohm,1/16W,J,1005,R/TP		
6	U301	IC	EUSY0129503	2x2 mm MLPD ,3 PIN,R/TP ,Hall Effect Switch, Pb Free		
5	SPFY00	PCB,MAIN	SPFY0118201	FR-4 , mm,BUILD-UP 8 ,		
5	WSYY00	SOFTWARE	WSYY0370001	MG210CP40FL-55-V10a-724-02 MAR 02 2006+2		

11.3 Accessory

Note: This Chapter is used for reference, Part order is ordered by SBOM standard on GCSC

Level	Location No.	Description	Part Number	Specification	Color	Remark
3	SBPL00	BATTERY PACK,LI-ION	SBPL0077901	3.7 V,830 mAh,1 CELL,PRISMATIC ,FG101 RUSSV423450, Innerpack		1
3	SGEY00	EAR PHONE/EAR MIKE SET	SGEY0003204	L1200 ,MONO TYPE		
3	SSAD00	ADAPTOR,AC-DC	SSAD0007837	FREE ,50 Hz,5.2 V,.8 A,CE, CB ,		

Note

Note