Service Manual

Model : L-06A

Internal Use Only

Service Manual

L-06A

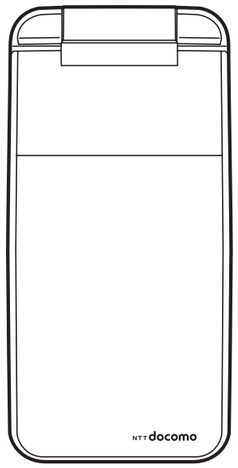

Date: July, 2009 / Issue 1.0

Table Of Contents

1. INTRODUCTION 5
1.1 Purpose 5
1.2 Regulatory Information 5

2. PERFORMANCE 7
2.1 System Overview 7
2.2 Usable environment 8
2.3 wireless characteristic 9
2.4 Current consumption 15
2.5 RSSI (Call (W2100 0dBm /EGSM Power level 19) : Cell Power) 15
2.6 Battery Bar 16
2.7 Sound pressure Level 17
2.8 SAR characteristic 18

3. TECHNICAL BRIEF 19
3.1 General Description 19
3.2 GSM Mode 22
3.3 UMTS Mode 26
3.4 LO Phase-locked Loop 31
3.5 Off-chip RF Components 32
3.6 Digital Baseband(DBB/MSM7200A) 47
3.7 Modem subsystem 50
3.8 Power Block 63
3.9 Memory interface 73
3.10 H/W Sub System 75
3.11 Main Features 93

4. TROUBLE SHOOTING 103
4.1 Checking VCXO Block 103
4.2 Checking Ant. SW Module Block 105
4.3 Checking UMTS Block 107
4.4 Checking GSM Block 116
4.5 Power ON Troubleshooting 120
4.6 Charger Troubleshooting 123
4.7 USB Troubleshooting 125
4.8 SIM Detect Troubleshooting 128
4.9 Keypad Backlight Troubleshooting 135
4.10 Folder Close / Open Troubleshooting 136
4.11 Swivel Close / Open Troubleshooting 137
4.12 Main LCD Troubleshooting 138
4.13 Receiver Path 139
4.14 Headset path 141
4.15 Speaker phone path 142
4.16 Main microphone 144
4.17 Headset microphone 146
4.18 Vibrator 148
4.19 1-seg 150
4.20 3AXIS Sensor 152
4.21 Touch Sensor 153
4.22 SD card operation 155
4.23 Light Sensor Operation 158
4.24 FeliCa 159

5. Downloading 161
5.1 Introduction 161
5.2 Downloading Procedure 162
5.3 Troubleshooting Download Errors 177
5.4 Caution 184

6. BLOCK DIAGRAM 185
6.1 GSM & UMTS RF Block 185
6.2 RF Component 186

7. CIRCUIT DIAGRAM 193

8. BGA Pin Map 203

9. PCB LAYOUT 213

10. Calibration & RF Auto Test Program (Hot Kimchi) 221
10.1 Confi guration of HOT KIMCHI 221
10.2 How to use HOT KIMCHI 223

11. EXPLODED VIEW & REPLACEMENT PART LIST 225
11.1 EXPLODED VIEW 225
11.2 Replacement Parts 227
11.3 Accessory 262

Copyright © 2009 LG Electronics. Inc. All right reserved.
Only for training and service purposes

LGE Internal Use Only

Copyright © 2009 LG Electronics. Inc. All right reserved.
Only for training and service purposes

1. INTRODUCTION

1.1 Purpose

This manual provides the information necessary to repair, calibration, description and download the features of this model.

1.2 Regulatory Information

A. Security

Toll fraud, the unauthorized use of telecommunications system by an unauthorized part (for example, persons other than your company's employees, agents, subcontractors, or person working on your company's behalf) can result in substantial additional charges for your telecommunications services.
System users are responsible for the security of own system. There are may be risks of toll fraud associated with your telecommunications system. System users are responsible for programming and configuring the equipment to prevent unauthorized use. The manufacturer does not warrant that this product is immune from the above case but will prevent unauthorized use of common-carrier telecommunication service of facilities accessed through or connected to it. The manufacturer will not be responsible for any charges that result from such unauthorized use.

B. Incidence of Harm

If a telephone company determines that the equipment provided to customer is faulty and possibly causing harm or interruption in service to the telephone network, it should disconnect telephone service until repair can be done. A telephone company may temporarily disconnect service as long as repair is not done.

C. Changes in Service

A local telephone company may make changes in its communications facilities or procedure. If these changes could reasonably be expected to affect the use of the phones or compatibility with the net work, the telephone company is required to give advanced written notice to the user, allowing the user to take appropriate steps to maintain telephone service.

D. Maintenance Limitations

Maintenance limitations on the phones must be performed only by the manufacturer or its authorized agent. The user may not make any changes and/or repairs expect as specifically noted in this manual.
Therefore, note that unauthorized alternations or repair may affect the regulatory status of the system and may void any remaining warranty.

Copyright © 2009 LG Electronics. Inc. All right reserved.
Only for training and service purposes

LGE Internal Use Only

E. Notice of Radiated Emissions

This model complies with rules regarding radiation and radio frequency emission as defined by local regulatory agencies. In accordance with these agencies, you may be required to provide information such as the following to the end user.

F. Pictures

The pictures in this manual are for illustrative purposes only; your actual hardware may look slightly different.

G. Interference and Attenuation

A phone may interfere with sensitive laboratory equipment, medical equipment, etc. Interference from unsuppressed engines or electric motors may cause problems.

H. Electrostatic Sensitive Devices

ATTENTION

Boards, which contain Electrostatic Sensitive Device (ESD), are indicated by the sign.
Following information is ESD handling:

- Service personnel should ground themselves by using a wrist strap when exchange system boards.
- When repairs are made to a system board, they should spread the floor with anti-static mat which is also grounded.
- Use a suitable, grounded soldering iron.
- Keep sensitive parts in these protective packages until these are used.
- When returning system boards or parts like EEPROM to the factory, use the protective package as described.

Copyright © 2009 LG Electronics. Inc. All right reserved.
Only for training and service purposes

2. PERFORMANCE

2.1 System Overview

Item	Specification
External form	WCDMA2100,800/GSM900/DCS1800/PCS1900 Swivel type Dual mode mobile phone
Size	110X52X15.4 [mmXmmXmm]
Weight	about 131g (Battery included)
Power	3.7V, 900mAh Li-Ion
Call time	Over 180 min. (WCDMA, Tx=10 dBm, Voice) 260 mA Over 140 min (GSM900, Tx= greatest output, Voice) 330 mA
Wait time	Over 300 hrs (WCDMA only mode, DRX = 2.56s) (under 3.0 mA) Over 250 hrs (GSM, Paging period = 5) (under 3.5 mA)
Charging time	In 3 hours (0° ~ 40°)
Antenna	Intenna
Main LCD	3.0"(480x800 Dot), 262K TFT Color LCD
Main LCD BL	White LED Back Light
Vibrator	Yes (10 pie coin type)
LED Indicator	Yes
C-Mic	Yes (SMD type)
Receiver	Yes (18X10)
Loud Speaker	Yes (18X10)
Ear phone jack	Yes (10 pin Japan standard)
SIM Socket	Yes (3.0V/1.8V)
Volume Key	Push Type Side Key(+,-)
Voice Key	Push Type
I/O Connector	ARIB Type A (10 pin + RF coaxial)

Copyright © 2009 LG Electronics. Inc. All right reserved.
Only for training and service purposes

LGE Internal Use Only

2.2 Usable environment

1) Phone using environment

Item	Spec.	Unit
Using Voltage	3.7 (Typ) (Shut Down: 3.28)	V
Using Temp.	-20 ~ + 60	℃
Store Temp.	-30 ~ + 85	℃
humidity	40 ~ 85	%

2) Using environment(Accessory)

Item	Spec.	Min	Typ.	Max	Unit
Input power	Using power	100	220	240	Vac

* TA support FOMA common adapter.

Copyright © 2009 LG Electronics. Inc. All right reserved.
Only for training and service purposes

2.3 wireless characteristic

wireless characteristic follows GSM Approval examination Specification(ETSI EN 300 607 11.10)

1) Frequency characteristic of transmission part - GSM Mode

NO	Item		GSM		DCS	
1	Conducted Spurious Emission	MS allocated Channel	100k ~ 1GHz	-39dBm	9k ~ 1GHz	-39dBm
					1G ~ 1710MHz	-33dBm
			1G ~ 12.75GHz	-33dBm	1710M ~ 1785MHz	-39dBm
					1785M ~ 12.75GHz	-33dBm
		Idle Mode	100k ~ 880MHz	-60dBm	100k ~ 880MHz	-60dBm
			880M ~ 915MHz	-62dBm	880M ~ 915MHz	-62dBm
			915M ~ 1000Mz	-60dBm	915M ~ 1000MHz	-60dBm
			1G ~ 1.71GHz	-50dBm	1G ~ 1.71GHz	-50dBm
			1.71G ~ 1.785GHz	-56dBm	1.71G ~ 1.785GHz	-56dBm
			1.785G ~ 12.75GHz	-50dBm	1.785G ~ 12.75GHz	-50dBm
	Radiated Spurious Emission	MS allocated Channel	30M ~ 1GHz	-36dBm	30M ~ 1GHz	-36dBm
					1G ~ 1710MHz	-30dBm
			1G ~ 4GHz	-30dBm	1710M ~ 1785MHz	-36dBm
					1785M ~ 4GHz	-30dBm
		Idle Mode	30M ~ 880MHz	-57dBm	30M ~ 880MHz	-57dBm
			880M ~ 915MHz	-59dBm	880M ~ 915MHz	-59dBm
			915M ~ 1000MHz	-57dBm	915M ~ 1000MHz	-57dBm
			1G ~ 1.71GHz	-47dBm	1G ~ 1.71GHz	-47dBm
			1.71G ~ 1.785GHz	-53dBm	1.71G ~ 1.785GHz	-53dBm
			1.785G~ 4GHz	-47dBm	1.785G~ 4GHz	-47dBm
2	Frequency Error		? ?0.1ppm		? ?0.1ppm	
3	Phase Error		? 5?(RMS)		? 5?(RMS)	
			? 20? (PEAK)		? 20? (PEAK)	

Copyright © 2009 LG Electronics. Inc. All right reserved.
Only for training and service purposes

LGE Internal Use Only

1) Frequency characteristic of transmission part -GSM Mode(continued)

NO	Item		GSM			DCS		
4	Frequency Error Under Multipath and Interference Condition		3dB below reference sensitivity			3dB below reference sensitivity		
			RA250: ±200Hz			RA250: ±250Hz		
			HT100: ±100Hz			HT100: ±250Hz		
			TU50: ±100Hz			TU50: ±150Hz		
			TU3: ±150Hz			TU1.5: ±200Hz		
5	Output RF Spectrum	Due to modulation	0 ~ 100kHz		+0.5dB	0 ~ 100kHz		+0.5dB
			200kHz		-30dB	200kHz		-30dB
			250kHz		-33dB	250kHz		-31dB
			400kHz		-60dB	400kHz		-33dB
			600 ~ 1800kHz		-66dB	600 ~ 1800kHz		-60dB
			1800 ~ 3000kHz		-69dB	1800 ~ 6000kHz		-60dB
			3000 ~ 6000kHz		-71dB	³ 6000kHz		-73dB
			³ 6000kHz		-77dB			
		Due to Switching transient	400kHz		-19dB	400kHz		-22dB
			600kHz		-21dB	600kHz		-24dB
			1200kHz		-21dB	1200kHz		-24dB
			1800kHz		-24dB	1800kHz		-27dB
7	Intermodulation attenuation		-			Frequency offset		800kHz
						Intermodulation product should be Less than 55dB below the level of Wanted signal		
8	Transmitter Output Power		Power control Level	Power (dBm)	Tolerance (dB)	Power control Level	Power (dBm)	Tolerance (dB)
			5	33	±3	0	30	±3
			6	31	±3	1	28	±3
			7	29	±3	2	26	±3
			8	27	±3	3	24	±3
			9	25	±3	4	22	±3
			10	23	±3	5	20	±3
			11	21	±3	6	18	±3
			12	19	±3	7	16	±3
			13	17	±3	8	14	±3
			14	15	±3	9	12	±4
			15	13	±3	10	10	±4
			16	11	±5	11	8	±4
			17	9	±5	12	6	±4
			18	7	±5	13	4	±4
			19	5	±5	14	2	±5
						15	0	±5
9	Burst timing		Mask IN			Mask IN		

Copyright © 2009 LG Electronics. Inc. All right reserved.
Only for training and service purposes

1) Frequency characteristic of transmission part -WCDMA Mode

NO	Item	Standard
1	Maximum Output Power	Class3: +24 dBm (+1/-3dB) Class4: +21dBm(±2dB)
2	Frequency Error	± 0.1ppm under
3	Open Loop Power control in uplink	In ± 9dB @normal, ±12dB @extreme
4	Inner Loop Power control in uplink	Adjust output(TPC command) cmd 1dB 2dB 3dB +1 +0.5/1.5 +1/3 +1.5/4 0 -0.5/+0.5 -0.5/+0.5 -0.5/+0.5 -1 -0.5/-1.5 -1/-3 -1.5/-4 group(10equal command group) +1 +8/+12 +16/+24
5	Minimum Output Power	-50 dBm Under (3.84MHz)
6	Out-of-synchronization handling of output power	Qin/Qout:DPCCH quality levels Toff@ DPCCH/Ior:-22->-28dB Ton@ DPCCH/Ior:-24->-18dB
7	Transmit OFF Power	-56 dBm Under (3.84M)
8	Transmit ON/OFF Time Mask	±25us PRACH,CPCH, uplink compressed mode
9	Change of TFC	±25us power varies according to the data rate DTX: DPCH off (minise interference between UE)
10	Power setting in uplink compressed	In ±3dB after14slots transmission gap)
11	Occupied Bandwidth(OBW)	5 MHz Under (99%)
12	Spectrum emission Mask	-35-15 (Δf-2.5) dBc @Δf=2.5~3.5MHz, 30k
		-35-1*(Δf-3.5) dBc @Δf=3.5~7.5MHz,1M
		-39 10*(Δf-7.5) dBc @Δf=7.5~8.5MHz,1M
		-49 dBc @Δf=8.5~12.5MHz,1M
13	Adjacent Channel Leakage Ratio (ACLR)	33dB over @5MHz , ACP>-50dBm
		43dB over @10MHz , ACP>-50dBm

Copyright © 2009 LG Electronics. Inc. All right reserved.
Only for training and service purposes

LGE Internal Use Only

1) Frequency characteristic of transmission part -WCDMA Mode(continued)

14	Spurious Emission *:addition requirement	WCDMA 2100, 800	-36 dBm @f=9~150KHz, 1k BW
			-36 dBm @f=150KHz~30MHz, 10k
			-36 dBm @f=30~1000MHz, 100k
			-30 dBm @f=1~12.75GHz, 1M
		WCDMA 2100	-41 dBm* @1893.5~1919.6MHz, 300k
			-67 dBm* @925~935MHz, 100k
			-79 dBm* @935~960MHz, 100k
			-71 dBm* @1805~1880MHz, 100k
		WCDMA 800	-60 dBm* @869~894MHz, 3.84M
			-60 dBm* @1930~1990MHz, 3.84M
			-60 dBm* @2110~2155MHz, 3.84M
15	Transmit Intermodulation		-31 dBc @5MHz,Interferer -40dBc
			-41 dBc @10MHz,Interferer -40dBc
16	Error Vector Magnitude(EVM)		under 17.5% (>-20dBm) (@12.2k, 1DPDCH+1DPCCH)
17	Peak code domain error		under -15 dB @SF=4, 768kbps, multi-code transmission

Copyright © 2009 LG Electronics. Inc. All right reserved.
Only for training and service purposes

2) Frequency characteristic of reception part - GSM Mode

NO	Item		GSM	DCS
1	Sensitivity (TCH/FS Class II)		-105dBm	-105dBm
2	Co-Channel Rejection (TCH/FS Class II, RBER, TUhigh/FH)		C/Ic= 7dB	C/Ic= 7dB
3	Adjacent Channel Rejection	200kHz	C/Ia1= -12dB	C/Ia1= -12dB
		400kHz	C/Ia2= -44dB	C/Ia2= -44dB
4	Intermodulation Rejection		Wanted Signal: -98dBm	Wanted Signal: -96dBm
			1'st interferer: -44dBm	1'st interferer: -44dBm
			2'nd interferer: -45dBm	2'nd interferer: -44dBm
5	Blocking Response (TCH/FS Class II, RBER)		Wanted Signal: -101dBm Unwanted Signal: Depend on freq.	Wanted Signal: -101dBm Unwanted Signal: Depend on freq.

Copyright © 2009 LG Electronics. Inc. All right reserved.
Only for training and service purposes

LGE Internal Use Only

2) Frequency characteristic of reception part - WCDMA Mode

NO	Item		Standard
18	Reference Sensivitivity Level		-106.7dBm under (3.84M)
19	Maximum Input Level		over -25 dBm (3.84 MHz) -44dBm/3.84MHz(DPCH_Ec) UE@ +20dBm output power(class3)
20	Adjacent Channel Selectivity(ACS)		over 33dB UE@ +20dBm output power(class3)
21	In-band Blocking		-56 dBm/3.84MHz @10MHz UE@ +20dBm output power(class3)
			-44 dBm/3.84MHz @15MHz UE@ +20dBm output power(class3)
22	Out-band Blocking		-44 dBm/3.84MHz @f=2050~2095 & 2185~2230 MHz , band a) UE@ =20dBm output power(class3)
			-30 dBm/3.84MHz @f=2025~2050 & 2230~2255 MHz, band a) UE@ +20dBm output power(class3)
			-15 dBm/3.84MHz @f=1~2025 & 2255~12500 MHz, band a) UE@ +20dBm output power(class3)
23	Spurious Response		-44 dBm CW UE@ +20dBm output power(class3)
24	Intermodulation Characteristic		-46 dBm CW@10MHz & -46dBm/3.84MHz @20MHz UE@ +20dBm output power(class3)
25	Spurious Emission	WCDMA 2100, 800	-57 dBm @f=9KHz~1GHz, 100k BW
			-47 dBm @f=1~12.75GHz, 1M
		WCDMA 2100	-60 dBm @f=1920~1980MHz, 3.84MHz
			-60 dBm @f=2110~2170MHz, 3.84MHz
		WCDMA 800	-60 dBm @f=824~849MHz, 3.84MHz
			-60 dBm @f=869~894MHz, 3.84MHz

Copyright © 2009 LG Electronics. Inc. All right reserved.
Only for training and service purposes

2.4 Current consumption

Current consumption characteristic is demand of NTT docomo.(capacity of battery : 3.7V 900mAh)
(VT measurement, condition : Speaker off, LCD backlight On)

	Static Stand-by	Voice Call	VT
WCDMA	300 Hours (3mA) (DRX=2.56)	180 Min (260mA) (Tx=10dBm)	80 Min (550mA) (Tx=10dBm)
GSM	250 Hours (3.5mA) (Paging period = 5)	140 Min (330mA) (Tx=Max)	

2.5 RSSI (Call (W2100 0dBm /EGSM Power level 19) : Cell Power)

	WCDMA	**GSM**
BAR 3 ->2	-102.5 ± 2 dBm	-95 ± 2 dBm
BAR 2 ->1	-105.5 ± 2 dBm	-100 ± 2 dBm
BAR 1 ->0	-107.5 ± 2 dBm	-105 ± 2 dBm
Out of area	< -113 ± 2 dBm	Followed Network Notification

Copyright © 2009 LG Electronics. Inc. All right reserved.
Only for training and service purposes

LGE Internal Use Only

2.6 Battery Bar

Indication	Voltage	
	During Idle state	During Call state
BAR 3 -> 2 (call maintenance over 40min)	3.72V ± 0.05V	3.62V ± 0.05V
BAR 2 -> 1 (call maintenance over 10min)	3.62V ± 0.05V	3.52V ± 0.05V
BAR 1 -> 0 (Icon Blinking)	3.30V ± 0.05V	3.30V ± 0.05V
Low battery message	BAR 1 -> 0	
Low battery pop-up	BAR 2 -> 1, display one time	
Power OFF during call	-	80s after Low battery message
Power OFF at stand-by	60s after Low battery message	-

Copyright © 2009 LG Electronics. Inc. All right reserved.
Only for training and service purposes

2.7 Sound pressure Level

.

	NO	examination item		Examination standard	
ACOUSTIC AIR	1	Sending Loudness Rating (SLR)	M/S	NOM	14±3dB
				MAX	
	2	Sending Frequency Response (SFR)		MAX	MASK IN
	3	Receiving Loudness Rating (RLR)		NOM	-4±3dB
				MAX	-15±3dB
	4	Receiving Frequency Response (RFR)		MAX	MASK IN
	5	Side Tone Masking Rating (STMR)		NOM	over 17dB
				MAX	
	6	Echo Loss (EL)		NOM	over 40dB
				MAX	
	7	Idle Noise-Sending (INS)		NOM	under -64dBm0p
				MAX	
	8	Idle Noise-Receiving (INR)		NOM	under -54dBPA
				MAX	under -57dBPA
ACOUSTIC AIR	9	Sending Loudness Rating (SLR)	Head set	NOM	8±3dB
				MAX	
	10	Receiving Loudness Rating (RLR)		NOM	-1±3dB
				MAX	-12±3dB
	11	Side Tone Masking Rating (STMR)		NOM	over 25dB
				MAX	
	12	Echo Loss (EL)		NOM	over 40dB
				MAX	
	13	Idle Noise-Sending (INS)		NOM	under -55dBm0p
				MAX	
	14	Idle Noise-Receiving (INR)		NOM	under -45dBPA
				MAX	under -40dBPA

Copyright © 2009 LG Electronics. Inc. All right reserved.
Only for training and service purposes

LGE Internal Use Only

2.8 SAR characteristic

Band	WCDAM 2100	WCDMA 800	GSM900	GSM1800	GSM1900
Conducted Power [dBm]	22.5	22.5	32.5	29.5	29.5
SAR(10g)[mW/g]	under 1.6	under 1.6	under 1.6	under 1.6	under 1.6

Copyright © 2009 LG Electronics. Inc. All right reserved.
Only for training and service purposes

3. TECHNICAL BRIEF

3.1 General Description

The L-06A supports UMTS-800, UMTS-2100, GSM-900, DCS-1800, and PCS-1900 based GSM/GPRS/UMTS. All receivers and the UMTS transmitter use the radioOne[1]Zero-IF architecture to eliminate intermediate frequencies, directly converting signals between RF and baseband. The tri-band GSM transmitters use a baseband-to-IF upconversion followed by an offset phase-locked loop that translates the GMSK-modulated or 8-PSK-modulated signal to RF.

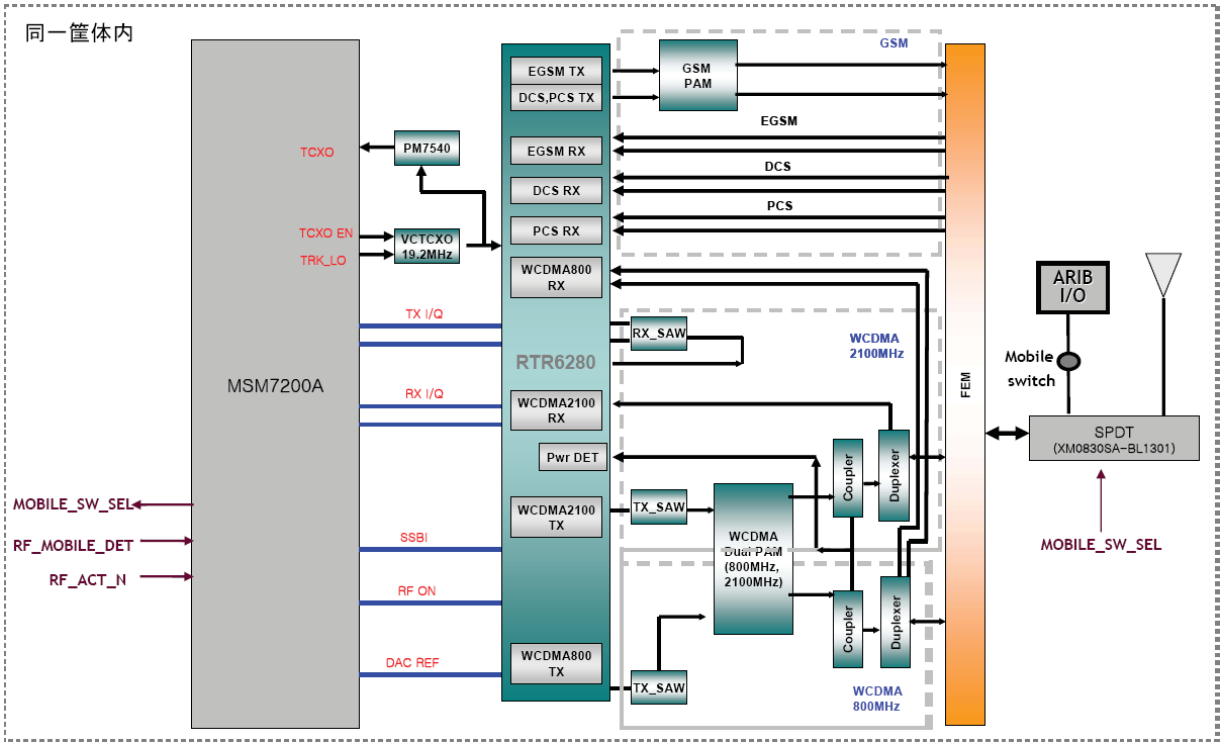

Fig 3.1-1 Block diagram of RF part

[1] QUALCOMM's branded chipset that implements a Zero-IF radio architecture.

Copyright © 2009 LG Electronics. Inc. All right reserved.
Only for training and service purposes

LGE Internal Use Only

3. TECHNICAL BRIEF

A generic, high-level functional block diagram of L-06A is shown in Figure 3-1. One antenna collects base station forward link signals and radiates handset reverse link signals. The antenna connects with receive and transmit paths through a FEM(Front End Module) (plus two duplexers for UMTS high-band and low-band operations).

The UMTS receive paths each include an LNA, an RF band-pass filter, and a downconverter that translate the signal directly from RF-to-baseband using radioOne ZIF techniques.
The high-band UMTS receive path and low-band path are accommodated in the RTR6280 IC. The RFIC.s Rx analog baseband outputs, for the receive chains, connect to the MSM IC. The UMTS and GSM Rx baseband outputs share the same inputs to the MSM IC .

For the transmit chains, the RTR6280 IC directly translates the Tx baseband signals (from the MSM device) to an RF signal using an internal LO generated by integrated on-chip PLL and VCO. The RTR6280 IC outputs deliver fairly high-level RF signals that are first filtered by Tx SAWs and then amplified by their respective UMTS PAs. The high- and low-band UMTS RF transmit signals emerge from the RTR6280 transceiver.

In the GSM receive path, the received RF signals are applied through their band-pass filters and down-converted directly to baseband in the RTR6280 transceiver IC. These baseband outputs are shared with the UMTS receiver and routed to the MSM IC for further signal processing. .

The GSM transmit path employs one stage of up-conversion and, in order to improve efficiency, is divided into phase and amplitude components to produce an open-loop Polar topology:
1. The on-chip quadrature up-converter translates the GMSK-modulated signal or 8-PSK modulated signal, to a constant envelope phase signal at RF;
2. The amplitude-modulated (AM) component is applied to the ramping control pin of Polar power amplifier from a DAC within the MSM

Copyright © 2009 LG Electronics. Inc. All right reserved.
Only for training and service purposes

L-06A power supply voltages are managed and regulated by the PM7540 Power Management IC. This versatile device integrates all wireless handset power management, general housekeeping, and user interface support functions into a single mixed signal IC. It monitors and controls the external power source and coordinates battery recharging while maintaining the handset supply voltages using low dropout, programmable regulators.

The device's general housekeeping functions include an ADC and analog multiplexer circuit for monitoring on-chip voltage sources, charging status, and current flow, as well as user-defined off-chip variables such as temperature, RF output power, and battery ID. Various oscillator, clock, and counter circuits support IC and higher-level handset functions. Key parameters such as under-voltage lockout and crystal oscillator signal presence are monitored to protect against detrimental conditions.

Copyright © 2009 LG Electronics. Inc. All right reserved.
Only for training and service purposes

LGE Internal Use Only

3.2 GSM Mode

3.2.1 GSM Receiver

The Dual-mode L-06A's receiver functions are split between the three RFICs as follows:

■ UMTS-800, UMTS-2100, GSM-900, DCS-1800, and PCS-1900 modes use the RTR6280 IC only. Each mode has independent front-end circuits and down-converters, but they share common baseband circuits (with only one mode active at a time). All receiver control functions are beginning with SSBI-controlled parameters.

RF Front end consists of antenna, antenna switch module(LMSP43QL-771) which includes four RX saw filters(GSM850, GSM900, DCS and PCS). The antenna switch module allows multiple operating bands and modes to share the same antenna.

In L-06A, a common antenna connects to one of eight paths:

1) UMTS-800 Rx/Tx, 2) UMTS-1900 Rx/Tx, 3) GSM-900 Rx, 4) GSM-900 Tx,

5) DCS-1800 Rx, 6) PCS-1900 Rx, 7) DCS-1800 TX, 8) PCS-1900 TX.

UMTS operation requires simultaneous reception and transmission, so the UMTS Rx/Tx connection is routed to a duplexer that separates receive and transmit signals.

GSM850/GSM900, DCS, and PCS operation is time division duplexed, so only the receiver or transmitter is active at any time and a frequency duplexer is not required.

CONTROL LOGIC

Mode	Vc1	Vc2	Vc3	Vc4	Vdd
GSM850/900 Tx	High	High	Low	Low	2.65-2.85V
GSM1800/1900 Tx	High	Low	Low	Low	2.65-2.85V
GSM850 Rx	Low	High	High	Low	2.65-2.85V
GSM900 Rx	Low	Low	High	Low	2.65-2.85V
GSM1800 Rx	Low	High	Low	Low	2.65-2.85V
GSM1900 Rx	Low	Low	Low	Low	2.65-2.85V
UMTS1	Low	Low	High	High	2.65-2.85V
UMTS2	Low	High	Low	High	2.65-2.85V
UMTS3	Low	Low	Low	High	2.65-2.85V

High : 1.4 - Vdd (V)
Low : 0 - 0.4 (V)

Table 3.2-1 Antenna Switch Module Control logic

Copyright © 2009 LG Electronics. Inc. All right reserved.
Only for training and service purposes

The GSM900, DCS, and PCS receiver inputs of RTR6280 are connected directly to the transceiver front-end circuits(filters and antenna switch module). GSM900, DCS, and PCS receiver inputs use differential configurations to improve common-mode rejection and second-order non-linearity performance. The balance between the complementary signals is critical and must be maintained from the RF filter outputs all the way into the IC pins. The RTR6280 input stages include MSM-controlled gain adjustments that maximize receiver dynamic range.

Since GSM900, DCS, and PCS signals are time-division duplex (the handset can only receive or transmit at one time), switches are used to separate Rx and Tx signals in place of frequency duplexers – this is accomplished in the switch module.

. The amplifier outputs drive the RF ports of the quadrature RF-to-baseband downconverters. The downconverted baseband outputs are multiplexed and routed to lowpass filters (one I and one Q) having passband and stopband characteristics suitable for GMSK or 8-PSK processing. These filter circuits include DC offset corrections. The filter outputs are buffered and passed on to the MSM7200A IC for further processing.

Copyright © 2009 LG Electronics. Inc. All right reserved.
Only for training and service purposes

LGE Internal Use Only

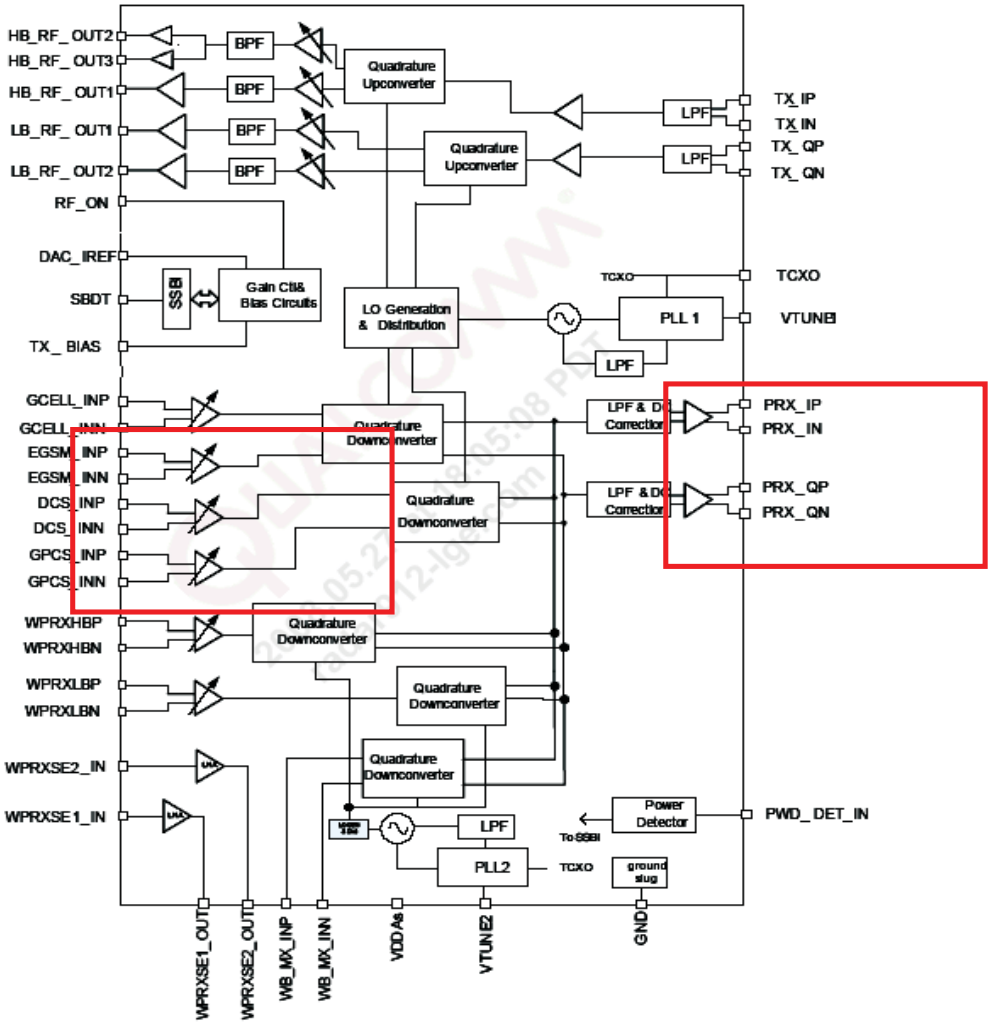

Fig 3.2-1 RTR6280 RX feature

Copyright © 2009 LG Electronics. Inc. All right reserved.
Only for training and service purposes

3.2.2 GSM Transmitter

The RTR6280 transmitter outputs(HB_RF_OUT1 and LB_RF_OUT1)include on-chip output matching inductors. 50ohm output impedance is achieved by adding a series capacitor at the output pins. The capacitor value may be optimized for specific applictions and PCB characteristics based on pass-band symmetry about the band center frequency, the suggested starting value is shown in Figure3.2.

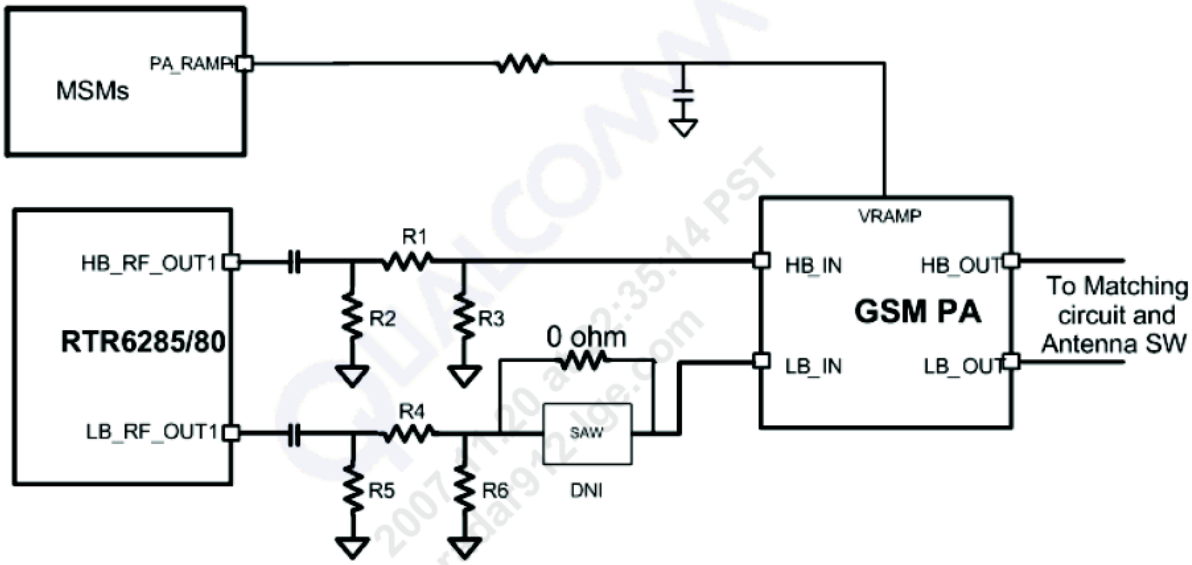

Figure 3.2-2 GSM Transmitter matching

The RTR6280 IC is able to support GSM 850/1900 and GSM 1800/1900 mode transmitting.
This design guideline shows a quad-band GSM application.

Both high-band and low band outputs are followed by resistive pads to ensure that the load Presented to the outputs remains close to 50ohm. The low-band GSM. Tx sSAW can be eliminated because ETSI spec requires mid channels to pass RX Band noise only.

Copyright © 2009 LG Electronics. Inc. All right reserved.
Only for training and service purposes

LGE Internal Use Only

3.3 UMTS Mode

3.3.1 Receiver

The UMTS duplexer receiver outputs are routed to LNA circuits within the RTR6280 device.
The RTR6285/RTR6280 receive paths include four WCDMA Rx signal paths(two single-ended and two differential) for one UMTS low-band and three UMTS high-bands.

Copyright © 2009 LG Electronics. Inc. All right reserved.
Only for training and service purposes

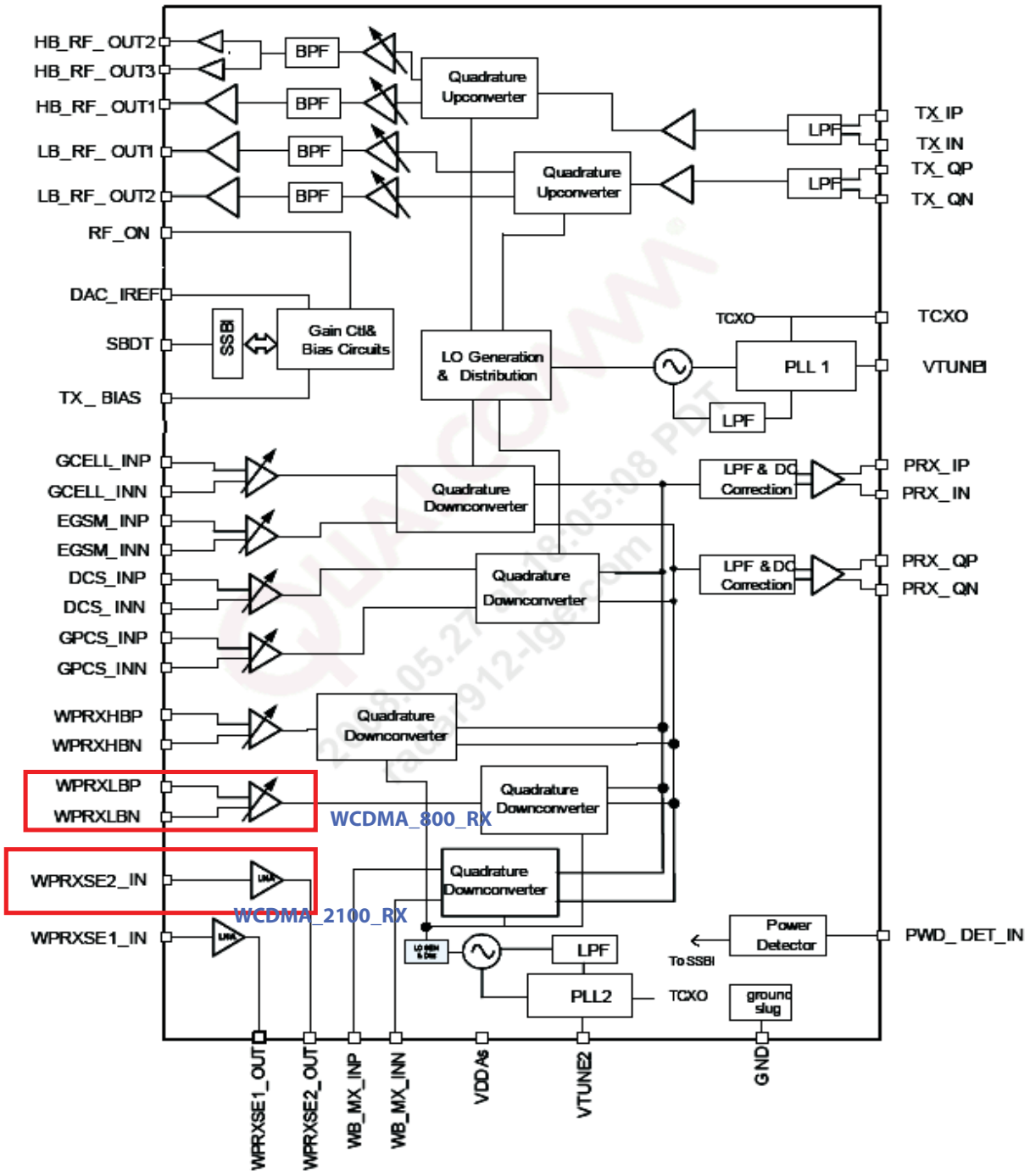

Figure 3.3-1 RTR6280 IC functional block diagram

Copyright © 2009 LG Electronics. Inc. All right reserved.
Only for training and service purposes

LGE Internal Use Only

The two RTR6285/RTR6280 UMTS single-ended inputs accept its UMTS 2100/1900/1800/1700 input signal from the handset RF front-end filters. The UMTS Rx inputs are provided with onchip LNAs that amplify the signal before second-stage filters that provide differential signal to a shared downconverter. This second-stage input is configured differentially to optimize secondorder inter-modulation and common mode rejection performance. The gain of the UMTS front-end amplifier and the UMTS second-stage differential amplifier are adjustable, under MSM control, to extend the dynamic range of the receivers.

The second-stage UMTS Rx amplifiers drive the RF ports of the quadrature RF-to-baseband downconverters. The downconverted UMTS Rx baseband outputs are routed to lowpass filters having passband and stopband characteristics suitable for UMTS Rx processing. These filter circuits allow DC-offset corrections, and their differential outputs are buffered to interface with the MSM IC.

The RTR6285/RTR6280 UMTS differential input paths stay on-chip; off-chip inter-stage filtering is not required. Other than this, the architecture is similar to the single-ended inputs. The UMTS duplexer receiver output is routed to LNA circuits within the RTR6280 device. UMTS LNA circuits(one for low-band UMTS and one for high-band UMTS path) separated from all other receive functions contained within the RTR6280 IC to improve mixer LO to RF isolation- a critical parameter in the ZIF architecture. Isolation is further improved using high-reverse isolation circuits in the LNA designs

Copyright © 2009 LG Electronics. Inc. All right reserved.
Only for training and service purposes

3.3.2 Transmitter

The RTR6285/RTR6280 transmit includes four transmit signal paths with five outputs (three high bands and two low bands) supporting multi-band and multi-mode GSM/GPRS/EDGE polar transmit and WCDMA/HSDPA transmit architectures. The transmit path begins with differential baseband signals (I and Q) from the MSM device.

These analog input signals are buffered, filtered by low-pass filters, amplified, and then applied to the quadrature upconverter mixers. The upconverter outputs are amplified by multiple variable gain stages that provide transmit AGC control. SSBI control from the MSM IC is used to generate the gain range control signal. The AGC outputs are then applied to the high-band and low-output driver amplifiers; the specified driver amplifier output level is achieved while supporting the GSM/EDGE and UMTS transmit standard's requirements for GSM ORFS, carrier and image suppression, WCDMA ACLR, spurious emissions, Rx-band noise, and so forth. Again, the upconverter LO signals are generated by circuits described in Section 1.2.3. These upconverters translate the polar GMSK-modulated or 8-PSK modulated baseband PM signals and/or WCDMA baseband signals directly to the RF signals, which are filtered and fed into the GSM/EDGE polar PA and/or WCDMA PA. The WCDMA TX power is coupled back to the RTR6285/RTR6280 internal power detector input pin, PWD_DET_IN, using a coupler for power measurement.

The low-band drive amplifiers are used to transmit the polar phase modulated (PM) signal for GSM/EDGE 850/900 while the high-band driver amplifiers are for the GSM/EDGE 1800/1900.

By using the radioOne architecture, the same high-band transmit path can be used to transmit the UMTS 2100/1900/1800/1700 signal, and the low-band transmit path can be used to transmit the UMTS 800/850/900 signal, depending on the application. The envelope path is used in polar mode of operation for GSM and EDGE. Input from the MSM IC, the baseband envelope (AM) signal, is applied directly to the ramp control pin of the GSM/EDGE polar PA to modulate the power supply of the PA so that the polar modulated GSM/EDGE signal in the MSM can be recovered and transmitted.

Copyright © 2009 LG Electronics. Inc. All right reserved.
Only for training and service purposes

LGE Internal Use Only

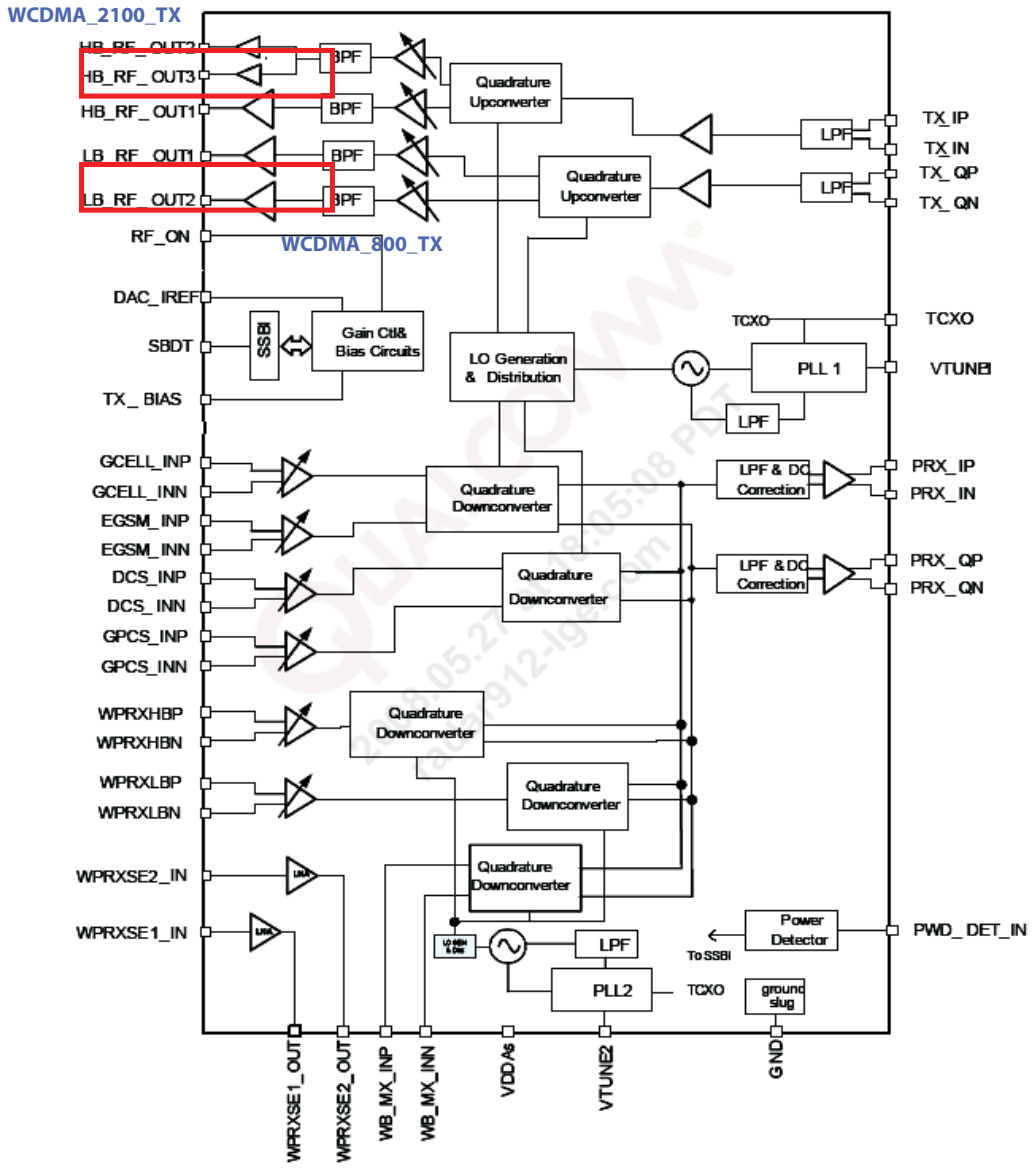

Fig.3.3-2 RTR6280 IC functional block diagram

Copyright © 2009 LG Electronics. Inc. All right reserved.
Only for training and service purposes

3.4 LO Phase-locked Loop

The integrated LO generation and distribution circuits are driven by internal VCOs to support various modes to yield highly flexible quadrature LO outputs that drive all GSM/EDGE, UMTS band and GPS upconverters and downconverters; with the help of these LO generation and distribution circuits, true zero-IF architecture is employed in all GSM and UMTS band receivers and transmitters to translate the signal directly from RF-to-baseband and from baseband-to-RF.

Two fully functional fractional-N synthesizers, including VCOs and loop filters, are integrated within the RTR6285/RTR6280 IC. In addition, the RTR6285 has a third synthesizer used for GPS operation. The first synthesizer (PLL1) in the RTR6285/6280 creates the transceiver LOs that support the UMTS transmitter, and all four GSM band receivers and transmitters including: GSM 850, GSM 900, GSM 1800, and GSM 1900. The second synthesizer (PLL2) in the RTR6285/RTR6280 IC provides the LO for the UMTS primary receiver. For the RTR6285 IC only, the second synthesizer also provides the LO for the secondary UMTS receiver. The third synthesizer (PLL3), only in the RTR6285 IC, provides the LO for the GPS receiver. An external TCXO input signal is required to provide the synthesizer frequency reference to which the PLL is phase and frequency locked.

The RTR6285/RTR6280 ICs integrate most of the PLL loop filter components on-chip except for three off-chip loop filter-series capacitors, which significantly reduces off-chip component requirement. With the integrated fractional-N PLL synthesizers, the RTR6285/RTR6280 ICs have the advantage of more flexible loop bandwidth control, fast lock time, and low-integrated phase error.

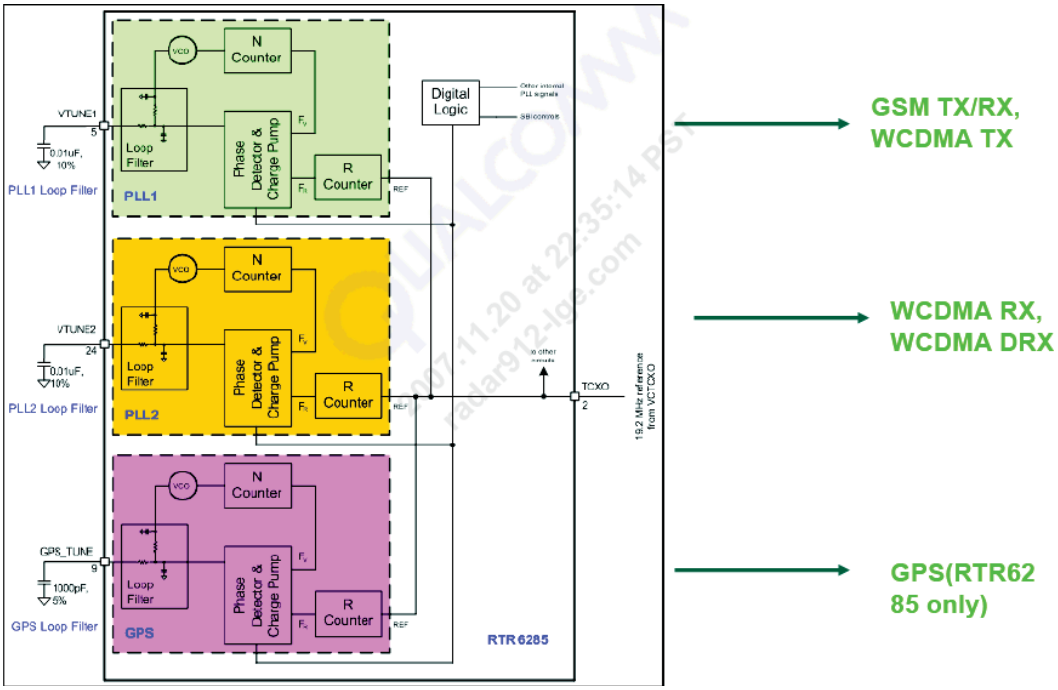

Fig.3.4-1. RTR6280 PLL's functional block diagram

Copyright © 2009 LG Electronics. Inc. All right reserved.
Only for training and service purposes

LGE Internal Use Only

3.5 Off-chip RF Components

3.5.1 Antenna switch module (FL106 : LMSP43QL-771)

CONTROL LOGIC

Mode	Vc1	Vc2	Vc3	Vc4	Vdd
GSM850/900 Tx	High	High	Low	Low	2.65-2.85V
GSM1800/1900 Tx	High	Low	Low	Low	2.65-2.85V
GSM850 Rx	Low	High	High	Low	2.65-2.85V
GSM900 Rx	Low	Low	High	Low	2.65-2.85V
GSM1800 Rx	Low	High	Low	Low	2.65-2.85V
GSM1900 Rx	Low	Low	Low	Low	2.65-2.85V
UMTS1	Low	Low	High	High	2.65-2.85V
UMTS2	Low	High	Low	High	2.65-2.85V
UMTS3	Low	Low	Low	High	2.65-2.85V

High : 1.4 - Vdd (V)
Low : 0 - 0.4 (V)

Table 3.5-1 FEM control table

Copyright © 2009 LG Electronics. Inc. All right reserved.
Only for training and service purposes

3.5.2 UMTS 2100 duplexer ; (FL101 : SAYFP1G95AA0B00)

■ Target Specification **Preliminary**

Item	Specification		
	-30 to 85°C	25±2°C	typ.
Nominal Center Frequency(fc)	1950MHz		
Insertion Loss (1920 to 1980MHz)	1.6 max.	1.5 max.	1.1 dB
Absolute Attenuation			
1) 0.1 to 240 MHz	40 dB min.	40 dB min.	57 dB
2) 470 to 770 MHz	32 dB min.	32 dB min.	39 dB
3) 810 to 895 MHz	30 dB min.	30 dB min.	36 dB
4) 921 to 960 MHz	30 dB min.	30 dB min.	36 dB
5) 1475.9 to 1500.9 MHz	30 dB min.	30 dB min.	35 dB
6) 1570 to 1580 MHz	35 dB min.	35 dB min.	39 dB
7) 1730 to 1790 MHz	17 dB min.	17 dB min.	24 dB
8) 1805 to 1880 MHz	1 dB min.	1 dB min.	3 dB
9) 2110 to 2170 MHz	40 dB min.	40 dB min.	50 dB
10) 2400 to 2500 MHz	22 dB min.	22 dB min.	27 dB
11) 2620 to 2690 MHz	15 dB min.	15 dB min.	22 dB
12) 3840 to 3960 MHz	20 dB min.	20 dB min.	24 dB
13) 5760 to 5940 MHz	17 dB min.	17 dB min.	23 dB
14) 7680 to 7920 MHz	10 dB min.	10 dB min.	17 dB
15) 9600 to 11880 MHz	1 dB min.	1 dB min.	5 dB
Ripple Deviation (1920 to 1980MHz)	0.8 dB max.	0.7 dB max.	0.4 dB
Ripple Deviation any 3.84MHz (1920 to 1980MHz)	0.5 dB max.	0.4 dB max.	0.1 dB
VSWR (1920 to 1980MHz)	2.0 max.	2.0 max.	1.4
ANT Port Matching Impedance(nominal)	50Ω//3.6nH		
Tx Port Matching Impedance(nominal)	50Ω		
Rx Port Matching Impedance(nominal)	50Ω		
Input Signal Level	0.8W(29dBm), 55°C,35000 hours WCDMAmodulation		

■ Target Specification **Preliminary**

Item	Specification		
	-30 to 85°C	25±2°C	typ.
Nominal Center Frequency(fc)	2140MHz		
Insertion Loss (2110 to 2170MHz)	2.1 max.	2.0 max.	1.6 dB
Absolute Attenuation			
1) 100 to 220 MHz	60 dB min.	60 dB min.	75 dB
2) 220 to 1085 MHz	40 dB min.	40 dB min.	48 dB
3) 1730 to 1790 MHz	43 dB min.	43 dB min.	46 dB
4) 1790 to 1920 MHz	40 dB min.	40 dB min.	48 dB
5) 1920 to 1980 MHz	48 dB min.	48 dB min.	55 dB
6) 2015 to 2025 MHz	20 dB min.	20 dB min.	41 dB
7) 2025 to 2050 MHz	6 dB min.	6 dB min.	17 dB
8) 2050 to 2075 MHz	2 dB min.	2 dB min.	4 dB
9) 2400 to 2500 MHz	35 dB min.	35 dB min.	41 dB
10) 3650 to 3770 MHz	35 dB min.	35 dB min.	45 dB
11) 4030 to 4150 MHz	43 dB min.	43 dB min.	47 dB
12) 4220 to 4340 MHz	40 dB min.	40 dB min.	53 dB
13) 5950 to 6130 MHz	25 dB min.	25 dB min.	33 dB
14) 6330 to 6510 MHz	20 dB min.	20 dB min.	33 dB
15) 7870 to 8110 MHz	15 dB min.	15 dB min.	22 dB
16) 8440 to 8680 MHz	10 dB min.	10 dB min.	20 dB
17) 8680 to 12750 MHz	5 dB min.	5 dB min.	18 dB
Ripple Deviation (2110 to 2170MHz)	0.8 dB max.	0.7 dB max.	0.3 dB
Ripple Deviation any 3.84MHz (2110 to 2170MHz)	0.5 dB max.	0.4 dB max.	0.2 dB
VSWR (2110 to 2170MHz)	2.0 max.	2.0 max.	1.7
ANT Port Matching Impedance(nominal)	50Ω//3.6nH		
Tx Port Matching Impedance(nominal)	50Ω		
Rx Port Matching Impedance(nominal)	50Ω		

■ Target Specification **Preliminary**

Item	Specification		
	-30 to 85°C	25±2°C	typ.
Isolation			
1) 1920 to 1980 MHz	53 dB min.	53 dB min.	55 dB
2) 2110 to 2170 MHz	44 dB min.	44 dB min.	51 dB
3) 3840 to 3960 MHz	38 dB min.	38 dB min.	47 dB

Copyright © 2009 LG Electronics. Inc. All right reserved.
Only for training and service purposes

LGE Internal Use Only

3.5.3 UMTS 800 duplexer (FL104 : B7683)

Characterisitcs TX - ANT		min.	typ. @ 25 °C	max.	
Center frequency	f_C		836.5		MHz
Maximum insertion attenuation					CTQ
@$f_{Carrier}$ 826.4 ... 846.6 MHz	α_{WCDMA} 1)		1.4	1.8	dB
Amplitude ripple (p-p)					
@$f_{Carrier}$ 826.4 ... 846.6 MHz	$\Delta\alpha_{WCDMA}$		0.2	1.0	dB
Error Vector Magnitude					
@$f_{Carrier}$ 826.4 ... 846.6 MHz	EVM 2)		1.1	2.5	%
Input VSWR (TX port)					
824.0 ... 849.0 MHz			1.5	1.9	
Output VSWR (ANT port)					
824.0 ... 849.0 MHz			1.5	1.8	

Characterisitcs TX - ANT		min.	typ. @ 25 °C	max.	
Attenuation	α				
0.3 ... 779.0 MHz		30	35		dB
779.0 ... 804.0 MHz		30	40		dB
@$f_{Carrier}$ 871.4 ... 891.6 MHz	α_{WCDMA} 1)	45	48		dB
1550.0 ... 1600.0 MHz		35	48		dB
1648.0 ... 1698.0 MHz		30	54		dB
2400.0 ... 2547.0 MHz		25	33		dB
2547.0 ... 4120.0 MHz		10	18		dB
4120.0 ... 4245.0 MHz		15	25		dB
4245.0 ... 5150.0 MHz		10	13		dB
5150.0 ... 5825.0 MHz		8	11		dB

Characterisitcs ANT - RX		min.	typ. @ 25 °C	max.	
Center frequency	f_C		881.5		MHz
Maximum insertion attenuation					CTQ
869.0 ... 894.0 MHz	α_{max}		1.9	2.7 1)	dB
@$f_{Carrier}$ 871.4 ... 891.6 MHz	α_{WCDMA} 2)		1.8	2.5	dB
Amplitude ripple (p-p)					
869.0 ... 894.0 MHz	$\Delta\alpha$		0.6	1.3	dB
@$f_{Carrier}$ 871.4 ... 891.6 MHz	$\Delta\alpha_{WCDMA}$		0.5	1.0	dB
Common mode rejection ratio CMRR					
869.0 ... 894.0 MHz		23	28		dB
Error Vector Magnitude					
@$f_{Carrier}$ 871.4 ... 891.6 MHz	EVM 3)		1.7	2.5	%
Input VSWR (ANT port)					
869.0 ... 894.0 MHz			1.5	1.8	
Output VSWR (RX port)					
869.0 ... 894.0 MHz			1.8	2.0	

Copyright © 2009 LG Electronics. Inc. All right reserved.
Only for training and service purposes

Characterisitcs ANT - RX					min.	typ. @ 25 °C	max.	
IMD product level limits[1)]								
at f_{TX} = 836.5 MHz f_{RX} = 881.5 MHz								
Blocker 1		45.0	MHz			-105	-101	dBm
Blocker 2		791.5	MHz			-121	-110	dBm
Blocker 3		1718.0	MHz			-120	-110	dBm
Attenuation				α				
0.3	...	779.0	MHz		40	56		dB
779.0	...	824.0	MHz		40	58		dB
@$f_{Carrier}$ 826.4	...	846.6	MHz	α_{WCDMA}[2)]	47	53		dB
849.0	...	854.0	MHz		23	50		dB
914.0	...	1693.0	MHz		23	37		dB
1693.0	...	1788.0	MHz		45	63		dB
1788.0	...	2400.0	MHz		40	55		dB
2400.0	...	2500.0	MHz		40	49		dB
2500.0	...	2682.0	MHz		40	45		dB
2682.0	...	5000.0	MHz		30	45		dB
5150.0	...	5825.0	MHz		30	47		dB
5825.0	...	6000.0	MHz		30	50		dB

Characterisitcs TX - RX					min.	typ. @ 25 °C	max.	
Isolation				α				
@$f_{Carrier}$ 826.4	...	846.6	MHz	α_{WCDMA}[1)]	50	57		dB
@$f_{Carrier}$ 871.4	...	891.6	MHz	α_{WCDMA}	45	49		dB

Copyright © 2009 LG Electronics. Inc. All right reserved.
Only for training and service purposes

LGE Internal Use Only

3.5.4 UMTS DUAL Power Amplifier modules (U104 : AWT6222R)

*** AWT6222R Description** : The AWT6222 meets the increasing demands for higher output power in dual-band UMTS handsets. The PA module pinout was chosen to enable handset manufacturers to easily route Vcc to both power amplifiers and simply control with a common Vmode pin. The device is manufactured on an advanced InGaP HBT MMIC technology offering state-of-the-art reliability, temperature stability and ruggedness. Teo operating modes provide optimum efficiency at high and medium/low power output levels, therby dramatically increasing handset talk and standby time.

The 3mm x 5mm x 1mm surface mount package incorporates matching networks optimized for output power, efficiency, and linearity in a 50Ω system.

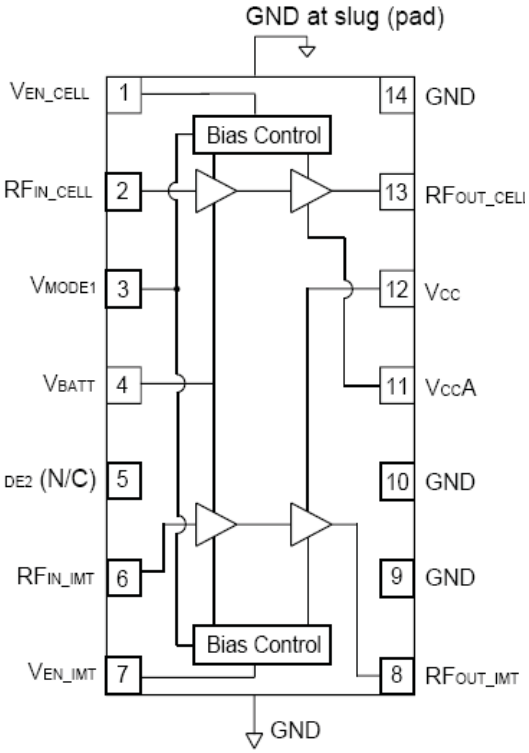

Fig. 3.5-1 AWT6222R Functional block diagram

PIN	NAME	DESCRIPTION
1	V_{EN_CELL}	Enable Voltage for Cell Bands
2	RF_{IN_CELL}	RF Input for Cell Bands
3	V_{MODE1}	Mode Control Voltage 1
4	V_{BATT}	Battery Voltage
5	V_{MODE2} (N/C)	No Connection
6	RF_{IN_IMT}	RF Input for IMT Band
7	V_{EN_MT}	Enable Voltage for IMT Band
8	RF_{OUT_IMT}	RF Output for IMT Band
9	GND	Ground
10	GND	Ground
11	$V_{CC}A$	Battery Voltage A
12	V_{CC}	Supply Voltage
13	RF_{OUT_CELL}	RF Output for Cell Band
14	GND	Ground

Fig. 3.5-2AWT6222R Pin description

Copyright © 2009 LG Electronics. Inc. All right reserved.
Only for training and service purposes

PARAMETER	MIN	TYP	MAX	UNIT	COMMENTS
Operating Frequency (f)	824 1920	-	849 1980	MHz	Japan and US Cellular IMT
Supply Voltage (V_{CC} and V_{BATT})	+3.2	+3.4	+4.2	V	
Enable Voltage (V_{EN})	+2.2 0	+2.4 -	+3.1 +0.5	V	PA "on" PA "shut down"
Mode Control Voltage (V_{MODE})	+2.2 0	+2.4 -	+3.1 +0.5	V	Low Bias Mode High Bias Mode
Cellular RF Output Power (P_{OUT}) 3GPP HSDPA Case A HSDPA Case B HSDPA Case C	 +28.5 (1) +27.5 (1) +26.5 (1) +26.0 (1)	 +29.0 +28.0 +27.0 +26.5	 - - - -	dBm	 $1/15 \leq \beta_c/\beta_d \leq 12/15$ $13/15 \leq \beta_c/\beta_d \leq 15/8$ $15/7 \leq \beta_c/\beta_d \leq 15/0$
IMT RF Output Power (P_{OUT}) 3GPP HSDPA Case A HSDPA Case B HSDPA Case C	 +28.0 (1) +27.0 (1) +26.0 (1) +25.5 (1)	 +28.5 +27.5 +26.5 +26.0	 - - - -	dBm	 $1/15 \leq \beta_c/\beta_d \leq 12/15$ $13/15 \leq \beta_c/\beta_d \leq 15/8$ $15/7 \leq \beta_c/\beta_d \leq 15/0$
Case Temperature (T_C)	-30	-	+85	°C	

The device may be operated safely over these conditions; however, parametric performance is guaranteed only over the conditions defined in the electrical specifications.

Notes:

(1) For operation at V_{CC} = +3.2 V, P_{OUT} is derated by 0.5 dB.

Copyright © 2009 LG Electronics. Inc. All right reserved.
Only for training and service purposes

LGE Internal Use Only

PARAMETER	MIN	TYP	MAX	UNIT	COMMENTS	
					P_{OUT}	V_{MODE1}
Gain	25.0 14.0	27.5 15.5	30.0 18.0	dB	+29 dBm +16 dBm	0 V 2.4 V
ACLR1 at 5 MHz offset (1)	- -	-41 -43	-38 -38	dBc	+29 dBm +16 dBm	0 V 2.4 V
ACLR2 at 10 MHz offset	- -	-59 -57	-48 -48	dBc	+29 dBm +16 dBm	0 V 2.4 V
Power-Added Efficiency (1)	37 17	41 20	- -	%	+29 dBm +16 dBm	0 V 2.4 V
Quiescent Current (Icq) Low Bias Mode	-	8	13	mA	V_{MODE1} = +2.4 V	
Mode Control Current	-	0.35	0.8	mA	through V_{MODE} pins, V_{MODE} = +2.4 V	
Enable Current	-	0.5	0.8	mA	through V_{ENABLE} pin	
BATT Current	-	3	5	mA	through V_{BATT} pin, V_{MODE1} = 2.4 V	
Leakage Current	-	<1	5	µA	V_{BATT} = +4.2 V, V_{CC} = +4.2 V, V_{ENABLE} = 0 V, V_{MODE1} = 0 V	
Noise in Receive Band(2) (Band 6)	- -	-135 -143	-133 -140	dBm/Hz	P_{OUT} = +29 dBm, V_{MODE1} = 0 V, P_{OUT} = +16 dBm, V_{MODE1} =2.4 V	
Noise in Receive Band(3) (Band 5)	- -	-135 -141	-133 -138	dBm/Hz	P_{OUT} = +29 dBm, V_{MODE1} = 0 V, P_{OUT} = +16 dBm, V_{MODE1} =2.4 V	
Harmonics 2fo 3fo, 4fo	- -	-43 -50	-35 -35	dBc	$P_{OUT} \leq$ +29 dBm	
Input Impedance	-	-	2:1	VSWR		
Spurious Output Level (all spurious outputs)	-	-	-70	dBc	See Note 4	
Load mismatch stress with no permanent degradation or failure	8:1	-	-	VSWR	Applies over full operating range	

Notes:
(1) ACLR and Efficiency measured at 836.5 MHz.
(2) 875 MHz to 885 MHz.
(3) 869 MHz to 894 MHz.
(4) P_{OUT} < +29 dBm, In-band load VSWR < 5:1, Out-of-band load VSWR < 10:1. Applies over all operating conditions.

Table 3.5-2 AWT6222R Band6(800MHz) Electrical specification

Copyright © 2009 LG Electronics. Inc. All right reserved.
Only for training and service purposes

PARAMETER	MIN	TYP	MAX	UNIT	COMMENTS	
					P_{OUT}	V_{MODE1}
Gain	24.5 12.0	27.0 14.0	29.0 16.0	dB	+28.5 dBm +16 dBm	0 V 2.4 V
ACLR1 at 5 MHz offset [1]	- -	-41 -43	-38 -38	dBc	+28.5 dBm +16 dBm	0 V 2.4 V
ACLR2 at 10 MHz offset	- -	-55 -56	-48 -48	dBc	+28.5 dBm +16 dBm	0 V 2.4 V
Power-Added Efficiency [1]	37 18	40 22	- -	%	+28.5 dBm +16 dBm	0 V 2.4 V
Quiescent Current (Icq) Low Bias Mode	-	8	13	mA	V_{MODE1} = +2.4 V	
Mode Control Current	-	0.35	0.8	mA	through V_{MODE} pins, V_{MODE} = +2.4 V	
Enable Current	-	0.3	0.8	mA	through V_{ENABLE} pin	
BATT Current	-	3	5	mA	through V_{BATT} pin, V_{MODE1} = 2.4 V	
Leakage Current	-	<1	5	µA	V_{BATT} = +4.2 V, V_{CC} = +4.2 V, V_{ENABLE} = 0 V, V_{MODE1} = 0 V	
Noise in Receive Band[2]	-	-137	-135	dBm/Hz	P_{OUT} = +28.5 dBm, V_{MODE1}= 0 V, V P_{OUT} = +16 dBm, V_{MODE1} = +2.4 V	
Harmonics 2fo 3fo, 4fo	- -	-43 -46	-35 -35	dBc		
Input Impedance	-	-	2:1	VSWR		
Spurious Output Level (all spurious outputs)	-	-	-70	dBc	See note 3	
Load mismatch stress with no permanent degradation or failure	8:1	-	-	VSWR	Applies over full operating range	

Notes:
(1) ACLR and Efficiency measured at 1950 MHz.
(2) 2110 MHz to 2170 MHz.
(3) POUT < +28.5 dBm, In-band load VSWR < 5:1, Out-of-band load VSWR < 10:1. Applies over all operating conditions.

Table 3.5-3 AWT6222R Band1(2100MHz) Electrical specification

Copyright © 2009 LG Electronics. Inc. All right reserved.
Only for training and service purposes

LGE Internal Use Only

3.5.5 Dual band GSM Power amplifier (U102 : SKY77318)

Product Description: The SKY77318 Power Amplifier Module (PAM) is designed in a low profile (1.2 mm), compact form factor for tri-band cellular handsets comprising EGSM (includes standard GSM900 band), DCS1800, and PCS1900 operation. The PAM also upports
Class 12 General Packet Radio Service (GPRS) multislot operation. The module consists of separate EGSM PA and DCS1800/PCS1900 PA blocks, impedance-matching circuitry for 50 Ω input and output impedances and a Power Amplifier Control (PAC) block with an internal
current-sense resistor. The custom BiCMOS integrated circuit provides the internal PAC function and interface circuitry. Fabricated onto a single Gallium Arsenide (GaAs) die, one Heterojunction Bipolar Transistor (HBT) PA block supports the EGSM bands and the other supports the DCS1800 and PCS1900 bands. Both PA blocks share common power supply pins to distribute current. The GaAs die, the Silicon (Si) die, and the passive components are mounted on a multi-layer laminate substrate. The assembly is encapsulated with plastic overmold. RF input and output ports of the SKY77318 are internally matched to a 50 Ω load to reduce the number of external components for a tri-band design. Extremely low leakage current (2.5 µA, typical) of the dual PA module maximizes handset standby time.
The SKY77318 also contains band-select switching circuitry to select EGSM (logic 0) or DCS/PCS (logic 1) as determined from the Band Select (BS) signal. In Figure 2 below, the BS pin selects the PA output (DCS/PCS_OUT or EGSM_OUT) and the Analog Power Control (VAPC) controls the level of output power. The VBATT pin connects to an internal
Current-sense resistor and interfaces to an integrated power amplifier control (iPAC™)
function, which is insensitive to variations in temperature, power supply, process, and input power. The ENABLE input allows initial turn-on of PAM circuitry to minimize battery drain.

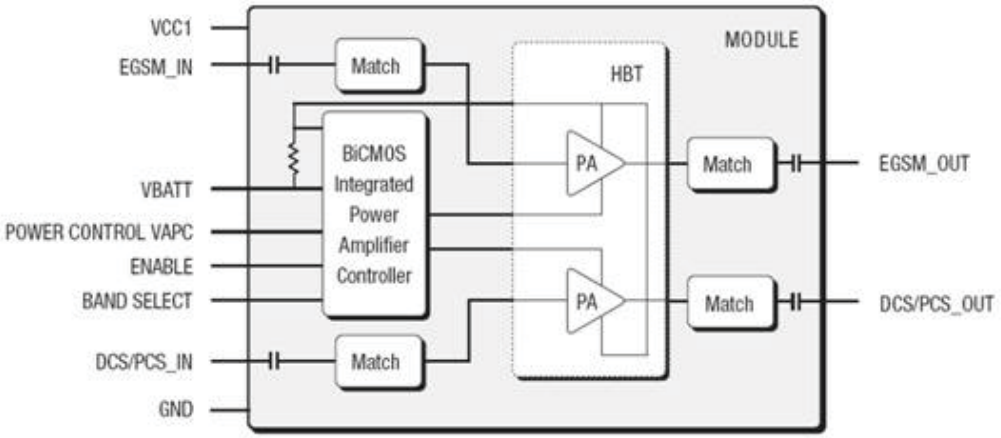

Fig 3.5-2 SKY77318 functional block diagram

Copyright © 2009 LG Electronics. Inc. All right reserved.
Only for training and service purposes

General						
Parameter	Symbol	Test Condition	Minimum	Typical	Maximum	Units
Supply voltage	V_{CC}	—	2.9	3.5	4.8	V
Power control impedance	Z_{APC}	—	—	200	—	kΩ
ENABLE control voltage Low	V_{PE}	—	–0.1	—	0.6	V
ENABLE control voltage High	V_{PE}	—	1.2	—	V_{CC}	
ENABLE current	I_{PE}	$V_{PE} \leq 3.0$ V	—	—	30	µA
Band Select control voltage Low	V_{BS}	—	–0.1	—	0.6	V
Band Select control voltage High	V_{BS}	—	1.2	—	V_{CC}	
Band Select current	I_{BS}	$V_{BS} \leq 3.0$ V	—	—	30	µA
Standby Mode Leakage current	I_Q	$V_{CC} \leq 4.5$ V $V_{APC} = 0.1$ V ENABLE ≤ 0.2 V $T_{CASE} = +25$ °C $P_{IN} \leq -60$ dBm	—	2.5	10	µA
V_{APC} Input Filter Bandwidth	$V_{APC\ FBW}$	—	85	120	150	kHz
V_{APC} Threshold	$V_{APC\ THCL}$	—	100	150	200	mV

Table 3.5-4 SKY77318 Electrical specification

3.5.6 UMTS Rx SAW filter (FL105)

FL105 – SAFEB2G14FA0F00 2110 ~ 2170MHz

An RF filter is located between the UMTS LNA and mixer. Insertion loss is important, but not as critical as losses before the LNA. The most important parameters of this component include:

■ Out-of-band rejection or attenuation levels, usually specified to meet these conditions:

□ Far out-of-band signals - ranging from DC up to the first band of particular concern and from the last band of particular concern to beyond three times the highest passband frequency.

□ Tx-band leakage - the transmitter channel power, although attenuated by the duplexer, still presents a cross-modulation threat in combination with Rx-band jammers. The RF filter must provide rejection of this Tx-band leakage.

□ Other frequencies of particular concern . bands known to include other wireless transmitters that may deliver significant power levels to the receiver input.

■ Phase and amplitude balance - the ZIF architecture requires well-balanced differential inputs to the RTR6285/80. This is accomplished by the RF filters which take a single-ended outputs from the ICs and provide differential outputs having nominal 180° phase separation. Phase and/or amplitude imbalance causes degraded common-mode rejection and second-order nonlinearity, so their requirements are specified jointly.

Copyright © 2009 LG Electronics. Inc. All right reserved.
Only for training and service purposes

LGE Internal Use Only

Item	Specifications	Typical value at 25±2°C (Reference value)
Nominal Center Frequency (fc)	2140MHz	–
Insertion Loss (2110...2170MHz) CTQ	2.0dB max.	1.6dB
Absolute Attenuation		
1) 0.1 ... 1920MHz	33dB min.	38dB
2) 1920 ... 1980MHz	43dB min.	48dB
3) 1980 ... 2050MHz	28dB min.	41dB
4) 2050 ... 2075MHz	15dB min.	24dB
5) 2230 ... 2255MHz	18dB min.	25dB
6) 2255 ... 2300MHz	23dB min.	26dB
7) 2300 ... 2480MHz	31dB min.	39dB
8) 2480 ... 2550MHz	35dB min.	38dB
9) 2550 ... 4030MHz	30dB min.	33dB
10) 4030 ... 4340MHz	40dB min.	52dB
11) 6330 ... 6510MHz	30dB min.	45dB
Ripple Deviation (2110...2170MHz)	1.0dB max.	0.3dB
Ripple Deviation Any 5MHz (2110...2170MHz)	0.3 dB	0.15dB
VSWR (2110...2170MHz)	1.7 max.	1.5
Amplitude Balance (2110...2170MHz) *1	±1.0dB max.	+0.6dB
Phase Balance (2110...2170MHz) *2	180±9deg. max.	180+5deg.

Table 3.5-5 SAFEB2G14FA0F00 Electrical specification

.

Copyright © 2009 LG Electronics. Inc. All right reserved.
Only for training and service purposes

3.5.7 VCTCXO (X10 : TG-5010LH-19.2MHz)

The Voltage Controlled Temperature Compensated Crystal Oscillator (VCTCXO) provides the reference frequency for all RFIC synthesizers as well as clock generation functions within the MSM6280 IC. The oscillator frequency is controlled by the MSM6280's TRK_LO_ADJ pulse density modulated signal in the same manner as the transmit gain control.

The filtered PDM signal results in an analog control signal into the VCTCXO tuning port whose voltage is directly proportional to the density of the digital bit stream. The MSM device varies the pulse density to change the analog control voltage that sets the oscillator frequency – all within a feedback control loop that minimizes handset frequency drift relative to the network.

3.5.8 SPDT (FL102 : XM0830SA-BL1301)

4. Electrical Specifications (Ta=25°C, V_{DD}=2.6V, $V_{CTL(H)}$=2.0V~V_{DD}, $V_{CTL(L)}$=0V)

Symbol	Parameter	Conditions	Min.	Typ.	Max.	Unit
I_{DD}	Current Consumption	-	-	80	200	μA
f_0	Operation Frequency	-	0.8	-	2.5	GHz
IL	Insertion Loss CTQ	ANT-Port1/2	-	0.4	0.6	dB
ISO	Isolation	ANT-Port1/2@1.0GHz	25	30	-	dB
		Port1-Port2@1.0GHz	25	30	-	dB
		ANT-Port1/2@2.0GHz	25	45	-	dB
		Port1-Port2@2.0GHz	25	30	-	dB
$P_{in\ 0.5dB}$	Input Power for 0.1dB Compression	ANT-Port1/2@2.0GHz	35	38	-	dBm

The above mentioned figures are measured using muRata specific test board shown in section 6.

Copyright © 2009 LG Electronics. Inc. All right reserved.
Only for training and service purposes

LGE Internal Use Only

3.5.9 UMTS 2100 Directional Coupler(U103 LDC151G8620Q-359)

CHARACTERISTICS of Each Band for Reference (-40 °C ~ +85 °C)

Band	W-CDMA(Band1) Tx
Frequency Range (BW)	1920.00 ~ 1980.00 MHz
Coupling	20.50 ± 1.00 dB (Termination : 50 Ω)
Insertion Loss in BW	0.22 dB max. at 25 °C 0.25 dB max. at -40 °C ~ +85 °C
Isolation	34.0 dB min.
V.S.W.R. in BW	1.40 max.
Characteristics Impedance	50 Ω (Nominal)
Power Capacity	3.0 W max. (50 Ω Load)

3.5.10 UMTS 800 Directional Coupler(U101 LDC15836M20Q-360)

6. ELECTRICAL CHARACTERISTICS (-40 °C ~ +85 °C)

Frequency Range (BW)	836.50 ± 12.50 MHz
Coupling	19.80 ± 1.00 dB (Termination : 50 Ω)
Insertion Loss in BW CTQ	0.25 dB max. at 25 °C 0.28 dB max. at -40 °C ~ +85 °C
Isolation	33.0 dB min.
V.S.W.R. in BW	1.40 max.
Characteristics Impedance	50 Ω (Nominal)
Power Capacity	3.0 W max. (50 Ω Load)

Copyright © 2009 LG Electronics. Inc. All right reserved.
Only for training and service purposes

3.5.11 UMTS 2100 TX SAW Filter (FL100 SAFEB1G95KA0F00)

6.2 At 25±2°C

	Item	Specifications	Typical value at 25±2°C (Reference value)
6.2.1	Nominal Center Frequency (fc)	1950MHz	–
6.2.2	Insertion Loss (1920...1980MHz) CTQ	2.6dB max.	2.2dB
6.2.3	Absolute Attenuation		
	1) 0.3 ... 1570MHz	28dB min.	32dB
	2) 1570 ... 1880MHz	30dB min.	35dB
	3) 2110 ... 2170MHz	35dB min.	37dB
	4) 2300 ... 2500MHz	35dB min.	37dB
	5) 2500 ... 3120MHz	30dB min.	38dB
	6) 3840 ... 3960MHz	30dB min.	41dB
	7) 5760 ... 5940MHz	20dB min.	25dB
6.2.4	Ripple Deviation (1920...1980MHz)	1.7dB max.	0.8dB
6.2.5	VSWR (1920...1980MHz)	1.8 max.	1.4

Copyright © 2009 LG Electronics. Inc. All right reserved.
Only for training and service purposes

LGE Internal Use Only

3.5.12 UMTS 800 TX SAW Filter (FL103 SAFEB836MAL0F00)

6. ELECTRICAL CHARACTERISTICS

	Item	Specifications	Typical value at 25±2°C (Reference value)
6.1	Nominal Center Frequency (fc)	836.5MHz	–
6.2	Insertion Loss (824...849MHz) CTQ	2.5dB max.	2.1dB
6.3	Absolute Attenuation		
	1) 0.1 ... 800MHz	35dB min.	61dB
	2) 869 ... 894MHz	40dB min.	42dB
	3) 1574 ... 1577MHz	35dB min.	61dB
	4) 1638 ... 1708MHz	45dB min.	59dB
	5) 2462 ... 2557MHz	30dB min.	52dB
	6) 3286 ... 3406MHz	20dB min.	50dB
6.4	Ripple Deviation (824...849MHz)	1.8dB max.	0.6dB
6.5	VSWR (824...849MHz)	1.9 max.	1.5

Copyright © 2009 LG Electronics. Inc. All right reserved.
Only for training and service purposes

3.6 Digital Baseband(DBB/MSM7200A)

3.6.1 General Description

A L-06A supports UMTS-800, UMTS-2100, GSM-900, GSM -1800, GSM-1900. All receivers and the transmitter use the radioOne[1]Zero-IF architecture to eliminate intermediate frequencies, directly converting signals between RF and baseband.

A generic, high-level functional block diagram of L-06A is shown in Figure 3-1. One antenna collects base station forward link signals and radiates handset reverse link signals. The antenna connects with receive and transmit paths through a SPDT(Single Port Double Throw).

RTR6280 receive paths include four GSM/EDGE Rx signal paths that support
GSM 900, 1800, and 1900 bands, and four WCDMA Rx signal paths(two single-ended and two differential) for one UMTS low-band and three UMTS high-bands.

RTR6280 transmit includes four transmit signal paths with five outputs (three high bands and two low bands) supporting multi-band and multi-mode GSM/GPRS/EDGE polar transmit and WCDMA/HSDPA transmit architectures.

L-06A power is managed and regulated by the PM7540 Power Management IC. This versatile device integrates all wireless handset power management, general housekeeping, and user interface support functions into a single mixed signal IC. It monitors and controls the external power source and coordinates battery recharging while maintaining the handset supply voltages using low dropout, programmable regulators.

The device's general housekeeping functions include an ADC and analog multiplexer circuit for monitoring on-chip voltage sources, charging status, and current flow, as well as user-defined off-chip variables such as temperature and battery ID. Various oscillator, clock, and counter circuits support IC and higher-level handset functions. Key parameters such as under-voltage lockout and crystal oscillator signal presence are monitored to protect against detrimental conditions.

Copyright © 2009 LG Electronics. Inc. All right reserved.
Only for training and service purposes

LGE Internal Use Only

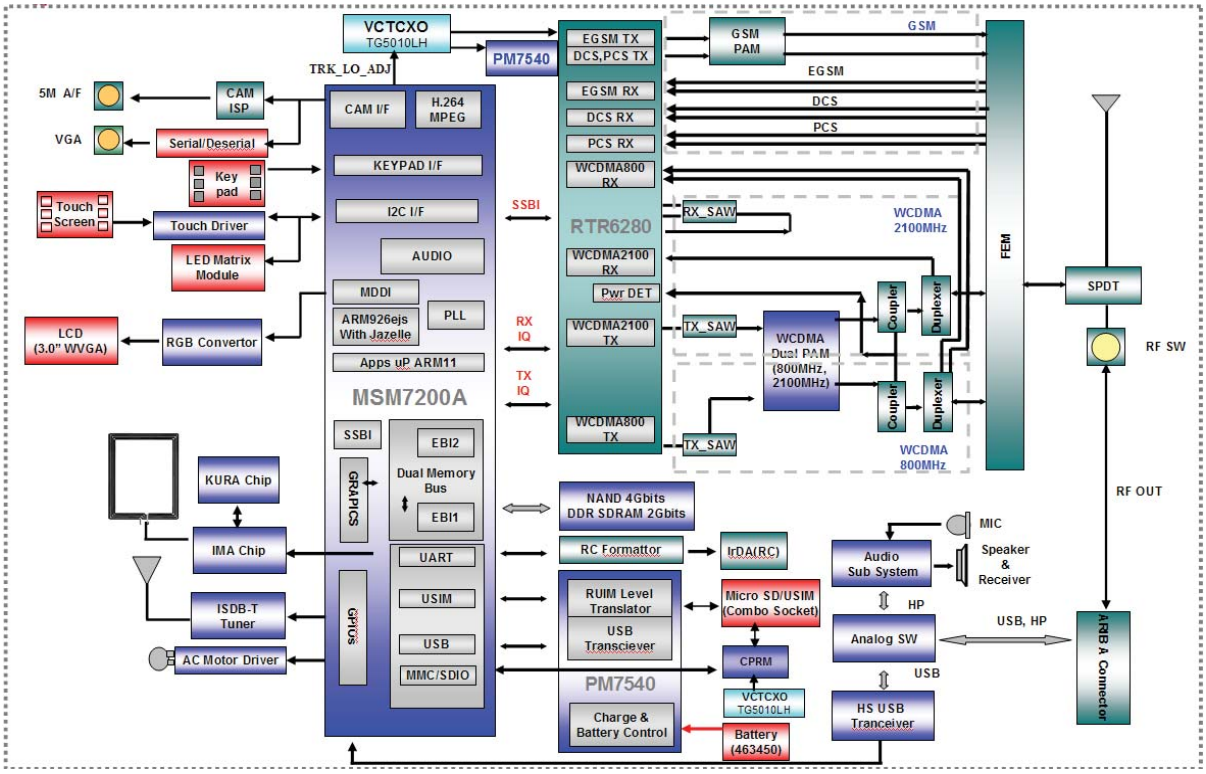

Figure. L-06A Simplified Block Diagram

A. Features(MSM7200A)

The MSM7200A system solution consists of the MSM7200A, RTR6285™, PM7540™ IC, and AMSS system software with the SURF7200A™ platform available for development.

☐ WCDMA/HSDPA/HSUPA
☐ GSM/GPRS/EGPRS
☐ High-performance ARM1136-J application processor running at up to 528 MHz
☐ High-performance ARM926EJ-S modem processor running at up to 256 MHz
☐ Internal stacked DDR memory, 256 Mbits
☐ Java hardware acceleration for faster Java-based games and other applets
☐ Support for Bluetooth® 2.0 EDR via external device (BTS4020)
☐ High-speed, serial mobile display digital interface that optimizes the interconnection cost between the MSM device and the LCD panel
☐ Receive diversity support for WCDMA providing improved capacity and data throughput
☐ USB OTG core supports both slave and limited host functionality
☐ High-speed USB link
☐ Integrated wideband stereo codec for digital audio applications
☐ Direct interface to digital camera module with video front-end (VFE) image processing
☐ GPS position location capabilities
☐ TV-out supports NTSC/PAL format
☐ Vocoder support (GSM-HR, FR, EFR, AMR)
☐ Advanced 15 mm x 15 mm x 1.4 mm, 0.5 mm pitch, 543-pin lead-free CSP packaging technology

Copyright © 2009 LG Electronics. Inc. All right reserved.
Only for training and service purposes

3.6.2. Block Diagram(MSM7200A)

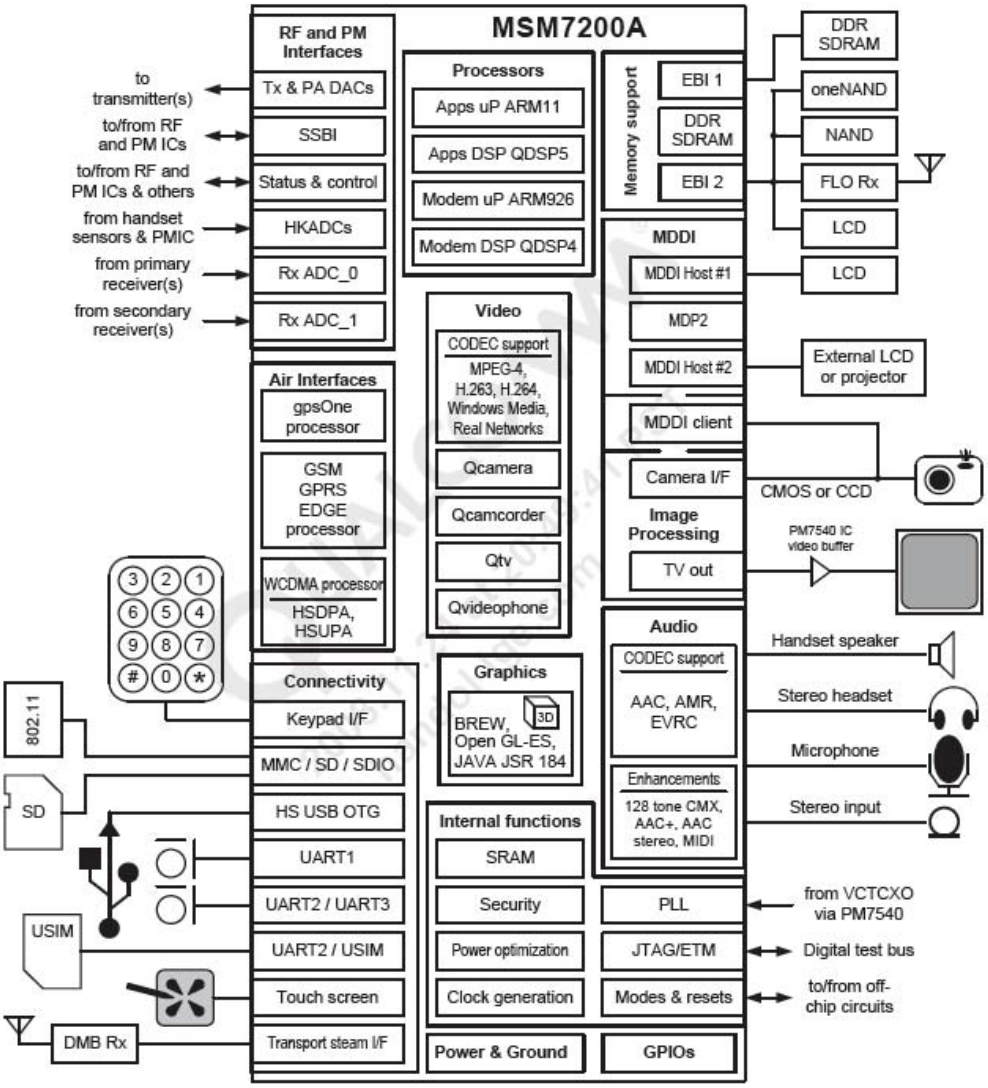

Figure 1-1 MSM7200A IC functional block diagram processors

Copyright © 2009 LG Electronics. Inc. All right reserved.
Only for training and service purposes

LGE Internal Use Only

3.7 Modem subsystem

The modem subsystem is defined as everything under direct or indirect control of the modem processor. It includes all blocks that provide modem functionality directly (such as WCDMA modulation and demodulation, searching, GPS, GSM modulation and demodulation, etc.) and all blocks that support primary modem functionality, such as the modem DSP, modem AHB bus, sleep controller, interrupt controller, etc.

The MSM7200A modem subsystem consists of the following components (Modem subsystem functional block diagram):

■ An ARM926EJ-S as the main modem processor

■ A modem-to-applications bridge that connects the modem subsystem to the application subsystem

■ A modem-to-peripheral bridge that connects the modem subsystem to the peripheral subsystem. In addition to this bridge, the modem subsystem contains some peripheral functions such as the interrupt controller, watchdog and other timers, SBI, and modem power management.

■ A modem DSP (mDSP) that controls the operation of the concurrent modem hardware blocks and assists with symbol level processing of the physical layer traffic.

■ A 64 kB secure BOOT ROM containing the primary boot loader for the ARM926EJ-S processor.

■ An internal RAM (IRAM) used by the modem processor for interprocessor communication with the applications processor. It also contains vectors to the modem processor exception handlers at the top eight word locations.

■ A security mode control (SMC) block containing, among other things, electrical fuses (Qfuses) that are used to disable specific functionality, such as ARM debug modes that are useful for testing but pose a security breach for normal operation.

- ❒ Only the modem ARM running trusted software is able to blow and restore a Qfuse.
- ❒ SMC is part of the modem subsystem's memory protection that physically prevents certain masters on the modem subsystem bus from accessing certain memory regions. This memory protection prevents modem DM access to either the internal RAM or to the SMC; it only allows the modem ARM in the supervisor mode to access them.
- ❒ The SMC block also contains other security features, such as a unique device ID to uniquely identify a chip.

■ An always-on modem power manager block in the always-on power domain to control power collapsing of the MSM7200A modem subsystem.

Copyright © 2009 LG Electronics. Inc. All right reserved.
Only for training and service purposes

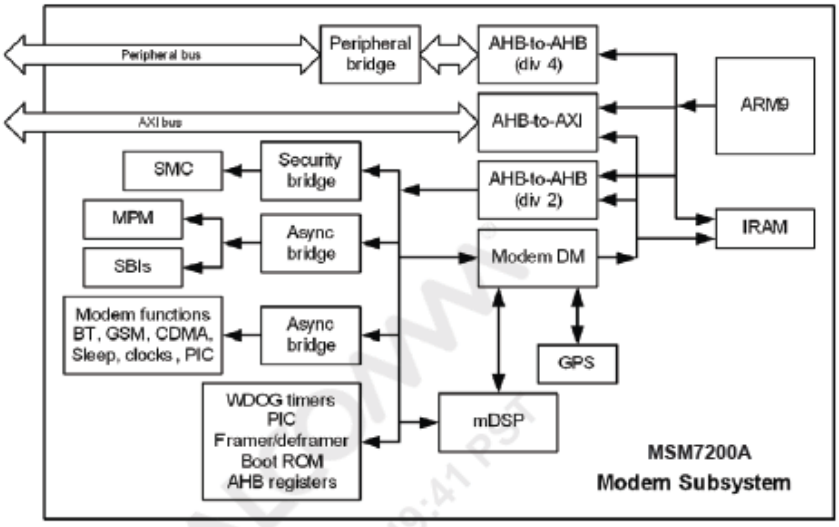

Figure 3-2 Modem subsystem functional block diagram

All modem functions require support from the mDSP to operate. The mDSP has a limited amount of processing power and program/data storage. The mDSP must meet the sum of all modem MIPS and memory requirements (plus some overhead) for concurrent operation.

The modem subsystem bus interfaces with several buses and their respective subsystems:

■ A high-speed system bus is connected to the applications subsystem bus through the modem-to-applications bridge. The modem processor and other masters can access the application subsystem, but masters on the application subsystem (such as the application processor) cannot access the modem subsystem for security reasons.

■ The local AHB bus is connected to the peripheral subsystem through the modem-to-peripheral bridge. The modem processor shares access to this subsystem with the applications processor. The peripheral block accesses standard interfaces (such as the USB, MMC, and UART) for external communications, and can access MSM-internal peripheral functions as well.

■ The local AHB bus is also used to connect to the MSM bridge, allowing connections to asynchronous MSM buses used for communicating with the modem hardware blocks.

■ The AHB bus is a slow-speed request/acknowledge-based bus that is used to configure various blocks of the modems.

■ The modem DM host interface is used to program the modem data mover through the modem processor. Because these data paths have moderately high data rates (up to 3.1 Mbit/sec plus overhead), they have a direct connection to the AHB instead of going through the asynchronous MSM bus.

Copyright © 2009 LG Electronics. Inc. All right reserved.
Only for training and service purposes

LGE Internal Use Only

3.7.1 Modem microprocessor – ARM926EJ-S

The ARM926EJ-S processor is a single-clock, high-performance, Java-enabled, synthesizable core. Its features include:

■ Harvard architecture, 16 kB instruction and 16 kB data caches; each 4-way associative supported on the modem subsystem

■ Harvard AHB interface

■ ARM and THUMB states are supported

■ Jazelle ARM9EJ-S core (Java support)

■ Embedded trace macrocell (ETM) support

■ DC power-saving techniques

■ Operation at a target frequency of 256 MHz

A few ARM926 functions and modes are described in more detail in the following section.

3.7.1.1 Reset and pause

The modem microprocessor includes reset generation functionality (Figure 3-3). The reset/pause block is responsible for:

■ Generating synchronous reset signals for the modem processor and the other bus architecture peripherals (the system).

■ Providing status information concerning the source of the last reset (pin or watchdog generated).

■ Controlling the clock to the ARM microprocessor, thereby providing reset or pause mechanisms for the modem processor.

■ Allowing software to control this pause mechanism to halt the microprocessor for a specified amount of time.

Copyright © 2009 LG Electronics. Inc. All right reserved.
Only for training and service purposes

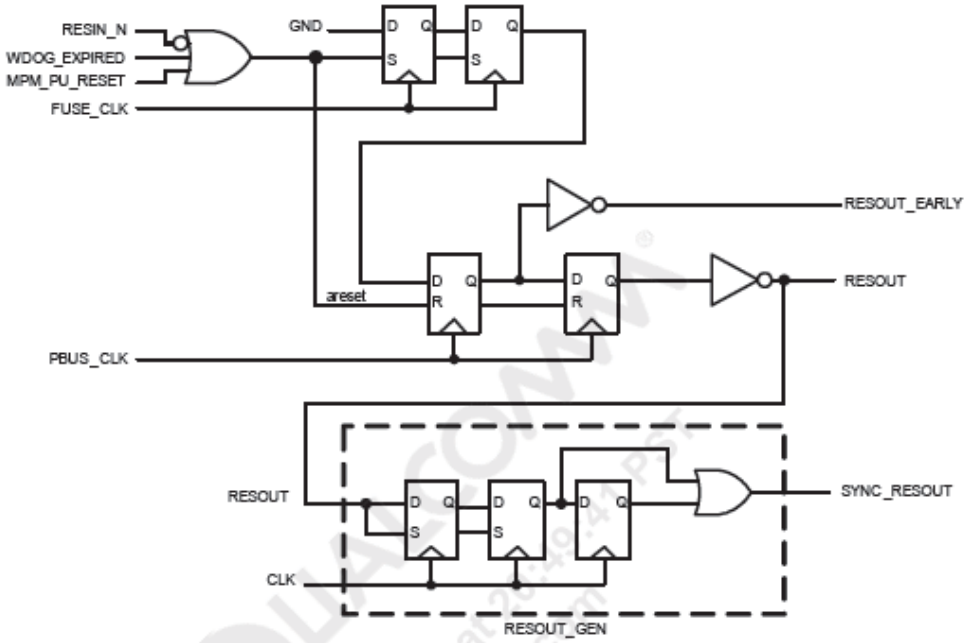

Figure 3-3 Reset generation

3.7.1.2 Watchdog timer

The watchdog timer is a 14-bit counter running off the sleep controller clock regime that enables the handset to recover from unexpected hardware or software anomalies. If the microprocessor fails to periodically reset the watchdog timer, the timer expires and the handset is reset.

The watchdog timer is disabled and/or reset by grounding the WDOG_EN pin; it can also be reset by asserting the RESIN_N pin. An example of hardware disabling the watchdog timer is when ARM processor enters debug mode (indicated by the DBGACK pin of the processor transitioning from low to high).

The watchdog timer is enabled by leaving the WDOG_EN pin unconnected (it has an internal pull-up) or by connecting it to VDD_P. If the timer was temporarily disabled, it can be re-enabled by applying a system reset that clears the state of the internal signal watchdog_disable. When enabled, the watchdog circuit pulses the WATCHDOG_EXPIRED signal whenever its timer has expired. In NATIVE mode this signal is combined with the RESIN_N pin to generate the RESOUT_N signals and the MSM device's internal reset.

3.7.1.3 Sleep mode and watchdog freeze

The modem processor cannot reset the watchdog timer while in its sleep mode. To accommodate this, the watchdog can be frozen before entering sleep mode. To enable the freeze, the microprocessor must write a 1-0 sequence to the WDOG_FREEZE register.

Copyright © 2009 LG Electronics. Inc. All right reserved.
Only for training and service purposes

LGE Internal Use Only

3.7.1.4 Non-sleep mode

In non-sleep mode, the processor must reset the watchdog timer at least once every 390 ms. If not, the watchdog timer expires and asserts an internal RESIN_N signal to the system. The WDOG_EXPIRED signal lasts between 53 and 106 ms (usually around 97.5ms). To reset the watchdog timer the microprocessor must write a 1-0-1 sequence to the WATCH_DOG bit of the SLEEP_CTL register.

3.7.2 Modem DSP – QDSP4

The MSM7200A DSP (mDSP) modem supports the following standards and related features.:

■ GSM/GPRS (support modes conform to release '99 specification of subfeature):

❒ Voice features:
– FR
– EFR
– AMR
– HR
– A5/1 and A5/2 ciphering

❒ Circuit switched data features:
– 9.6 k or 14.4 k
– Fax
– Transparent and non-transparent modes for CS data and fax
– No subrates are supported

❒ Packet switched data (GPRS):
– Class B operation
– Multislot class 10 data services
– CS schemes CS1, CS2, CS3, and CS4
– GEA1 and GEA2 ciphering

■ EDGE

❒ EDGE E2 power class for 8PSK
❒ DTM (Simple Class A), multi-slot Class 12
❒ Downlink coding schemes – CS 1-4, MCS1-9
❒ Uplink coding schemes – CS1-4, MCS 1-9
❒ BEP reporting
❒ SRB loopback and test mode B
❒ 8-bit and 11-bit RACH

Copyright © 2009 LG Electronics. Inc. All right reserved.
Only for training and service purposes

❒ PBCCH support
❒ 1 phase/2 phase access procedures
❒ Link adaptation and IR
❒ NACC, extended UL TBF

■ WCDMA R'99
All modes and data rates for WCDMA frequency division duplex (FDD), with the following restrictions (the downlink supports the following specifications):

❒ Up to four physical channels, including the broadcast channel (BCH), if present
❒ Up to three dedicated physical channels (DPCHs)
❒ Spreading factor (SF) range support from 4 to 256
❒ Support for the following transmit diversity modes:
– Space time transmit diversity (STTD)
– Time-switched transmit diversity (TSTD)
– Closed-loop feedback transmit diversity (CLTD)
❒ The uplink supports the following specifications (the uplink provides the following UE support):
– One physical channel, eight TrCH, and 16 TrBks starting at any frame boundary
– A maximum data rate of 384 kbps
– Full SF range support from 4 to 256
❒ SMS (CS and PS)
❒ PS data rate - 384 kbps DL/384 kbps UL
❒ CS data rate - 64 kbps DL/64 kbps UL
❒ AMR (all rates)

■ HSDPA
The MSM7200A device supports the release 5, December 2004 standard for HSDPA, including the following features:

❒ HS-DSCH (HS-SCCH, HS-PDSCH, and HS-DPCCH) and the R99 transport channels as defined in 3GPP specifications
❒ A maximum of four simultaneous HS-SCCH channels as defined in 3GPP specifications
❒ A maximum of 10 HS-PDSCH channels, both QPSK and 16 QAM modulation and UE Category 6 in software release 2.0, and Category 8 in software release 3.0
❒ CQI and ACK/NACK on HS-DPCCH channel as defined in 3GPP specifications
❒ All incremental redundancy versions for HARQ as defined in 3GPP specifications
❒ Can switch between HS-PDSCH and DPCH channel resources as directed by the network

Copyright © 2009 LG Electronics. Inc. All right reserved.
Only for training and service purposes

LGE Internal Use Only

❒ Can be configured to support any of the two power classes 3 or 4 as defined in 3GPP R5 specifications (25.101)
❒ Network activation of compressed mode by SF/2 or HLS on the DPCH for conducting inter-frequency or inter-RAT measurements when the HS-DSCH is active
❒ STTD on both associated DPCH and HS-DSCH simultaneously
❒ CLTD Mode 1 on the DPCH when the HS-PDSCH is active
❒ STTD on HS-SCCH when either STTD or CLTD Mode 1 are configured on the associated DPCH
❒ TFC selection limitation on the UL factoring in transmissions on the HS-DPCCH as required in TS 25.133
❒ HSDPA enables PS data speeds up to 7.2 Mbps on the downlink

■ HSUPA

The MSM7200A device supports the release 6, March 2006 standard for HSUPA, including the following features:

❒ N E-AGCH, E-RGCH and E-HICH channels for downlink as defined in the 3GPP specifications. E-RGCH and E-HICH supports serving and non-serving radio links with up to four radio links in the E-DCH active set.
❒ STTD on all HSUPA downlink channels
❒ CLTD Mode 1 on HS-PDSCH and DPCH along with HSUPA channels
❒ All incremental redundancy versions for HARQ and maximum number of HARQ retransmissions as defined in 3GPP specifications
❒ E-DCH channel on the uplink as defined in the 3GPP specifications with support for up to four E-DPDCH channels
❒ E-DCH data rates of up to 5.76 Mbps for 2 ms TTI (UE Category 6)
❒ HSUPA channels simultaneously with R99 and HSDPA channels as defined in the 3GPP specifications
❒ Switch between HSUPA channels and DPCH channel resources as directed by the network
❒ Handover using compressed mode with simultaneous E-DCH and HS-DSCH interactive/background and streaming QoS classes

Copyright © 2009 LG Electronics. Inc. All right reserved.
Only for training and service purposes

Features	MSM7200A
Standards	WCDMA, HSDPA, HSUPA GSM/GPRS/EDGE
Processor	Apps Micro: ARM11- 528 MHz Apps DSP: QDSP5 - 256 MHz Modem Micro: ARM926 - 256 MHz Modem DSP: QDSP4 - 122 MHz
Memory support	Stacked: 256 Mbit x 32 DDR SDRAM
	External: 32 or 16-bit DDR SDRAM; 8- or 16-bit NAND flash; 16-bit oneNAND flash;
Qcamera (camera interface)	Up to 8 megapixel CCD or CMOS with int.Video FE HW
Qcamcorder	VGA (640 x 480), 30 fps
Qtv (video decode)	VGA, 30 fps streaming or off-line
Qvideophone	QVGA up scaling (320 x 240), 15 fps realtime en- + decode
3D HW graphics acceleration	4 M z-buffered triangles/sec, 133 M textured pixels/sec
	Hardware accelerated triangle and pixel pipeline. OpenGL® ES 1.0-compliant with additional advanced features: multitexture, texture compression, integrated 2D/3D pipeline, bump mapping, point sprites.
TV out	Support for NTSC/PAL TV output for viewing video, photographs and playing 3D games.
Audio support	AAC+, AMR, FR, EFR, HR, G.729a, G.711 enhancements: 96 voice CMX, AAC stereo encode.
Peripheral support	4-bit SD (52 MHz), 4x SDIO (two can be combined for 8-bit SDIO), MIR IrDA, USIM, HS USB (480 Mbps), UARTs (two at 4 Mbps).
Connectivity	Bluetooth 2.0 external solution
Integrated GPS	MS-assist and MS-based A-GPS and standalone modes.
High-speed serial interface	Mobile display digital interface (MDDI), two hosts, one client

Table 1-2 MSM7200A feature summary

QUALCOMM 2008.11.24 handset 20:19:44 PST

Copyright © 2009 LG Electronics. Inc. All right reserved.
Only for training and service purposes

LGE Internal Use Only

The MSM7200A device includes four integrated processors:

■ ARM1136-J™ for application functions (with the ARM® Jazelle™ Java® hardware accelerator)
■ ARM926EJ-S™ for modem functions (with the ARM Jazelle Java hardware accelerator)
■ The low-power, high-performance QDSP5000™ application digital signal processor (aDSP)
■ The QDSP4000™ modem digital signal processor (mDSP)

Hardware acceleration eliminates the need for the multimedia companion processors normally required for video and audio-based applications that support MP3 music files, a MIDI synthesizer, video and still image record and playback, and 2D/3D graphics functions. By removing the need for costly applications, coprocessors and memory subsystems, the MSM7200A solution reduces BOM costs and increases standby and talk times.

Memory support

In addition to the internal stacked 256 Mb DDR memory, the MSM7200A IC supports the following memory features:

■ 128 MHz bus clock for DDR SDRAM
■ Dual-memory buses separating the high-speed memory subsystem (EBI1) from low-speed peripherals (EBI2) such as LCD panels
■ 1.8 V or 2.6 V memory interface support (excluding EBI1)
■ NAND flash memory interface
■ One-NAND flash memory interface
■ Boot from NAND

Air interfaces

The MSM7200A IC performs the signal processing necessary to support several air interfaces:

■ WCDMA: HSDPA, HSUPA, R99
■ GSM/GPRS/EDGE
■ GPS position location: simultaneous-GPS and time-multiplexed GPS architectures
■ Bluetooth™ 2.0 EDR (BTS4020™) device

Copyright © 2009 LG Electronics. Inc. All right reserved.
Only for training and service purposes

RF and PM interfaces

The MSM7200A system solution consists of the MSM7200A baseband processor, complete with protocol stacks for the interfaces listed above and multimedia system software. The MSM7200A device interfaces with a variety of radio frequency (RF) system solutions. The baseband and RF chipsets are supported by the QUALCOMM powerOne™ series PM7540™ power management device. Rx and Tx data, status, and control signals for all these RF and PM functions are communicated to/from the MSM7200A IC through the RF and PM interfaces.

All MSM7200A-compatible RFICs use the QUALCOMM radioOne® technology — a revolutionary technology for UMTS transceivers that uses a zero intermediate frequency (ZIF), or direct conversion, architecture for airlink reception and transmission. This direct conversion eliminates the need for large IF surface acoustic wave (SAW) filters and additional IF circuitry, significantly reducing BOM parts count and facilitating multiband and multimode handsets that can be produced in smaller form factors. The radioOne technology also integrates the LO sources and distribution circuits on-chip, providing the capabilities needed to operate on networks around the world while simplifying parts procurement.

MDDI (including MDP)

The high-speed, serial mobile display digital interface (MDDI) minimizes the interconnection costs between the MSM device and the LCD panel. Two host cores and one client core support internal LCDs, an external LCD, and digital camera functions. The mobile display processor (MDP) is a hardware accelerator that implements display adjustments quickly and efficiently. The MDP is used in conjunction with all display
interfaces, not just the MDDI.

Image processing

Expanded image processing capabilities include a direct interface for digital camera modules with video front-end (VFE) image processing. The high-quality digital camera processing supports CCD or CMOS image sensors up to eight megapixels. The TV Out feature supports NTSC/PAL formats.

Video

Video processing provides video telephony at 15 frames per second (fps) with QCIF resolution, video encoding of 30 fps at VGA for camcorder capability, and video decoding of 30 fps at VGA resolution when streaming or offline. Codec support includes MPEG-4, H.263, H.264, Windows Media®, and RealNetworks®. Integrated QUALCOMM video processing technology includes Qcamera™, Qcamcorder™, Qtv™, and Qvideophone™.
Refer to QUALCOMM document MSM7200A Modem Station Modem Device Specification (80-VE263-1) for more details.

Copyright © 2009 LG Electronics. Inc. All right reserved.
Only for training and service purposes

LGE Internal Use Only

Graphics

■ 2D and 3D rendering
■ 3.5 M 3D-lighted triangles/sec (lighted, z-buffered, and textured)
■ Resolution support: up to VGA
■ Frame rate:
❒ Interpolated VGA and true HVGA: 30 fps
■ 3D pixel fill rate: 133 MP/sec (each pixel is 16-bit, z-buffered with shading, and one texture)

Audio

The MSM7200A device includes an integrated wideband stereo codec for digital audio applications. Additional audio features include:

■ Vocoder support (EVRC, AMR for MMS, AAC, and G.723.1)
■ Voice recognition (PureVoice VR™), including speaker-independent digit dialing
■ Acoustic echo cancellation
■ PureVoice Audio AGC™
■ Internal vocoder supporting 13 kbps Pure Voice®
■ Standard MIDI with 16 voices
■ 72-tone CMX® (text, picture, and MIDI streaming)

Connectivity

In addition to keypad and touch screen support, the MSM7200A IC supports a variety of consumer electronics with a wide range of connectivity options, including:

■ High-speed on-the-go universal serial bus (HS USB OTG)
■ Three universal asynchronous receiver transmitter (UART) serial ports
■ Two data mover (DM) high speed UARTs (4 Mbps)
■ USIM controller (via second or third UART)
■ USB-UICC
■ Four integrated 4-bit secure digital (SD) controller for SD/mini SD cards and SDIO (two can be combined to form one 8-bit SDIO interface)
■ Transport stream interface (TSIF) for reception of digital mobile broadcast signals

Internal functions

MSM7200A functions that do not easily fall into any of the other categories, that do not support the other functions directly, and that enable basic IC operations, are assigned to the internal functions category. This includes SRAM, PLL and clock generation, JTAG/ETM, modes and resets, power optimization, and security functions.
The QUALCOMM SecureMSM™ security solution is supported, thereby providing:

■ Secure boot: protects against re-flashing attacks
■ Secure component framework
■ Secure storage
■ Unchangeable hardware ID unique to each MSM device
The result is a very robust platform securing OMA DRM v2.0 services, CPRM, and e-commerce transactions.

Copyright © 2009 LG Electronics. Inc. All right reserved.
Only for training and service purposes

GPIOs

The MSM7200A IC includes 121 general-purpose I/O pins. Almost all of these versatile I/Os are configured by AMSS software for intended functions with the option to be easily configured for alternate functions. In addition, these GPIOs can be reconfigured to support any digital I/O function needed by a particular handset design.

Power and ground

DC power is provided by the PM7540 IC. The multiple supply voltages provide isolation between on-chip functions and are turned on and off in the proper sequence, with the proper timing, to ensure reliable initialization and shutdown. Many ground pins provide ample electrical connection to the PCB ground and thermal continuity.

Software features

In addition to all this functionality, the MSM7200A IC runs software that extends handset capability to include:

- AMSS
- The Launchpad™ Suite of applications technologies
- Support for the QUALCOMM BREW® solution
- Support for MediaFLO™ multicast communications

AMSS

QCT provides a complete software suite, the AMSS, for building handsets based on the MSM7200A chipset. AMSS software is designed to run on a Subscriber Unit Reference™ (SURF™) phone platform, an optional development platform optimized to assist in evaluating, testing, and debugging AMSS software.

Launchpad

The Launchpad Suite of applications technologies offers wireless operators and manufacturers a cost-effective, scalable, and timely solution for providing advanced wireless data services. This seamlessly integrated solution enables advanced next-generation applications and services that incorporate multimedia, position location, connectivity, customized user interface, and storage capabilities. Launchpad features are available for each QUALCOMM chipset, closely matching the specific functionality and cost-target objectives agreed upon in joint product planning with manufacturers and wireless service operators worldwide.

The MSM7200A solution supports the advanced feature set of the Launchpad Suite of technologies, including streaming video and audio, still image and video encoding and decoding, 2D/3D graphics acceleration, Java acceleration, and a megapixel camera interface. The MSM7200A solution also integrates gpsOne® functionality, featuring enhancements by SnapTrack®, Inc., to support assisted and standalone GPS — enabling a wide variety of location-based services and applications, including points of interest, personal navigation, and friend finder.

Copyright © 2009 LG Electronics. Inc. All right reserved.
Only for training and service purposes

LGE Internal Use Only

Integrated into the MSM7200A solution are Bluetooth® wireless connectivity and USB on-the-go (OTG) host controller functionality, allowing seamless communication directly with printers, digital cameras, keyboards, and other accessories.

BREW

The MSM7200A IC includes support for the QUALCOMM BREW solution. BREW is a complete product and business system for the development and over-the-air deployment of data services on wireless devices. The BREW solution provides the necessary tools and value-added services to developers, device manufacturers, and wireless operators for application development and distribution, device configuration, and billing/payment.

MediaFLO

MediaFLO is an end-to-end product and service offering that enables secure and efficient delivery of high-quality network-scheduled multimedia content to a large number of subscribers for easy viewing on handsets. The FLO™ technology incorporated within the MSM7200A IC and the companion baseband and RF ICs allows reception and presentation of high throughput multicast video and audio data.

Copyright © 2009 LG Electronics. Inc. All right reserved.
Only for training and service purposes

3.8. Power Block

3.8.1. General

MSM7200A, included RF, is fully covered by PM7540(Qualcomm PMIC). PM7540 cover
The power of MSM7200A, MSM memory, RF block, Bluetooth, Micro SD, USIM and TCXO.
Major power components are :
PM7540 (U400, Main PCB) : Phone Power Supply
BD6083GUL (U101, Folder FPCB) : LCD Backlight charge pump & RGB convertor power supply

3.8.2 PM7540

The PM7540 device (Figure 1-1) integrates all wireless handset power management, general housekeeping, and user interface support functions into a single mixed signal IC.
Its versatile design is suitable for CDMA and non-CDMA handsets, and other wireless products such as PC PDAs.

The power management portion accepts power from common sources - battery, external charger, adapter, USB_VBUS, coin cell backup - and generates all the regulated voltages needed to power the appropriate handset electronics. It monitors and controls the power sources, detecting which sources are applied, verifying that they are within acceptable operational limits, and coordinates battery and coin cell recharging while maintaining the handset electronics supply voltages.

On-chip voltage regulators generate 24 programmable output voltages using a combination of switched-mode power supplies and low dropout voltage regulators, all derived from a common trimmed voltage reference. One regulator is dedicated for generating microphone bias voltages.

The device's general housekeeping functions include a 16-position analog multiplexer that has five internal connections, six hardwired external connections, and supports an additional 22 external connections. The internal connections are used to monitor on-chip functions such as the temperature sensor. The hardwired external connections access input power nodes such as VCHG, VBAT, etc. The 22 additional external connections are made using the IC's multipurpose pins configured as analog inputs that are routed through switch circuits to create five multiplexer inputs; these are available to monitor system parameters such as temperature and battery ID.

Copyright © 2009 LG Electronics. Inc. All right reserved.
Only for training and service purposes

LGE Internal Use Only

The multiplexer output signal's offset and gain is adjusted, then buffered and routed to the Mobile Station Modem™ (MSM™) device for analog-to-digital conversion. Various oscillator, clock, and counter circuits are provided to initialize and maintain valid pulse waveforms and measure time intervals for higher-level handset functions. A dedicated controller manages the TCXO warmup and signal buffering, and key parameters are monitored to protect against detrimental conditions.

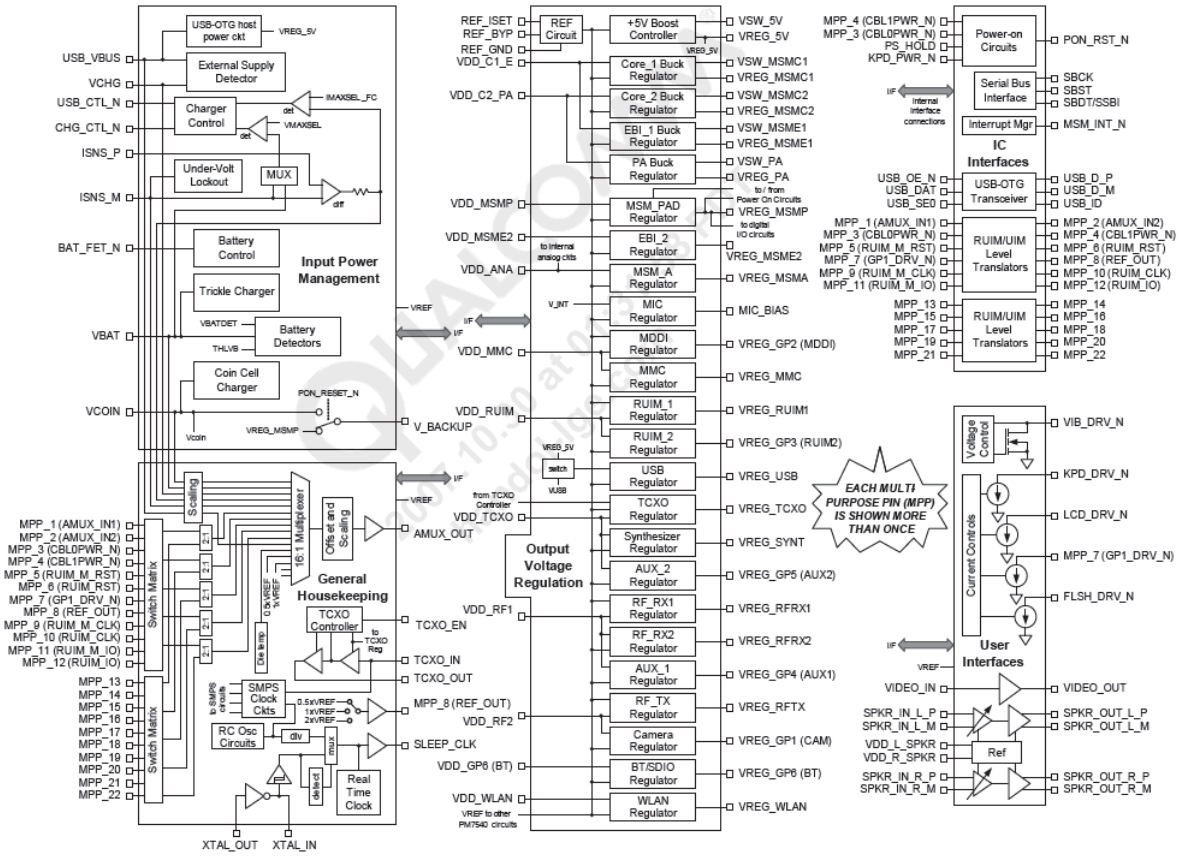

Figure 1-1 PM7540 functional block diagram

Copyright © 2009 LG Electronics. Inc. All right reserved.
Only for training and service purposes

Handset-level user interfaces are also supported. The IC includes four backlight or LED drivers with brightness (current) control that could be used for keypad, LCD, camera flash, and general-purpose drivers. A vibration motor driver alerts handset users of incoming calls, and a two-channel speaker driver with volume control can be used for audio alerts or speakerphone and melody-ringer applications. The speaker circuits accept stereo differential, stereo single-ended, and mono-differential inputs, and can be configured for stereo or mono outputs. A video amplifier is included that allows the handset to be used as a camcorder or for slide presentations.

IC-level interfaces include the configurable serial bus interface (SBI) used by the MSM device to control and status the PM7540 IC. This bus is supplemented by an interrupt manager for time-critical information. Another dedicated IC interface circuit monitors multiple trigger events and controls the poweron/poweron sequences. A universal serial bus/on-the-go (USB-OTG) transceiver is included for interfacing the MSM device to computers as a USB peripheral, or connecting the MSM device to other peripherals.
removable user identity module (RUIM) level translators enable MSM device interfacing with external modules.

The PM7540 IC is a mixed signal BiCMOS device and is available in the 137-pin chip scale package (137-CSP) that includes several center ground pins for electrical ground and thermal relief.
Since the PM7540 IC includes so many diverse functions, its operation is more easily understood by considering major functional blocks individually. Therefore, the PM7540 document set is organized by the following device functionality:

- Input power management
- Output voltage regulation
- General housekeeping
- User interfaces
- IC interfaces
- Multipurpose pins (which can be configured to function within some of the other categories)

Copyright © 2009 LG Electronics. Inc. All right reserved.
Only for training and service purposes

LGE Internal Use Only

3.8.3. Charging control

Voltage regulation (VDD or VBAT)

The PM7540 IC provides closed-loop control of the active pass transistor (via CHG_CTL_N or USB_CTL_N) to regulate either the handset supply voltage (VDD) when not charging or the main battery final voltage (VBAT) when charging. When fast charging is disabled, the battery MOSFET is opened and the voltage regulation point is the ISNS_M pin (VDD). When fast charging is enabled, the VBAT pin is the voltage regulation point, thereby improving the voltage precision of the fully charged battery (Li-ion battery manufacturers specify 1% accuracy).

➢ **VDD Regulation Loop**

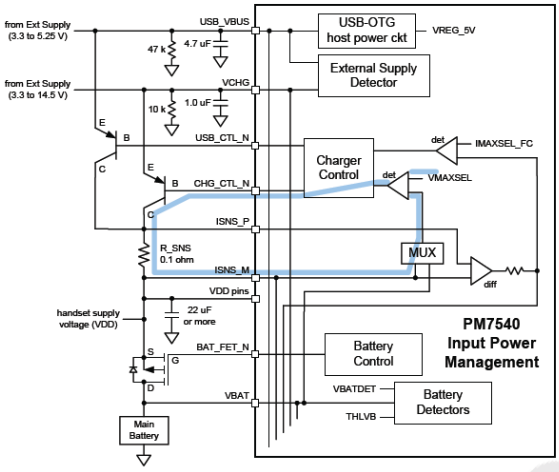

- VDD is regulated during normal operation (when the main battery is not being charged)
- Internal multiplexer selects the VDD voltage at ISNS_M for comparison to the programmed threshold VMAX_SEL
- The error voltage drives the charger control circuit which controls the pass transistor to achieve desired VDD
- Either pass transistor (charger or USB) could be active, but only one is active at a time

➢ **VBAT Regulation Loop**

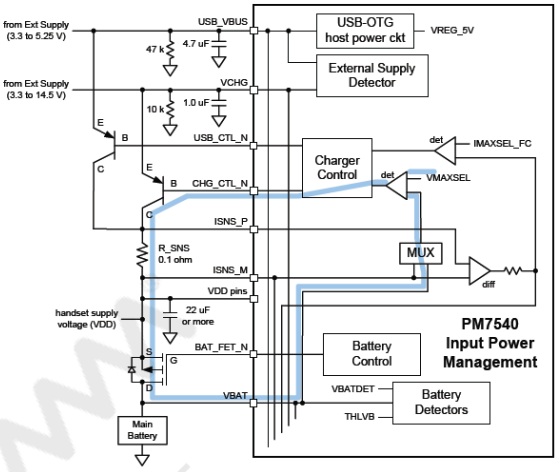

- VBAT is regulated during charging as the main battery approaches its final charge
- This improves the charged battery's final voltage by eliminating the battery transistor's voltage drop
- Internal multiplexer selects the VBAT voltage for comparison to the programmed threshold VMAX_SEL
- Other voltage regulation comments apply to VBAT as well

Copyright © 2009 LG Electronics. Inc. All right reserved.
Only for training and service purposes

Current regulation, monitoring, and protection

If a sense resistor is installed across ISNS_P and ISNS_M (pins C1 and C2, respectively) the PM7540 IC constantly monitors the total handset electronics plus charging current. If the programmed current threshold is exceeded, the active pass transistor is forced to a higher resistance, disrupting VDD or VBAT regulation but protecting against excess current. The VCHG current monitor defaults to its 1 Amp current setting upon powerup, thereby minimizing the risk of a large in-rush load collapsing VDD. Similarly, the VUSB current monitor defaults to its 0.5 A current setting upon powerup.

➢ **Current Regulation Loop**

- Current regulation (and pass transistor power limiting and over-current protection) requires the external sense resistor
- Over-current protection:
  1) Differential V across sense R is monitored
  2) Compared to programmed threshold IMAXSEL
  3) If threshold exceeded pass transistor R is increased
  4) Disrupts voltage regulation but limits current
- Same circuits regulate current during fast charging
  – Detected current is compared to IMAXSEL
  – Error voltage drives charger controller which sets pass transistor to achieve desired current
- "Detected" current is inversely proportional to sense R; scale IMAXSEL as needed if value other than 0.1 Ohm is used
- Either pass transistor (charger or USB) could be active, but only one is active at a time

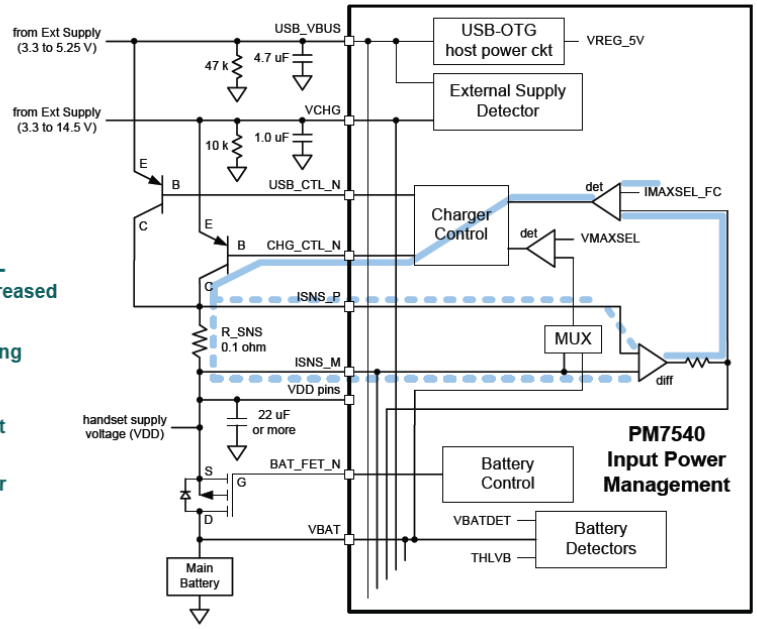

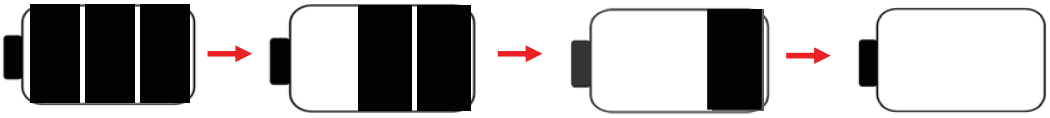

[Call]3.62V ± 0.05V
[Idle]3.72V ± 0.05V

[Call]3.52V ± 0.05V
[Idle]3.62V ± 0.05V

[Call & Idle]3.30 ± 0.05V

L-04A Battery Bar Display

Copyright © 2009 LG Electronics. Inc. All right reserved.
Only for training and service purposes

LGE Internal Use Only

Main Battery Charging

The PM7540 IC provides support circuitry for charging lithium-ion batteries, cycling through as many as four charging techniques: trickle, constant current, constant voltage, and pulsed. Battery voltage, external supply voltage, and total detected current measurements are available to the MSM device through the PM7540 analog multiplexer.
This allows the MSM device to monitor charging parameters, make decisions, and control the charging process.

Charging of a severely depleted battery begins with trickle charging, which limits the current and avoids pulling VDD down.

After a minimum battery voltage is established using trickle charging, constant current charging is enabled via software to charge the battery quickly—this mode is sometimes called fast charging.

After the battery approaches its target voltage (through constant current charging) the charge is completed using either constant voltage or pulse charging.

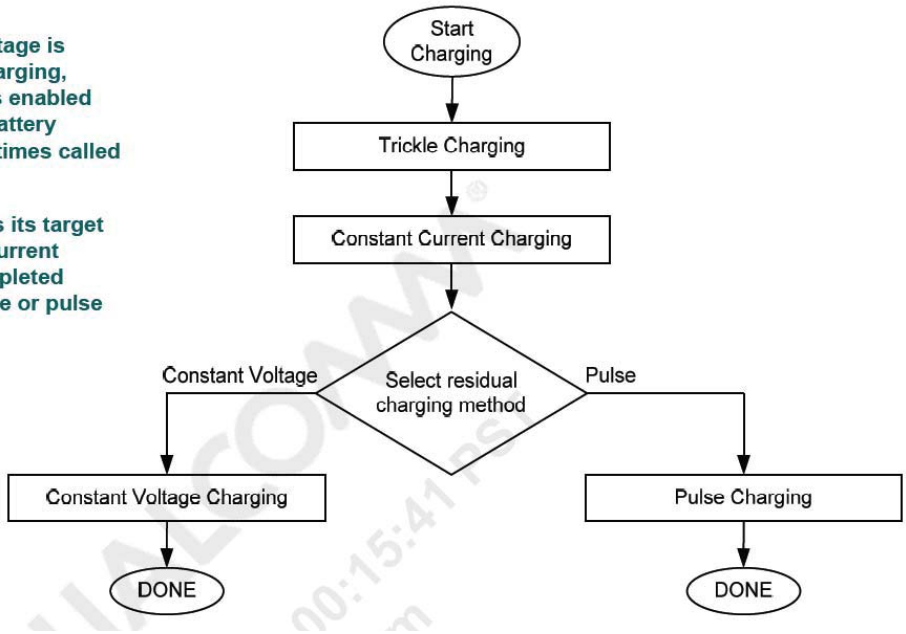

Copyright © 2009 LG Electronics. Inc. All right reserved.
Only for training and service purposes

Trickle Charging

Trickle charging of the main battery, enabled through MSM control and powered from VDD, is provided by the PM7540 IC. This mode is used to raise a severely depleted battery's voltage to a level sufficient to begin fast charging.

Parameter	Min	Typ	Max	Unit
Trickle Current	60	80	100	mA

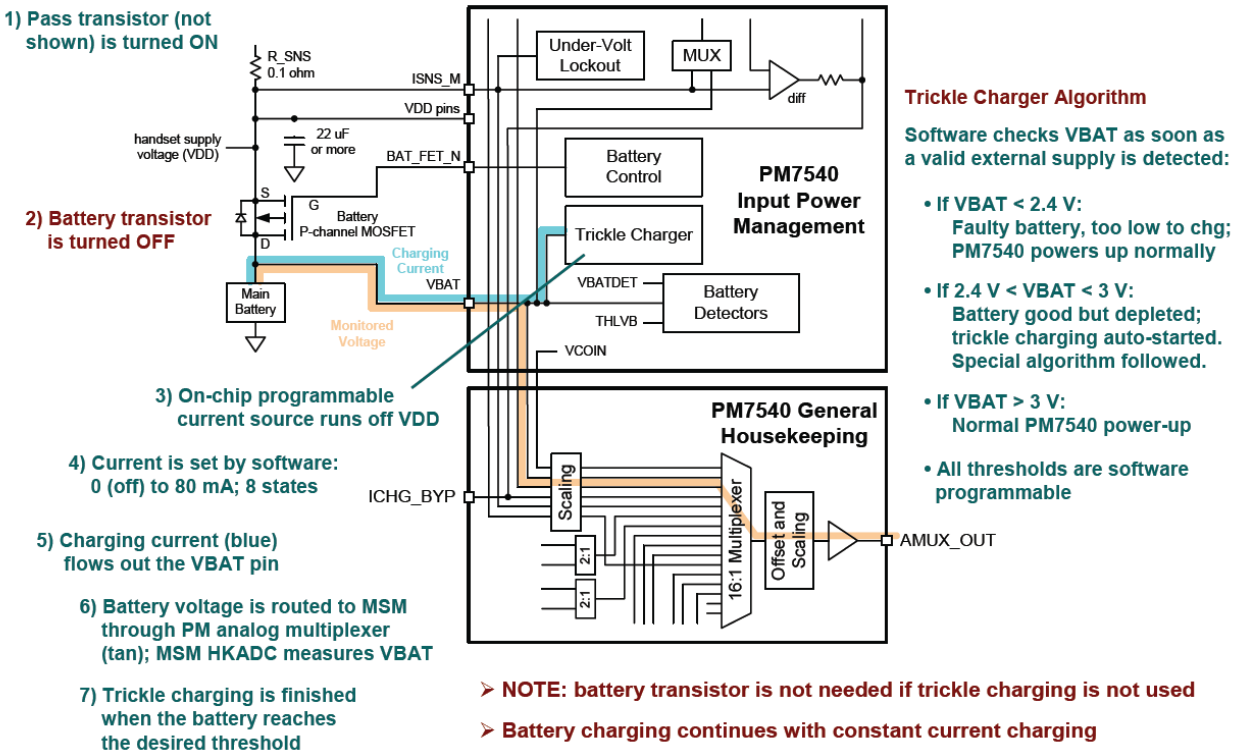

Copyright © 2009 LG Electronics. Inc. All right reserved.
Only for training and service purposes

LGE Internal Use Only

Constant Current Charging

The PM7540 IC supports constant current charging of the main battery by closing the battery MOSFET (connecting the battery to VDD), and closed-loop controlling the active pass transistor (charger or USB). The closed-loop control regulates the total current (handset electronics plus charging current) to match the programmed value (IMAXSEL).
The MSM device monitors the charging process as described earlier and continues the constant current mode until the battery reaches its target voltage. Lithium-ion batteries require further charging using constant voltage or pulsed techniques.

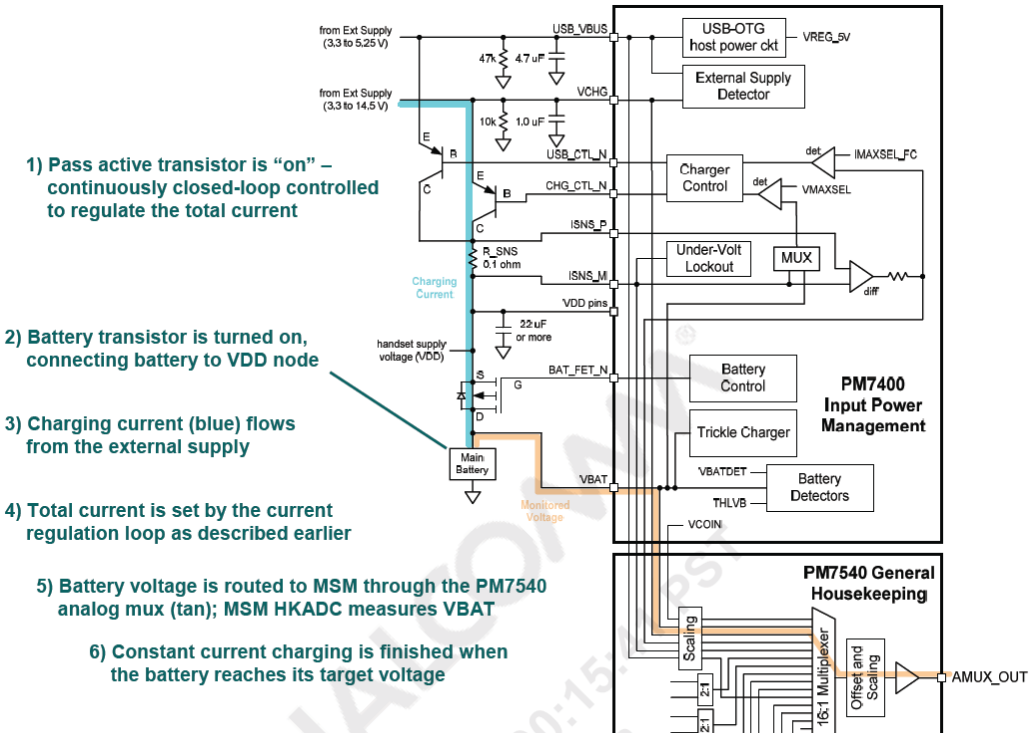

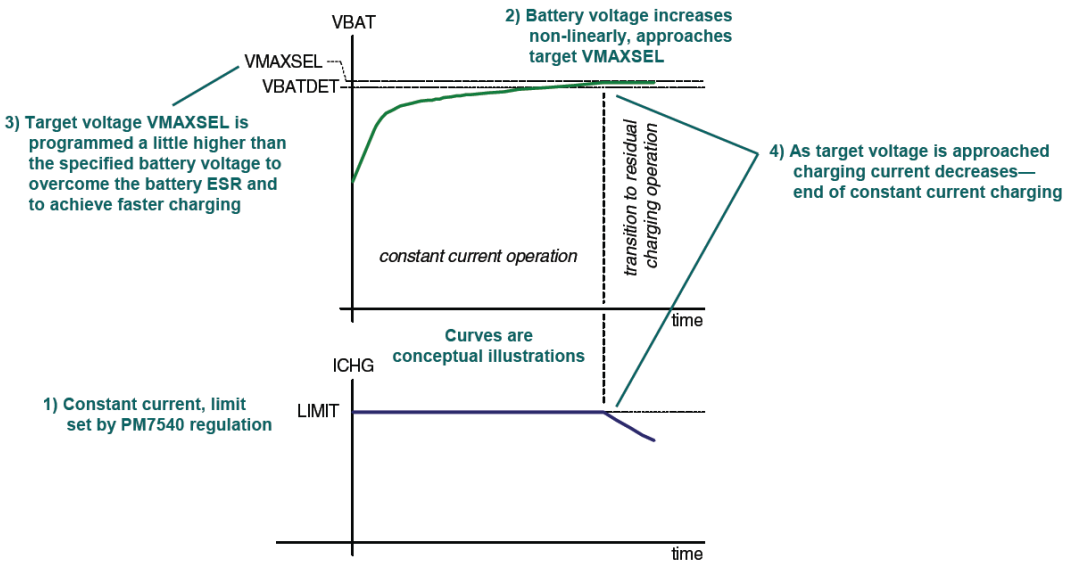

Copyright © 2009 LG Electronics. Inc. All right reserved.
Only for training and service purposes

Constant Voltage Charging

Once constant current charging of a lithium-ion battery is finished, the charging continues using either constant voltage or pulse techniques.
The MSM device and its software determines if and when it is appropriate to begin the constant voltage mode within the charging process. Usually the decision to stop the constant current mode is based upon the battery voltage reaching a programmed threshold slightly above the intended final voltage.

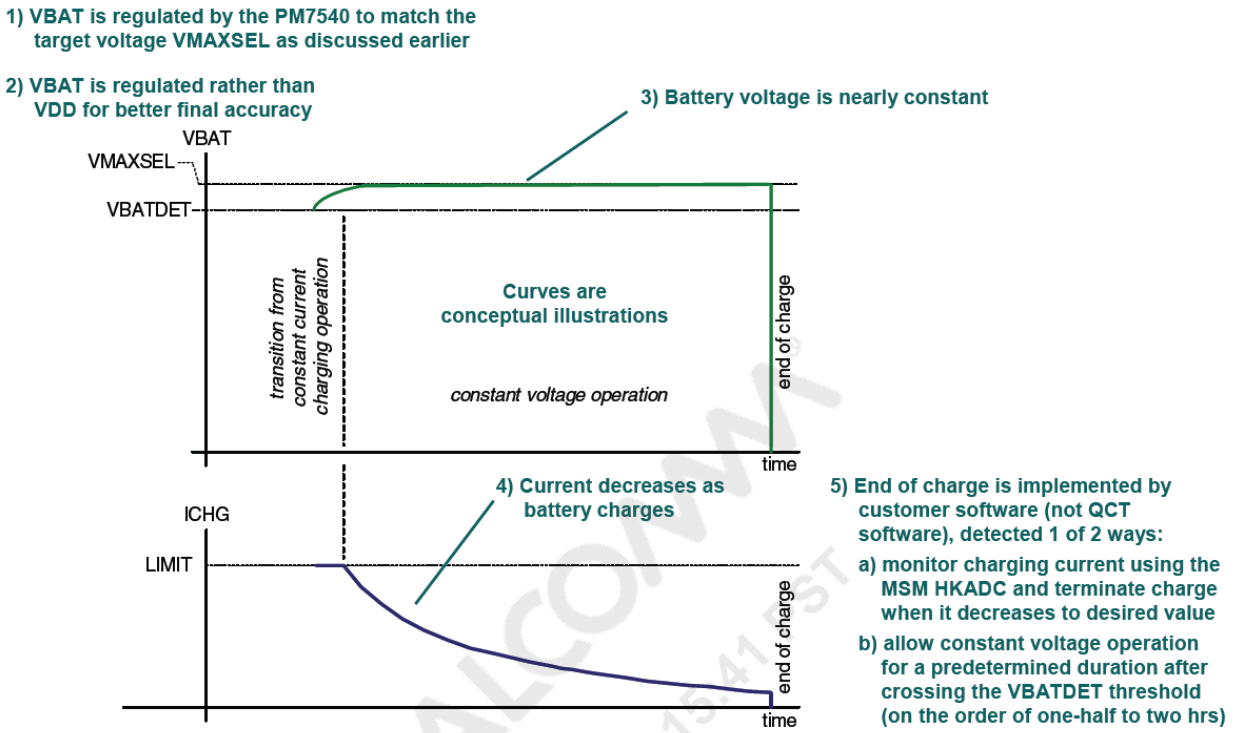

➢ **Do not allow charging to continue indefinitely – charging too long will damage the battery**

Copyright © 2009 LG Electronics. Inc. All right reserved.
Only for training and service purposes

LGE Internal Use Only

Pulse charging

Once constant current charging of a lithium-ion battery is finished, the charging continues using either constant voltage or pulse techniques.

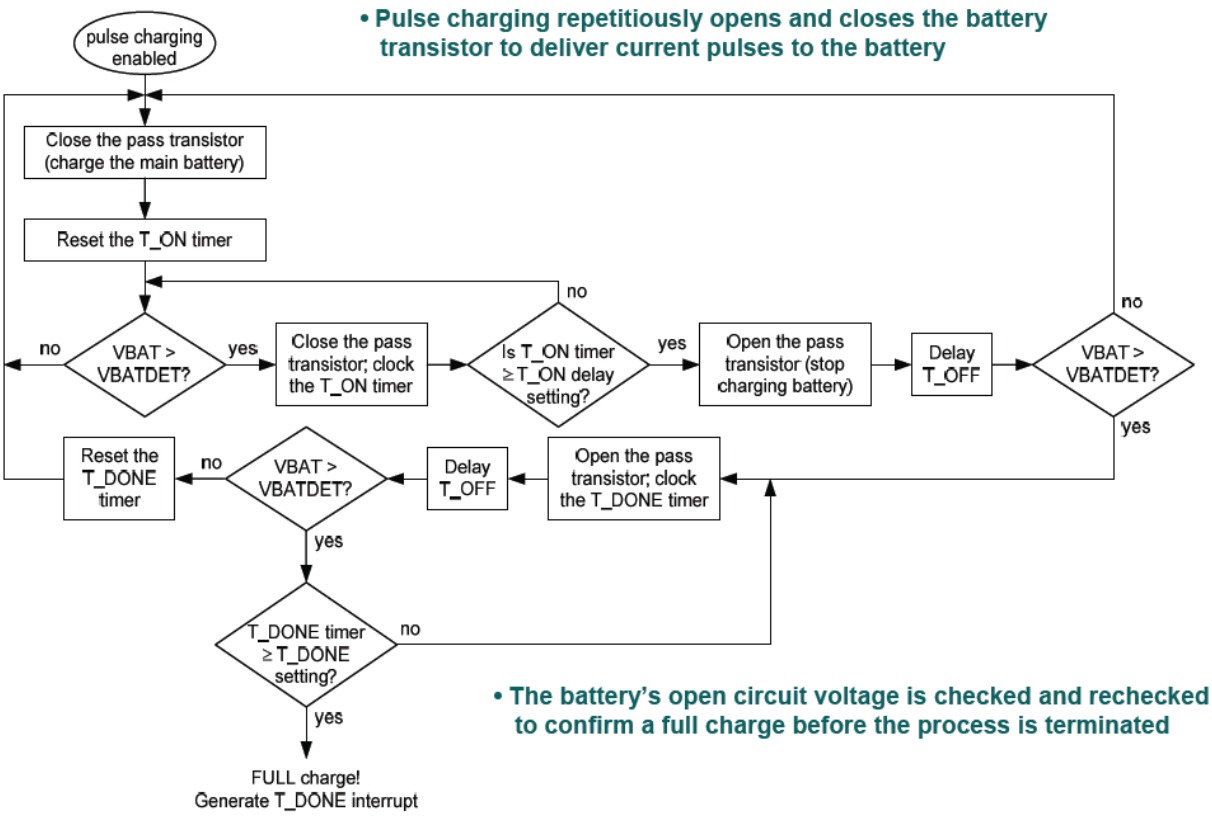

➢ **Benefits of pulsed charging (vs constant voltage): faster, more accurate, and dissipates less power in the pass transistor when switching from constant current charging**

Charging Feature

- Charging Method : CC & CV
  (Constant Current & Constant Voltage)
- Maximum Charging Voltage : 4.225V
- Maximum Charging Current : 600mA
- Nominal Battery Capacity : 900mAh
- Charger Voltage : 5.4V
- Charging time : Max 160min (Except time trickle charging)
- Full charge indication current (icon stop current) : 140mA
- Low battery message : 3.30 ± 0.05V
- Cut-off : [Idle] 60s after power off
  [Call] 80s after power off

Copyright © 2009 LG Electronics. Inc. All right reserved.
Only for training and service purposes

3.9. Memory interface

MSM7200A (processor)

The MSM7200A IC integrates an optional on-chip 32 MB internal DDR SDRAM that is accessed via the SMI bus. Both the SMI and EBI1 buses (EBI1 and SMI bus architectures) are specially designed to provide connectivity between multiple bus masters and their high bandwidth memory controllers. Adopting the advanced extensible interface (AXI) as a standard interface between bus masters and slaves ensures high performance data transfers. The MSM7200A AXI implementation offers many new features relative to previous generation MSM devices that used the AHB bus. For information about AXI, refer to ARM AXI Specification.

The external bus interface 2 (EBI2) is the second of two MSM7200A external memory interfaces. EBI2 provides the interface for slow peripheral devices such as LCDs, NAND flash memory, and the FLO receiver.

• EBI1 Features

General EBI1 features include:

■ Support for only low-power memories at 1.8 V I/O power supply voltage
■ AXI bus frequencies up to 128 MHz
■ Maximum DDR SDRAM frequency up to 128 MHz
■ A 16-bit/32-bit static and dynamic memory interface

• EBI2 Features

The MSM7200A EBI2 interface supports asynchronous memory devices such as FLASH and SRAM (16-bit and 8-bit). Page mode is NOT supported. FLASH and SRAM interface features include:

■ Programmable wait states for access, hold, and recovery on all chip selects.
■ Bus sizing operations allow WORD, HWORD, and BYTE accesses to 16 and 8-bit memory.
■ Insertion of recovery/turnover wait states (RECOV_CYCLES) to the beginning of the current chip select access when the previous access was a read to a different chip select, or a when the current access is a write and the previous access was a read to the same chip select.
■ Addressing to chip select assertion setup wait states (ADDR_CS_SETUP) at the beginning of the access. This supports some types of pseudo-RAMs on the market by providing the required high time for chip select during consecutive accesses.
In general, this feature can be used to provide extra setup time between address and chip select assertion if needed.
■ RD_ACTIVE and WR_ACTIVE define the minimum assertion time for read and write respectively.
■ Since the RECOV_CYCLES and ADDR_CS_SETUP wait states are applied at the beginning of the access, only the field with the greatest number of wait states takes effect.

Copyright © 2009 LG Electronics. Inc. All right reserved.
Only for training and service purposes

LGE Internal Use Only

■ Hold time between WE_N rising and the address/CS_N/data signals changing (WR_CS_HOLD wait states).

■ Hold time between OE_N rising and the address/CS_N signals changing (RD_CS_HOLD wait states), as required by specific types of peripherals. The minimum value (and most commonly used) is RD_CS_HOLD = 0.

■ Supports byte-addressable 16-bit devices (UB_N and LB_N signals).
In addition to asynchronous flash, NAND flash is also supported (8-bit and 16-bit wide).
The EBI2 interface not only supports memory devices, but can be used for parallel, port mapped LCDs. The related features include:

■ Support for both Motorola and Intel timing types (24-bit, 18-bit and 16-bit).

■ Bus sizing operations allow 18-bit write accesses to an 18-bit LCD interface, WORD and HWORD accesses to parallel 16-bit data parallel interfaces, and WORD, HWORD, and BYTE access to parallel 8-bit data interfaces. The resulting software optimization yields more efficient data transfers to and from the LCD.

■ System WORD, HWORD, and BYTE accesses to 16-bit and 8-bit wide devices on all chip selects (bus sizing is supported for all interfaces with the exception of NAND).

■ Support for 18-bit wide devices is write-mode only.

■ Access times of up to 2000 ns (at 66 MHz AHB bus speed).

■ Separate configuration controls for write and read operations.

■ SW controllable write protect feature (against user-mode writes).

■ Specific to the Motorola interface mode:
❒ LCD_E high times of up to 1000 ns (at 75 MHz AHB bus speed).

■ Specific to the Intel Interface mode:
❒ Hold time from WR_N de-asserting to CS_N/RS/address changing and from OE_N de-asserting to CS_N/RS/address changing.
❒ Setup time from RS/address stable to CS_N/OE_N/WE_N asserting.

■ EBI2 I/Os are compatible with either 1.8 V or 2.6 V pad power supply voltages.

■ The EBI2 supports any generic external peripheral whose interface timing is similar to asynchronous memories.

Copyright © 2009 LG Electronics. Inc. All right reserved.
Only for training and service purposes

3.10. H/W Sub System

3.10.1. RF Interface

A. RTR6280 (WCDMA_Tx/Rx)

MSM7200A controls RF part(RTR6280) using these signals.

- SSBDT_RTR : SSBI interface signals to control RTR6280
- RX_I/Q_M/P,TX_I/Q_M/P : I/Q data for Tx/Rx of RF

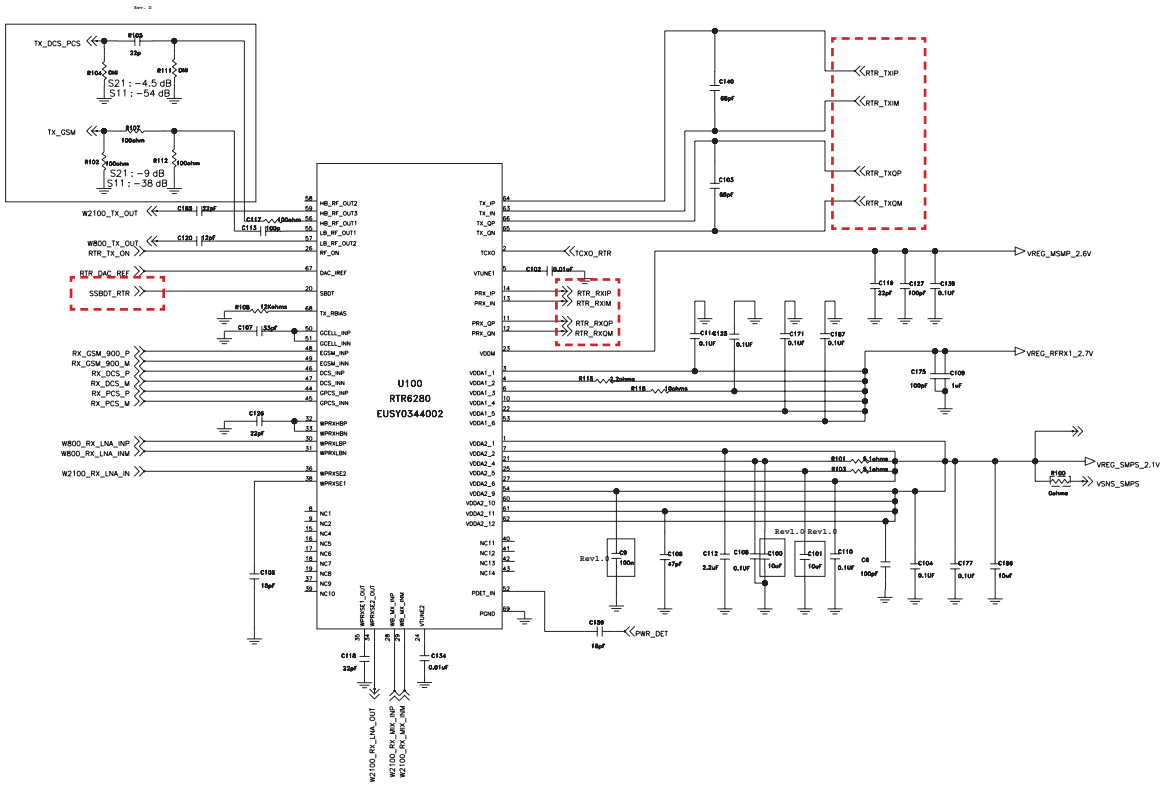

B. The others

- TRK_LO_ADJ : VC-TCXO(19.2MHz) Control
- PA_ON0,1 : WCDMA(2100,800) TX Power Amp Enable
- PA_R0 : Power Amp Mode Control
- GSM_PA_RAMP : GSM Power Amp gain control signal
- GSM_PA_EN : GSM Power Amp Enable
- GSM_PA_BAND : Power Amp Band select Control
- MOBILE_SW_SEL : RF Cable Switch Selection
- RF_MOBILE_DET : RF Cable detect for SPDT Selection
- RF_ACT_N : RF Cable detect in the I/O Connector for SPDT Selection

Copyright © 2009 LG Electronics. Inc. All right reserved.
Only for training and service purposes

LGE Internal Use Only

3.10.2. MSM Sub System

3.10.2.1. USIM Interface

The MSM side is powered by (or referenced to) VREG_MSME or VREG_MSMP voltage (Figure 8-9); the selection is made via SBI. VREG_MSME can be programmed from 0.75V to 3.05 V in 25-mV increments, while the VREG_MSMP options are 1.5 V to 3.05 V in 50-mV increments. The RUIM side is referenced to the VREG_RUIM output that can be set from 1.5 V to 3.05 V in 50 mV increments. Since the two sides (MSM device and RUIM) can run off different voltages, a level-translation is achieved. The RUIM side usually runs off either 1.8 V or 3.0 V.

SIM interface scheme is shown in Figure. And, there control signals are followed

- USIM_CLK : USIM Clock
- USIM_Reset : USIM Reset
- USIM_Data : USIM Data T/Rx

Figure. SIM Interface

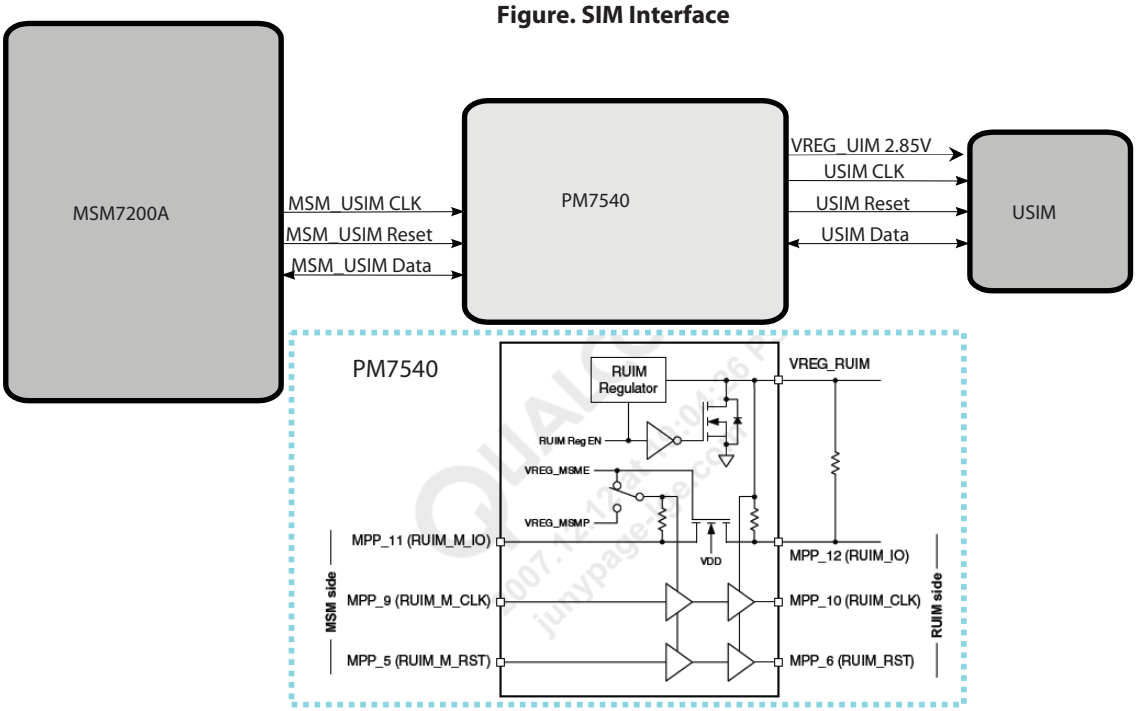

3.10.2.2. UART Interface

The MSM7200A IC is capable of providing up to four Universal Asynchronous Receiver Transmitter (UART) ports. Each MSM7200A UART communicates with serial data ports that conform to the RS-232 interface protocol. With a properly written and user-defined download program, the UART can be used as the handset's serial data port for test and debug and can support additional interface functions such as an external keypad or ringer. If the handset uses EEPROM or flash memory, the UART can be used to load and/or upgrade system software.

Copyright © 2009 LG Electronics. Inc. All right reserved.
Only for training and service purposes

3.10.2.3. USB

The MSM7200A device contains a new USB high-speed function that is based on a embedded UTMI+ core with a UTMI+ low pin interface (ULPI) compatible port. The MSM device's ULPI interface connects to an external ULPI PHY chip to complete the design. The ULPI core embedded in the MSM along with the PM7540 IC and a USB high-speed PHY IC provide support for the high-speed interface.

Signal	Description
USBH_CLK	Input Clock from PHY
USBH_DIR	Controls the direction of USBH_DATA. When high, data is driven into the MSM.
USBH_NEXT	Used by the PHY to throttle data.
USBH_STOP	Signals the end of a USB transmit packet or a register write operation, and optionally stops any receive.
USBH_DATA[0:7]	Bi-directional data pin
USB_VBUS	USB Power From Host (PC)

Table. USB Signal Interface

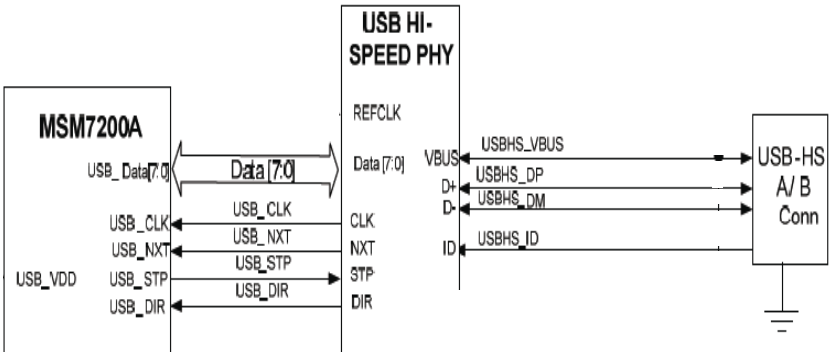

Figure. L-04A USB Interface

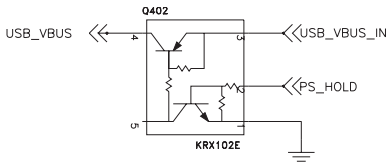

Figure. USB VBUS protective circuit

L-04A has a protective circuit for non-booting from USB. When the phone is booted from USB_VBUS without Battery, booting current might be insufficient. Sometimes, this scheme can break the USB port on a computer. So, L-04A does not support booting from USB.

Copyright © 2009 LG Electronics. Inc. All right reserved.
Only for training and service purposes

LGE Internal Use Only

3.10.3 HKADC(House Keeping ADC)

The MSM7200A device has an on-chip 12-bit analog-to-digital converter (ADC) that is available for digitizing analog signals representing parameters such as battery voltage, temperature, and RF power levels. These parameters support handset-level housekeeping functions — various tasks that must be performed to keep the "house," or handset, in order. Thus the term housekeeping ADC (HKADC) is used.

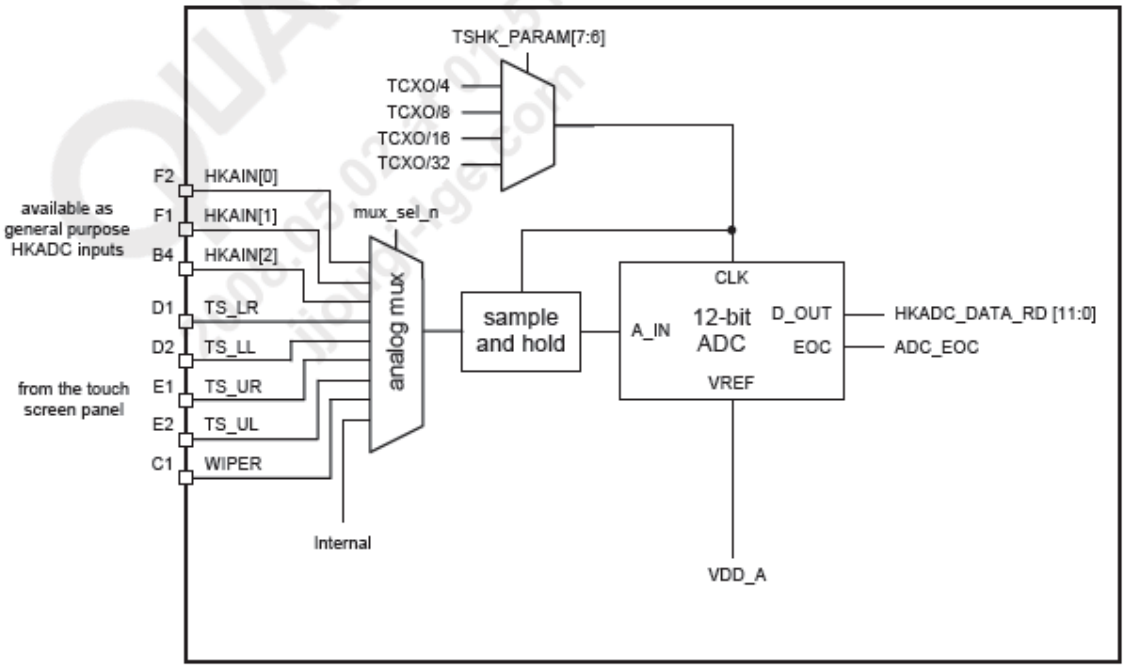

Figure. MSM7200AHKADC Functional Block diagram

Channel	Signal	Note
HKAIN[0]	**VBATT_TEMP**	Battery Temperature Check
HKAIN[1]	**VBATT_SENSE**	Battery voltage level detect
HKAIN[2]	**AMUX_OUT**	Delivery the battery voltage from PMIC to MSM

Table. HKADC channel table

Copyright © 2009 LG Electronics. Inc. All right reserved.
Only for training and service purposes

3.10.4. Key Pad

There are 25 buttons and 5 side keys in Figure. Shows the Keypad circuit. 'END' Key is connected Key_On_SW_N to PMIC(PM7540).

	COL(0)	COL(1)	COL(2)	COL(3)	COL(4)	COL(5)
ROW(0)	UP	DOWN	MAIL	IMODE	S_UP	CAMERA
ROW(1)	LEFT	RIGHT	MENU	CH	S_DOWN	
ROW(2)	SEND	CLR	NUM0	NUM1	NUM2	SHARP
ROW(3)	OK	GOOGLE	NUM3	NUM4	NUM5	NUM6
ROW(4)	LOCK	MULTI	NUM7	NUM8	NUM9	STAR

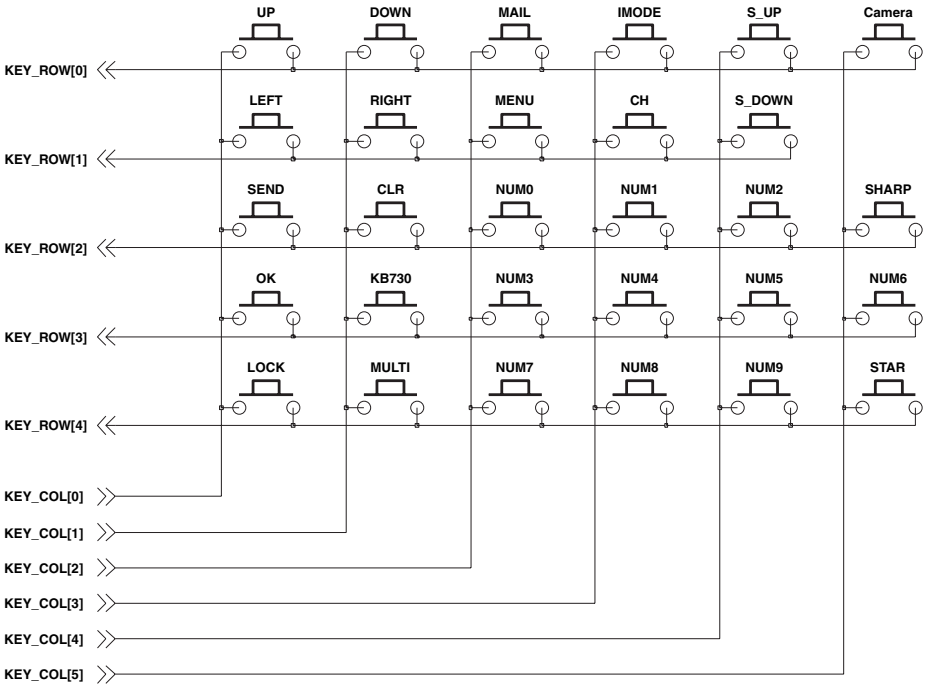

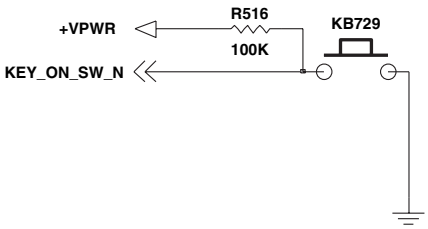

Copyright © 2009 LG Electronics. Inc. All right reserved.
Only for training and service purposes

LGE Internal Use Only

3.10.5 Camera Interface

L-04A Installed VGA(0.3 mega Pixel) Camera and 5 Mega Pixel Auto Focus Camera. Below figure shows the camera board to board connector and camera I/F signal.

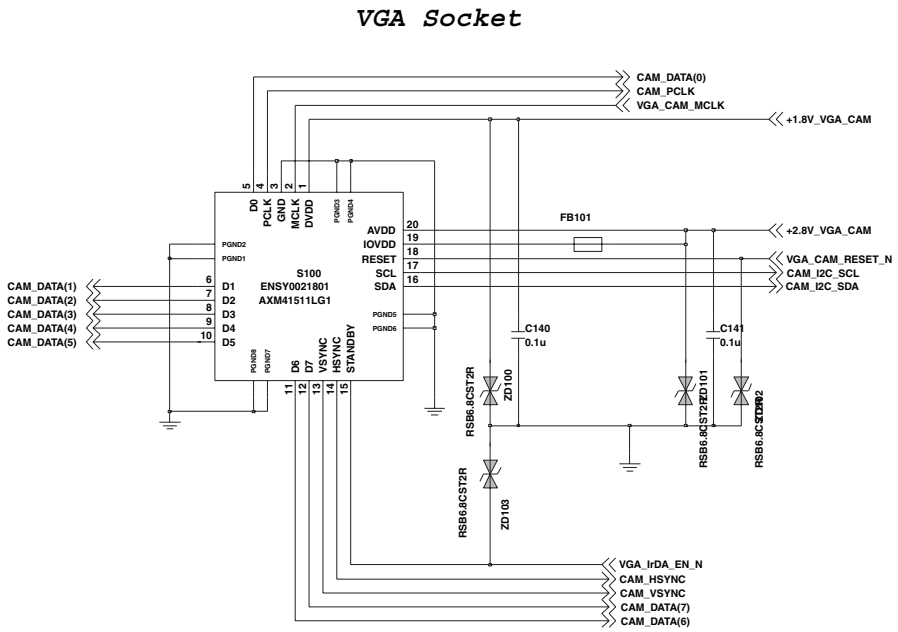

Figure. VGA Camera Socket 20Pin Connector on the Folder PCB and VGA Camera Socket Cover

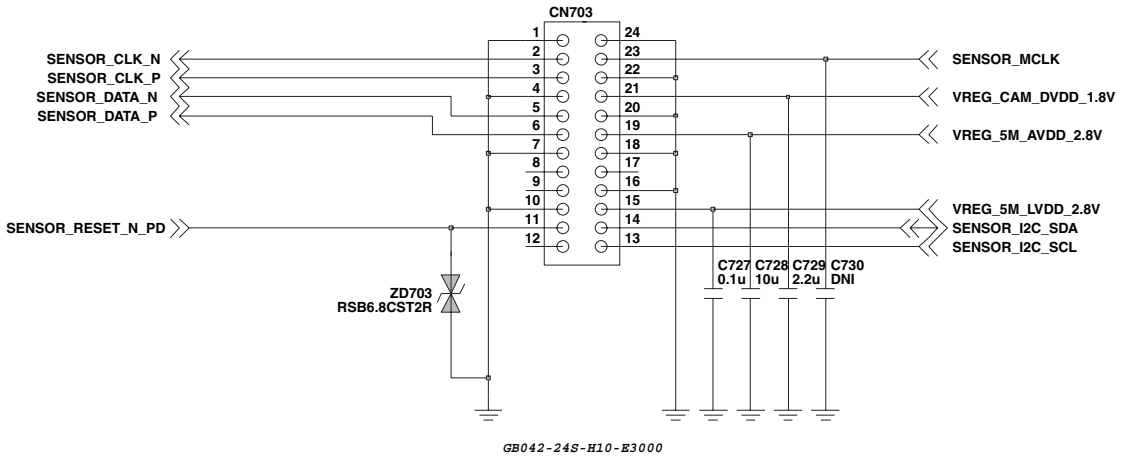

Figure. 5 Mega Camera module and SUB RFPCB 24Pin Board to Board Connector

Copyright © 2009 LG Electronics. Inc. All right reserved.
Only for training and service purposes

VGA Camera module is connected to Folder PCB with 20pin Camera Socket connector The external oscillator supplies 24MHz master clock to camera module and is received 25.8 MHz pixel clock, vertical sync signal, horizontal sync signal, reset signal and 8bits data from camera module. The camera module is controlled by I2C port from MSM7200A.

No	Name	Port	Note
1	DVDD	I	Camera DVDD 1.8V
2	VGA_CAM_MCLK	I	Master Clock Input
3	GND	GND	Ground
4	CAM_PCLK	O	Pixel Clock Output
5	CAM_DATA(0)	O	Parallel Pixel Data 0
6	CAM_DATA(1)	O	Parallel Pixel Data 1
7	CAM_DATA(2)	O	Parallel Pixel Data 2
8	CAM_DATA(3)	O	Parallel Pixel Data 3
9	CAM_DATA(4)	O	Parallel Pixel Data 4
10	CAM_DATA(5)	O	Parallel Pixel Data 5
11	CAM_DATA(6)	O	Parallel Pixel Data 6
12	CAM_DATA(7)	O	Parallel Pixel Data 7
13	CAM_VSYNC	O	Vertical Sync output
14	CAM_HSYNC	O	Horizontal Sync output
15	VGA_IrDA_EN_N	I	Camera Power down (Active “H”)
16	CAM_I2C_SDA	B	Serial I2C Data
17	CAM_I2C_SCL	B	Serial I2C Clock
18	VGA_CAM_RESET_N	I	Camera Reset input
19	+2.8V_VGA_CAM	I	Camera I/O Power 2.7V
20	+2.8V_VGA_CAM	I	Camera Analog Power 2.8V

Table. Interface between VGA Camera module (in camera module)

Copyright © 2009 LG Electronics. Inc. All right reserved.
Only for training and service purposes

LGE Internal Use Only

5 Mega Camera module is connected to SUB RFPCB with 24pin Board to Board connector.

This interface is dedicated camera interface port in Camera ISP and also MSM7200A.

The camera port supply 27 MHz master clock to camera module and is received 54 MHz pixel clock , vertical sync signal, horizontal sync signal, reset signal and 8bits data from camera ISP. The camera module is controlled by I2C port from MSM7200A.

No.	Name	Port	Note
1	GND	GND	Ground
2	SENSOR_CLK_N	O	Serial clock (Negative)
3	SENSOR_CLK_P	O	Serial clock (Positive)
4	GND	GND	Ground
5	SENSOR_DATA_N	O	Serial Data (Negative)
6	SENSOR_DATA_P	O	Serial Data (Positive)
7	GND	GND	Ground
8	NC		No Connection
9	NC		No Connection
10	GND	GND	Ground
11	SENSOR_RESET_N_PD	I	X shut down(Active “L”)
12	NC		No Connection
13	SENSOR_I2C_SCL	B	Serial interface clock
14	SENSOR_I2C_SCL	B	Serial interface data
15	VREG_5M_LVDD_2.8V	I	VCM&Driver IC Power 2.8V
16	GND	GND	Ground
17	NC		No Connection
18	GND	GND	Ground
19	VREG_5M_AVDD_2.8V	I	Analog Power 2.7V
20	GND	GND	Ground
21	VREG_CAM_DVDD_1.8V	I	Digital Power 1.8V
22	GND	GND	Ground
23	SENSOR_MCLK	I	Master Clock Input
24	GND	GND	Ground

Table. Interface between 5 Mega Camera Module and Camera ISP

Copyright © 2009 LG Electronics. Inc. All right reserved.
Only for training and service purposes

3.10.6. Folder ON/OFF & Swivel ON/OFF Operation

There is a magnet to detect the Slide ON/OFF status and there is a speaker to detect the Swivel ON/OFF status.

If a magnet is close to the hall-effect switch, the voltage at pin-out of Hall-effect switch goes to 0V. Otherwise, 2.7V. This SLIDE_DET_N signal and SWIVEL_DET_N signal are delivered to MSM7200A.

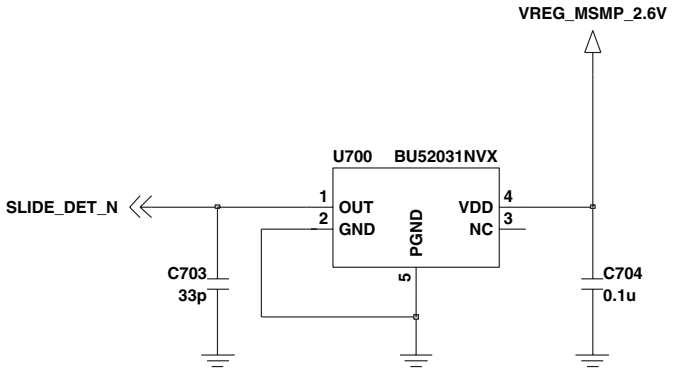

Figure. Schematic of Folder ON/OFF detection circuit at KEY FPCB

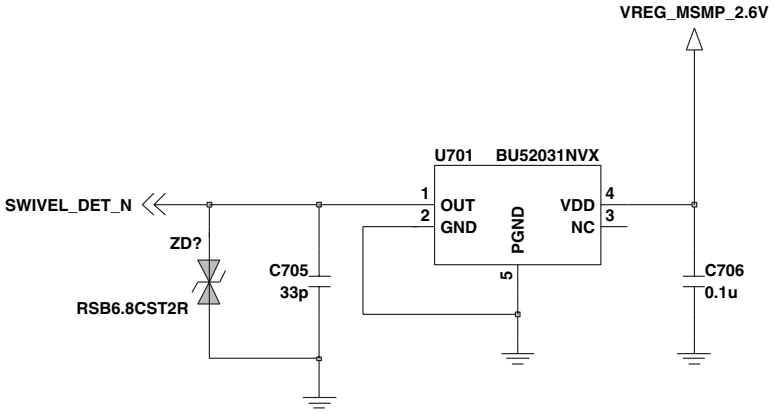

Figure. Schematic of Swivel ON/OFF detection circuit at KEY FPCB

Copyright © 2009 LG Electronics. Inc. All right reserved.
Only for training and service purposes

LGE Internal Use Only

3.10.7. Numeric Keypad LED Light & NAVI-Keypad LED Light

There are 2 White LEDs in KEY-FPCB, which are driven by KEY_LED_DRV_N line from PM7540.

Figure. Numeric Keypad lighting Circuit

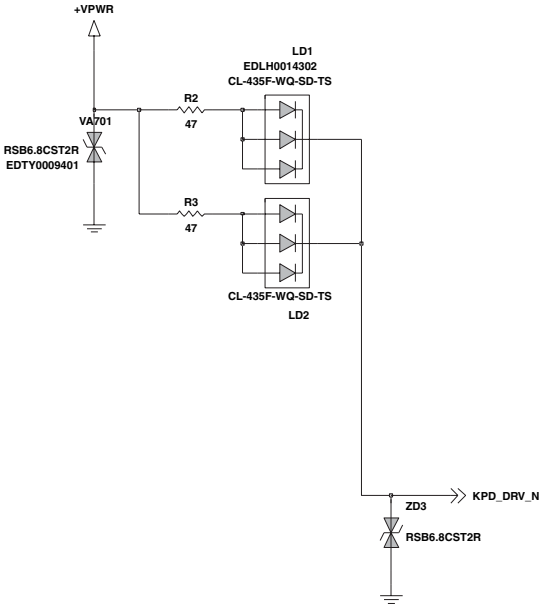

There are 7 White LEDs in NAVIKEY PCB, which are driven by NAVIKEY_LED_DRV_N line from PM7540.

Figure. NAVI-KEY LED lighting Circuit

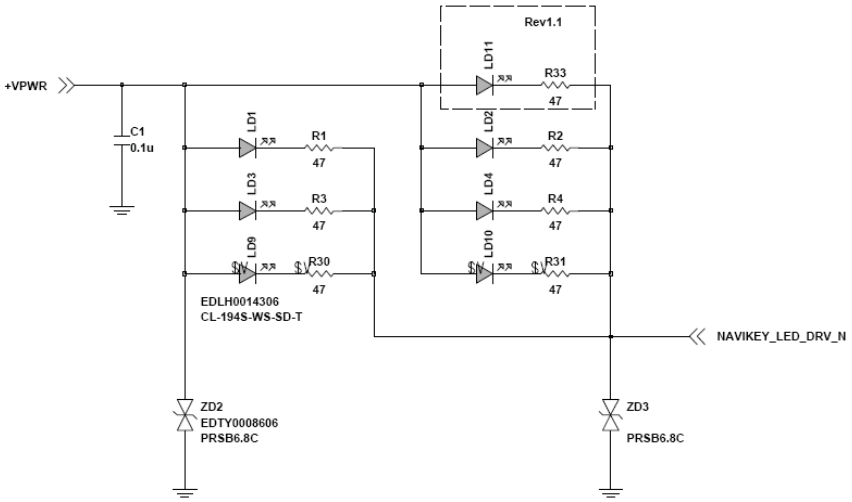

Copyright © 2009 LG Electronics. Inc. All right reserved.
Only for training and service purposes

3.10.8. LCD Module (DX08D11VM0AAA : Hitachi LCD module)

- The DX08D11VM0AAA model is a Color TFT Main LCD Module. It is supplied by Hitachi Display Ltd.

This main Module has a 3.0 inch diagonally measured active display area with 480 X 3(R,G,B)(W) X 800(H) dots resolution. Each pixel is divided into Red, Green and Blue sub-pixels and dots which are arranged in vertical stripes.

* Features

- Display mode(Main LCD) : Transmissive Type, Normally Black Mode, In-Plane Switching Mode
- LCD Driver IC & Driving Method : R69311(Source, Gate and Power IC), A-Si TFT Active Matrix
- Interface : 18-bit/24-bit RGB Interface + SPI (Clock synchronous serial interface)

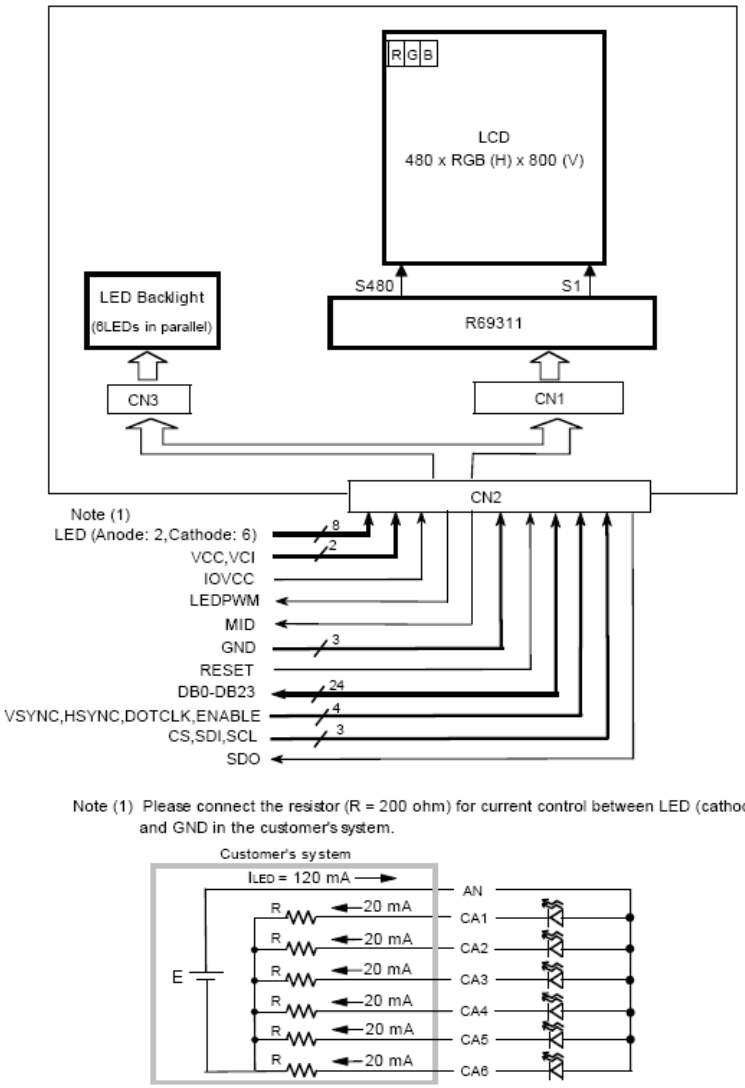

Figure. LCD Module Block Diagram

Copyright © 2009 LG Electronics. Inc. All right reserved.
Only for training and service purposes

LGE Internal Use Only

3.10.9. LCD Module Interface

LCD module is connected to 49-pin zip connector (04-6293-049-001-829)
The LCD module is controlled by EBI2 DB port from MSM7200A.

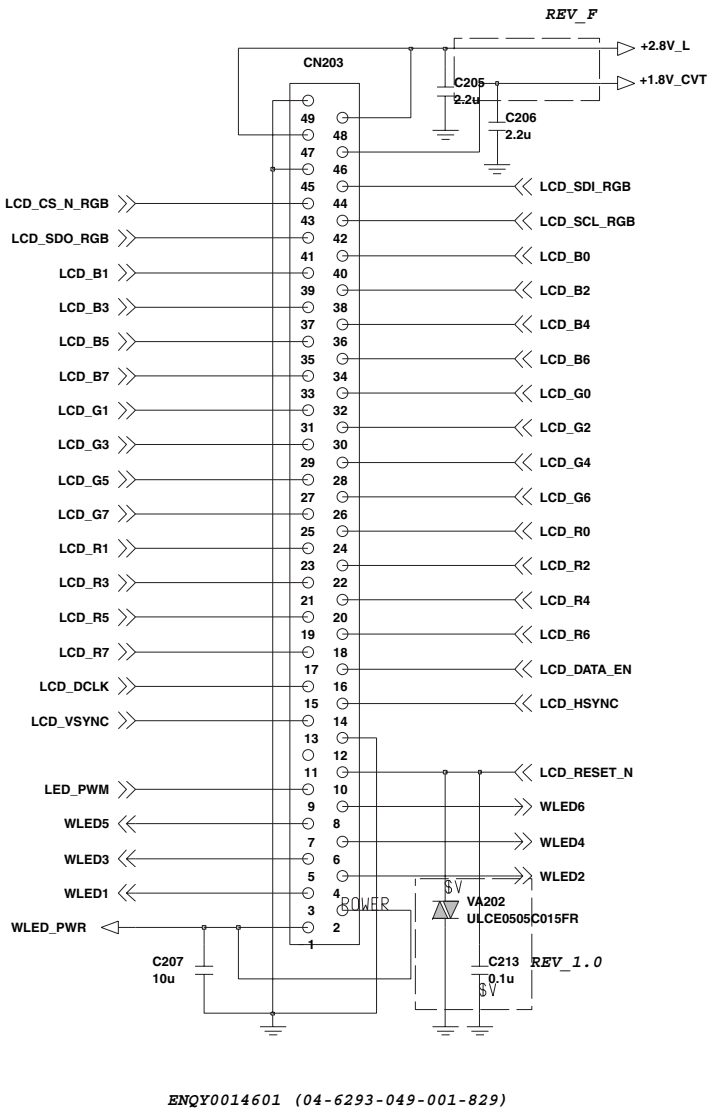

Figure. LCD Module 37 Pin Zip Connector (04-6293-049-001-829)

Copyright © 2009 LG Electronics. Inc. All right reserved.
Only for training and service purposes

No.	Name	No.	Name
1	WLED_PWR	26	LCD_G6
2	WLED_PWR	27	LCD_G5
3	WLED_1	28	LCD_G4
4	WLED_2	29	LCD_G3
5	WLED_3	30	LCD_G2
6	WLED_4	31	LCD_G1
7	WLED_5	32	LCD_G0
8	WLED_6	33	LCD_B7
9	LED_PWM	34	LCD_B6
10	LCD_RESET_N	35	LCD_B5
11		36	LCD_B4
12	Ground	37	LCD_B3
13	LCD_VSYNC	38	LCD_B2
14	LCD_HSYNC	39	LCD_B1
15	LCD_DCLK	40	LCD_B0
16	LCD_DATA_EN	41	LCD_SDO_RGB
17	LCD_R7	42	LCD_SCL_RGB
18	LCD_R6	43	LCD_CS_N_RGB
19	LCD_R5	44	LCD_SDI_RGB
20	LCD_R4	45	Ground
21	LCD_R3	46	+1.8V_CVT
22	LCD_R2	47	+2.8V_L
23	LCD_R1	48	+2.8V_L
24	LCD_R0	49	Ground
25	LCD_G7		

Table. Interface between LCD module and Slide FPCB

Copyright © 2009 LG Electronics. Inc. All right reserved.
Only for training and service purposes

LGE Internal Use Only

3.10.10.1. Audio Signal Processing & Interface

Audio signal processing is divided uplink path and downlink path.

The uplink path amplifies the audio signal from MIC and converts this analog signal to digital signal and then transmits it to DBB Chip (MSM7200A).

This transmitted signal is reformed to fit in GSM & WCDMA frame format and delivered to RF Chipset. The downlink path amplifies the signal from DBB chip (MSM7200A) and outputs it to receiver (or speaker).

The receive path can be directed to either one of two earphone amplifiers or the auxiliary output.

The outputs earphone1 (EAR1OP, EAR1ON) and auxiliary out (AUXOP, AUXON) are differential outputs. Earphone2 (EAR2/EAR3) is a single-ended output stage designed to drive a headset speaker.

The microphone interface consists of two differential microphone inputs, one differential auxiliary input and a two-stage audio amplifier.

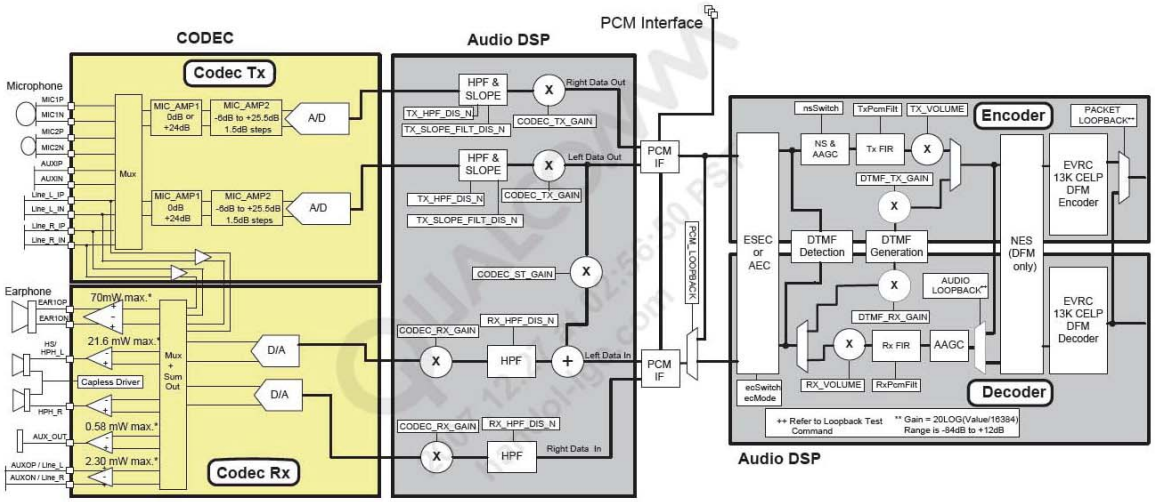

Figure 10-1 Codec, audio DSP, and PCM interface

Figure. Audio Interface Detailed Diagram(MSM7200A)

Copyright © 2009 LG Electronics. Inc. All right reserved.
Only for training and service purposes

MSM7200A Audio part

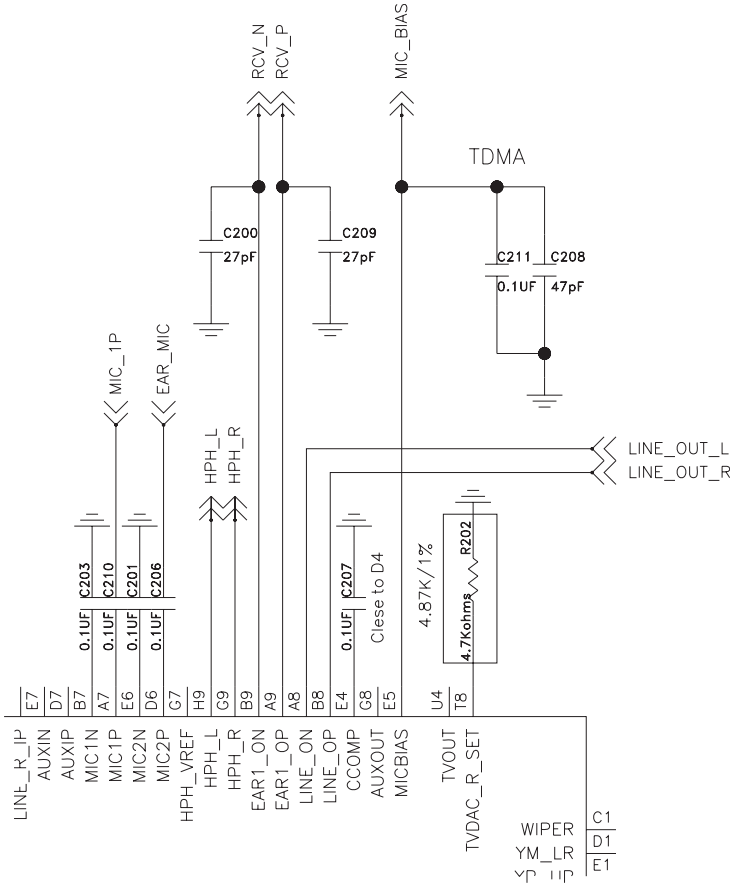

Figure . Audio part schematics

Copyright © 2009 LG Electronics. Inc. All right reserved.
Only for training and service purposes

LGE Internal Use Only

Ear Jack & I/O connector

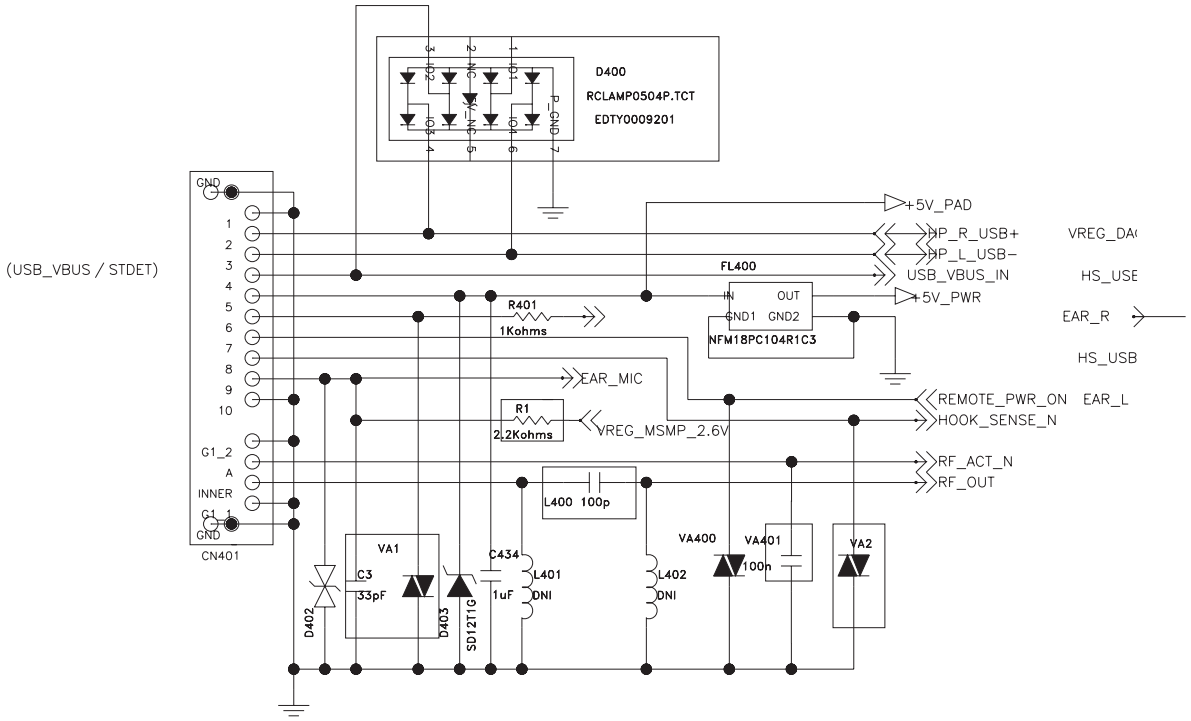

Figure . Audio part schematics

Copyright © 2009 LG Electronics. Inc. All right reserved.
Only for training and service purposes

Audio Sub system

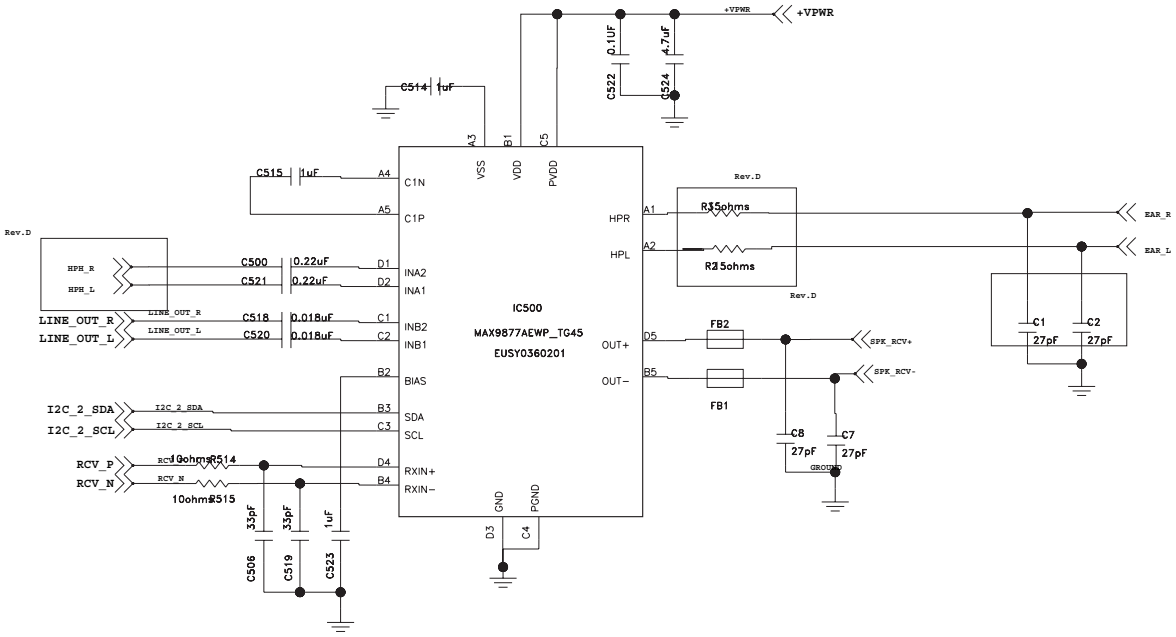

MIC

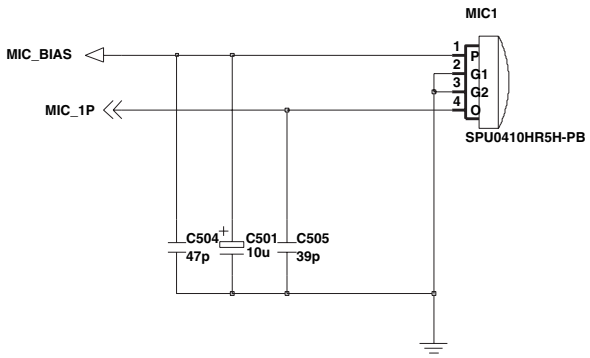

Figure . Audio part schematics

Copyright © 2009 LG Electronics. Inc. All right reserved.
Only for training and service purposes

LGE Internal Use Only

3.10.10.2. Audio Mode

There are four audio modes (Voice call, speaker phone, VT phone, MIDI/SD contents).

MODE	Device	Description
Voice Call	Receiver Mode	Receiver Voice Call
	Loud Mode	Speaker Phone
	Headset	Headset Voice Call
VT phone	Receiver Mode	Receiver VT phone
	Loud Mode	Speaker VT phone
	Headset	Headset VT phone
Speaker phone	Loud Mode	Speaker Phone
MIDI	Loud Mode	Speaker MIDI Bell
	Headset	Headset MIDI Bell
SD contents	Loud Mode	Speaker MP3
	Headset	Headset MP3

Table. Audio Mode

Audio & Sound Main Component

There are 6 main components in L-06A.

	Component	Design No.	Maker Part No.	Note
1	MSM7200A	U200	MSM7200A	Base-Band Modem
2	Ear jack & I/O CON	CN401	RA1R011H11	Common use I/O Connector
3	Audio sub system	IC500	MAX9877AEWP_TG45	Class D AMP and stereo Class AB HP AMP
4	Speaker & Receiver		EMS1810TVC2P	8 ohm Speaker
5	MIC	MIC1	SPU0410HR5H-PB	-42 dB microphone

Table. Audio main component list

Copyright © 2009 LG Electronics. Inc. All right reserved.
Only for training and service purposes

3.11 Main Features

1. L-06A Main features

- Mech. : Intenna Swivel Folder
- RF : WCDMA with HSUPA (Category 6)
  - UMTS : 800 / 2100 , GSM 900/1800/1900
- Modem : MSM7200A
- Display : 3.0" (480x800), WVGA TFT
- Camera : 5M(CMOS,AF) + 0.3M(VT)
- Memory : 4Gb NAND / 2Gb SDRAM & Ext. Memory (micro SD)
- MIDI : 128 poly and MFI 4
- Battery : 900mAh UF463450F (Li-ion) / Sanyo
- Connectivity : USB 2.0, IrDA (Remote Control)
- SPK/RCV : 18x10 1EA
- DMB : 1Seg With BML
- User Interface : Touch Screen & Touch PAD (Finger PAD only) with Vibration feedback (Linear Motor)
- I/O : ARIB Type A I/O (ARIB + Headset)
- Other : Full-Browser, Multi Language , 3-axis sensor

Copyright © 2009 LG Electronics. Inc. All right reserved.
Only for training and service purposes

LGE Internal Use Only

2. L-06A Main Component

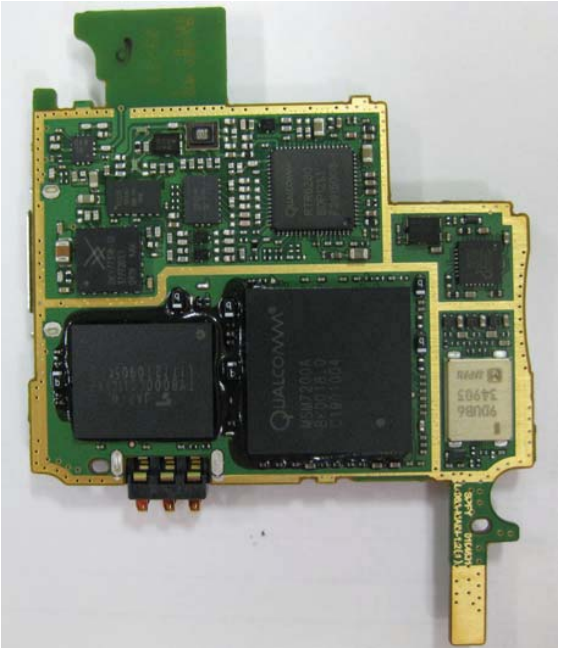

Main board, TOP

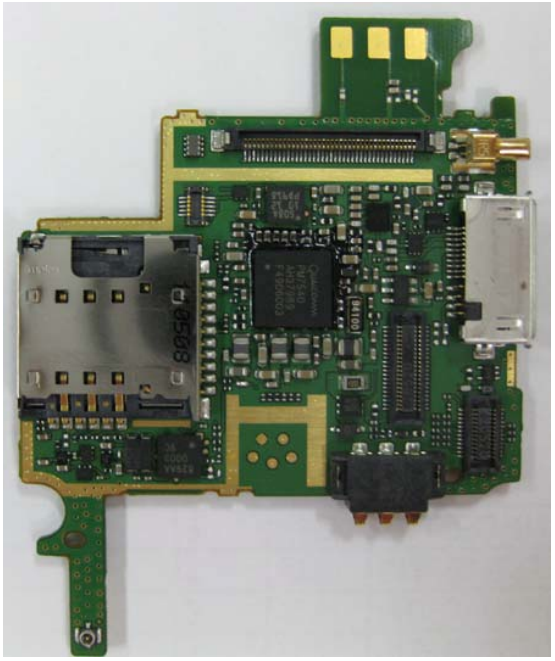

Main board, Bottom

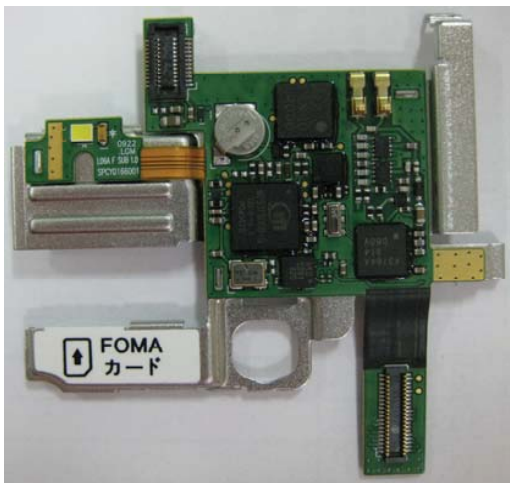

SUB FPCB ASSY, Bottom

Copyright © 2009 LG Electronics. Inc. All right reserved.
Only for training and service purposes

2. L-06A Main Component

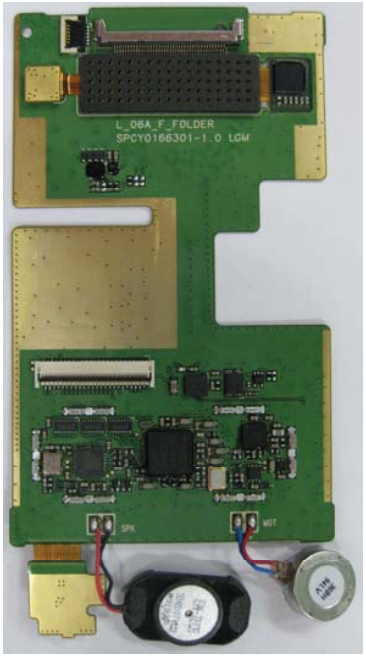

FOLDER FPCB, TOP

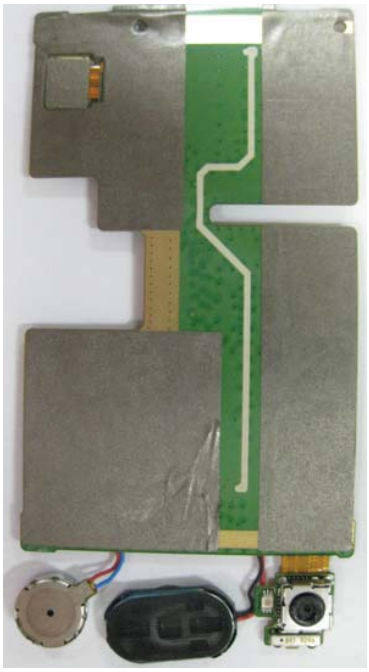

FOLDER FPCB, BOTTOM

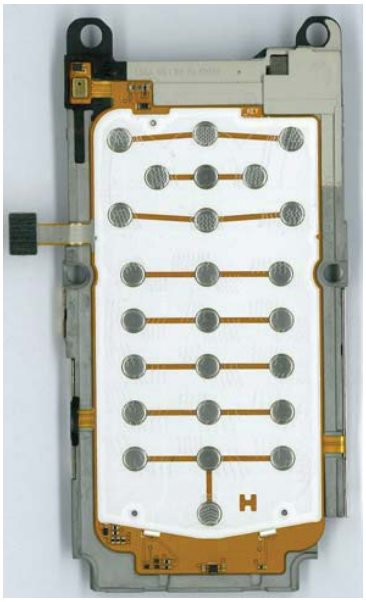

KEY FPCB ASSY, TOP

KEY FPCB ASSY, Bottom

Copyright © 2009 LG Electronics. Inc. All right reserved.
Only for training and service purposes

LGE Internal Use Only

- Logic

Main board, TOP

Reference	Part Number	Description
U200	MSM7200	Modem Processor
U300	TYB000CC11CFKP	Memory (4G NAND, 2G SDRAM)
U603	ANA5252LG	Camera SerDes
X100	TG-5010LH(19.2M)-75A	VCTCXO

< Main board, TOP >

Copyright © 2009 LG Electronics. Inc. All right reserved.
Only for training and service purposes

- Logic

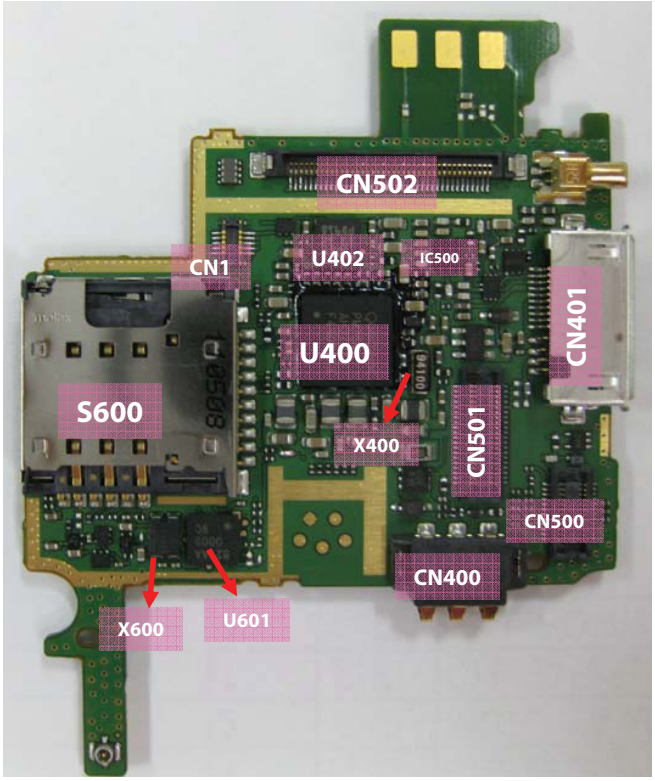

Main board, Bottom

Reference	Part Number	Description
U400	PM7540	Power Management IC
U402	ISP1508AET	USB2.0 Transceiver
IC500	MAX9877AEWP+TG45	Audio Sub System
U601	MN66829AARFY	CPRM
X400	CM315(12.5PF)	X-TAL
X600	TG-5010LH(19.2M)-75A	VCTCXO
CN1	AXT610124	JTAG Connector
CN400	KQ03LE-3R	Battery Connector
CN401	RA1R011HA1	ARIB-A I/O Connector
CN500	GB042-24S-H10-E3000	KEY FPCB Connector
CN501	GB042-40S-H10-E3000	ARIB-A I/O Connector
CN502	20374-040E-21	Main to Folder Connector
S600	49448-1611	Micro SD Dupli-Socket

<Main board, Bottom>

Copyright © 2009 LG Electronics. Inc. All right reserved.
Only for training and service purposes

LGE Internal Use Only

- RF

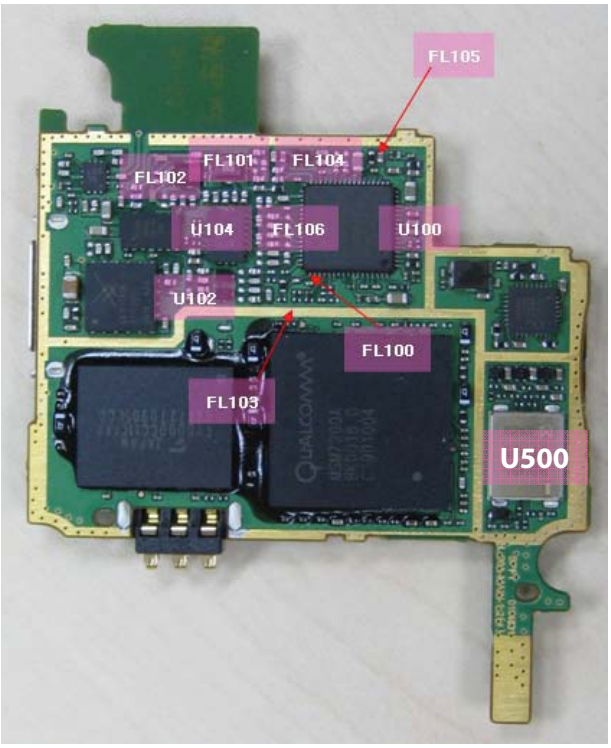

Main board, TOP

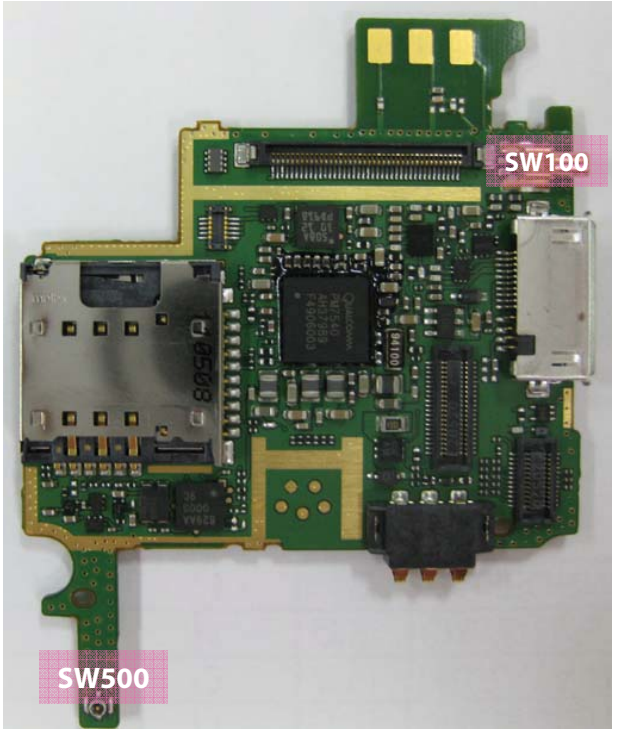

Main board, Bottom

Reference	Part Number	Description
FL102	XM0830SA-BL1301	SPDT for ARIB
FL101	W2100 duplexer	UMTS 2100 Duplexer
U104	AWT6222R	UMTS DUAL PAM
U102	SKY77318	GSM PAM
FL103	SAFEB836MAL0F00	UMTS 800 TX SAW
FL104	B7683	UMTS 800 Duplexer
FL105	SAFEB2G14FA0F00	UMTS 2100 RX SAW
U100	RTR6280	UMTS Transceiver
FL106	LMSP43QL-771	FEM(SWITCHPLEXER)
FL100	SAFEB1G95KA0F00	UMTS 2100 TX SAW
U500	ENT34903F	ISDB-T Module (DMB)
SW100	KMS-506	RF Mobile Connector
SW500	W.FL-R-SMT(10)	1-Seg Coaxial Cable Connector

< RF Part >

Copyright © 2009 LG Electronics. Inc. All right reserved.
Only for training and service purposes

- SUB FPCB

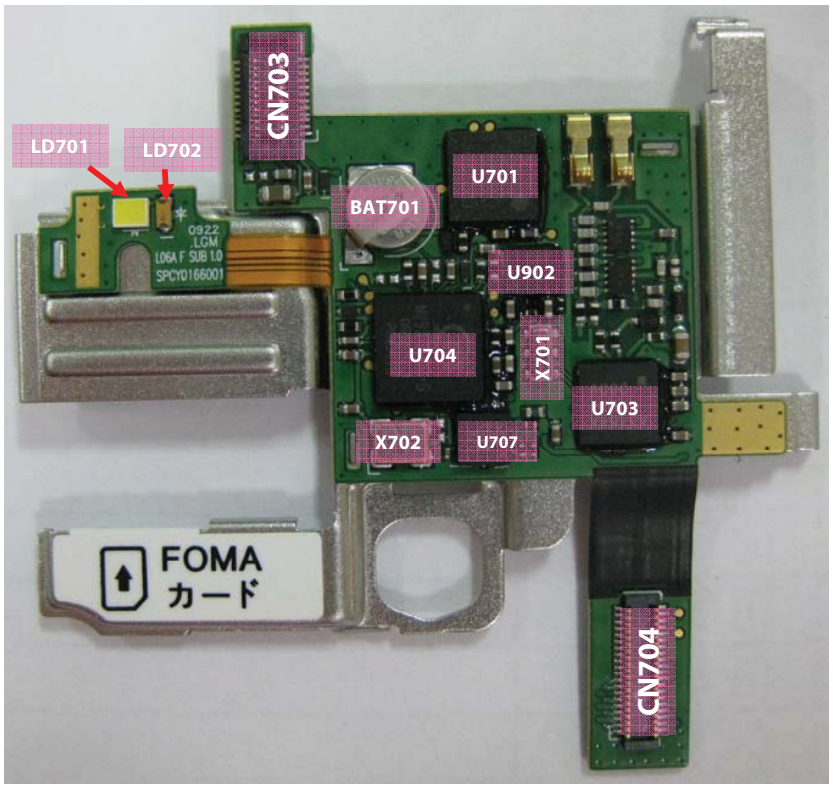

SUB FPCB ASSY, Bottom

Reference	Part Number	Description
CN703	GB042-24S-H10-E3000	5M Camera Connector
CN704	GB042-40P-H10-E3000	MAIN to SUB PCB Connector
U701	HD65256D	Felica_BB_DBP
U703	CXA3764AGG	Felica_RF_Tuner
U704	QSMT-FJ31-AB000	AF LED
U707	MV9319	ISP for 5M CAM
U902	BU80003GUL	Felica s/w Controller
X701	CSTCE27M1XT1K99-R0	Resonator for Felica
X702	CSC3R270000BEVRS00	Oscillator for CAM ISP
BAT701	NBL414L/F9JE	Back-up battery
LD701	CL-770S-4WN-SD-T	Flash LED
LD702	CL-197TD2-CD-T	Camera Indicator LED

< SUB FPCB ASSY, Bottom >

Copyright © 2009 LG Electronics. Inc. All right reserved.
Only for training and service purposes

LGE Internal Use Only

- Folder FPCB

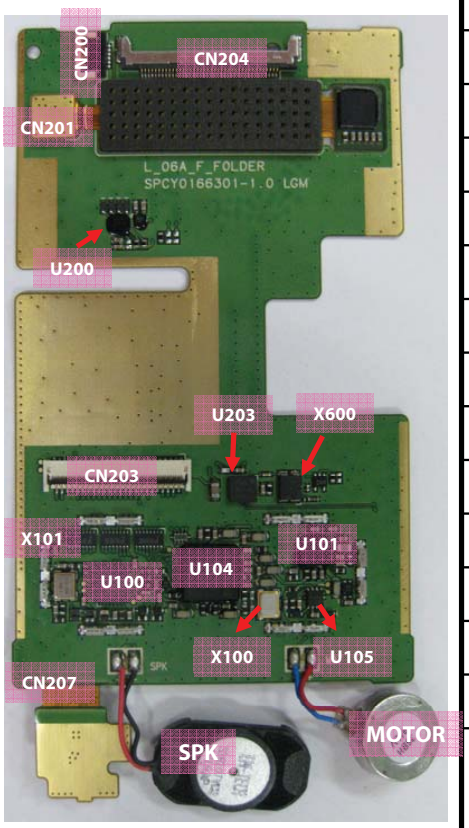

FOLDER FPCB, TOP

Reference	Part Number	Description
SPK	EMS1810TVC2P	Speaker / Receiver
MOTOR	DMJBRN1036BH	Vibrator, Motor
U100	ANA5252LG	Camera SerDes
U101	BD6083GUL	Sub PMIC
U104	S1D13775B00B60L	MDDI VGA Convertor
U105	ISA1000	Linear Motor Dirver
U200	TSC2007IYZGR	Touchscreen Controller
U203	BU7876GLS	RC Fomatter
X100	FA-238(27M, 9PF)	X-TAL
X101	CSC6R240000BEVRS00	OSCILLATOR
X600	TG-5010LH(19.2M)-75A	VCTCXO
CN200	04-6298-706-000-883+	Touch Window Connector
CN201	AXK7L10227G	LED Matrix Connector
CN203	04-6293-049-001-829+	LCD Module Connector
CN204	20347-040E-02	Folder to Main Connector
CN205, CN206, CN207, CN208, CN209, CN210	KQ08A1-1.2H	Folder shield can Clip

< FOLDER FPCB, TOP>

Copyright © 2009 LG Electronics. Inc. All right reserved.
Only for training and service purposes

- Folder FPCB

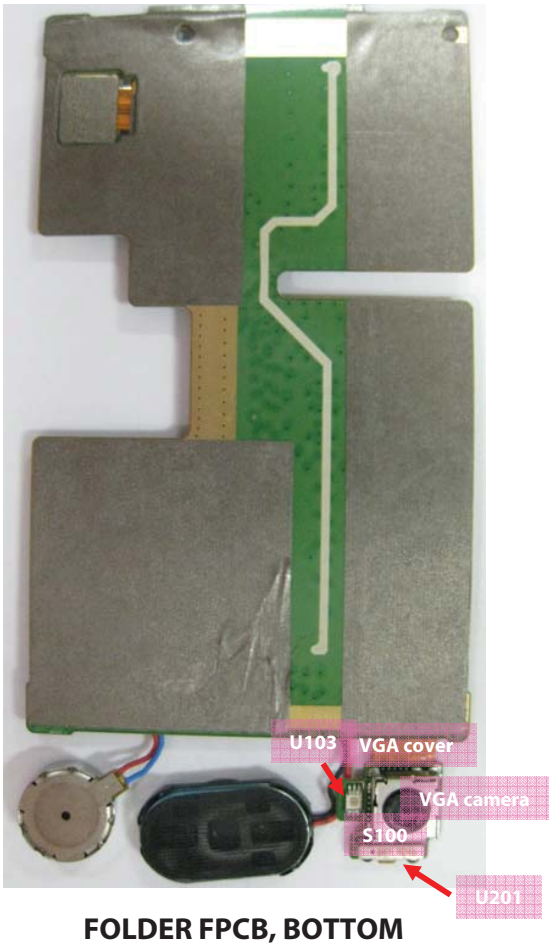

FOLDER FPCB, BOTTOM

Reference	Part Number	Description
U103	BH1600FVC-TR	Luminance sensor
U201	RPM840-H11/RPM841-H11	IrDA
S100	AXM41511LG1	VGA socket
VGA cover	AXM44502LG1	VGA cover
VGA camera	LM02MI	VGA camera

< FOLDER FPCB, BOTTOM >

Copyright © 2009 LG Electronics. Inc. All right reserved.
Only for training and service purposes

LGE Internal Use Only

- KEY FPCB

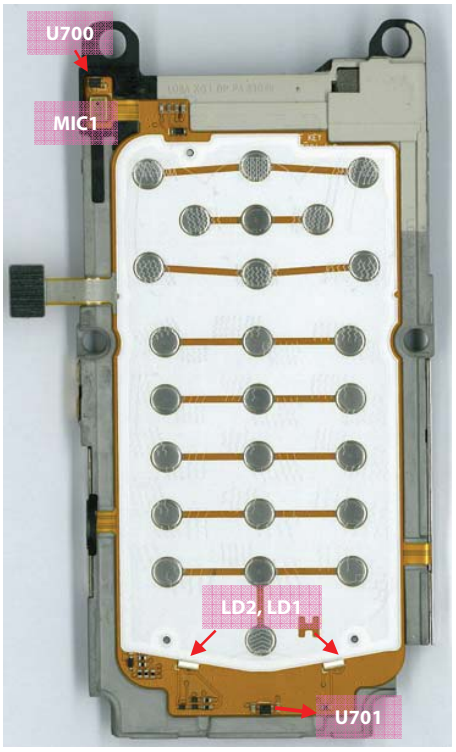

KEY FPCB ASSY, TOP

KEY FPCB ASSY, Bottom

Reference	Part Number	Description
U700, U701	BU52031NVX	Hall Sensor
MIC1	SPU0410HR5H -PB	MIC
LD2, LD1	CL-435F-WQ-SD-TS	DIODE, LED

< KEY FPCB ASSY, TOP >

Reference	Part Number	Description
CN700	GB042-24P-H10-E3000	Key Connector
ANT500	W.FL-R-SMT(10)	1-Seg Coaxial Cable Connector
5M camera	C5AA-Y245A	5M camera
CABLE,COAXIAL	W.FL-2LPHF-04N1TC-A-28LG	CABLE,COAXIAL

< KEY FPCB ASSY, Bottom >

Copyright © 2009 LG Electronics. Inc. All right reserved.
Only for training and service purposes

4. TROUBLE SHOOTING

4.1. Checking VCXO Block

The reference frequency (19.2MHz) from X100 (TCXO) is used in UMTS TX part, GSM part and BB part.

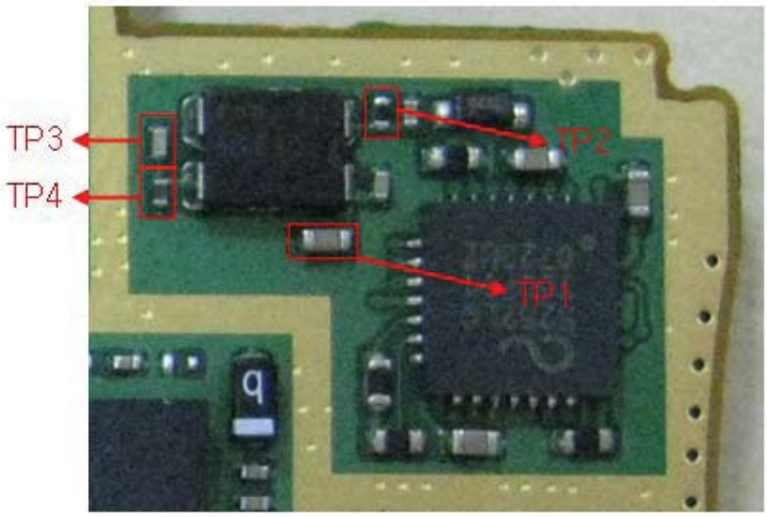

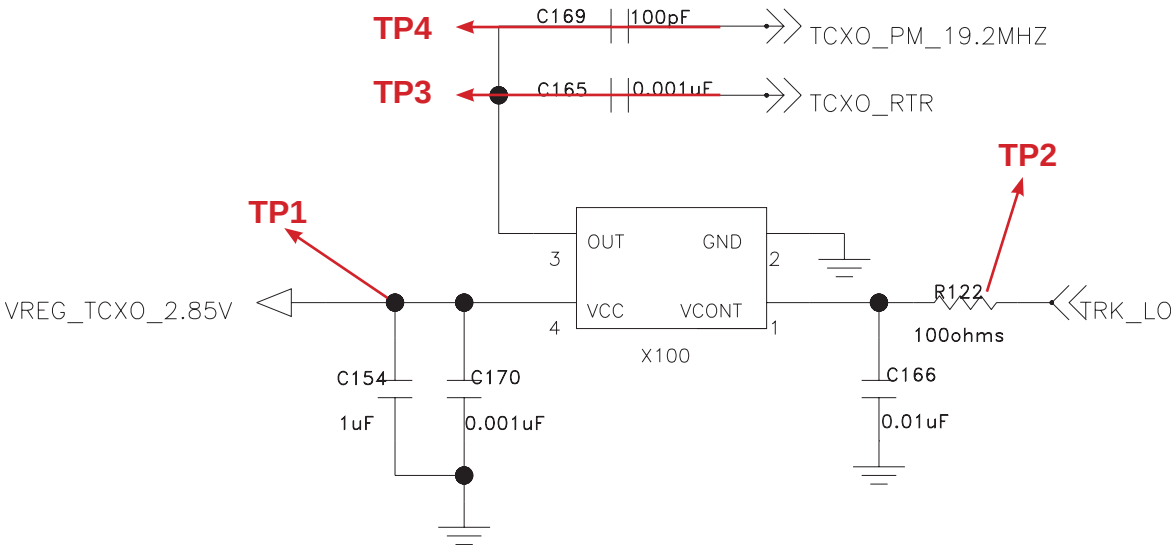

Copyright © 2009 LG Electronics. Inc. All right reserved.
Only for training and service purposes

LGE Internal Use Only

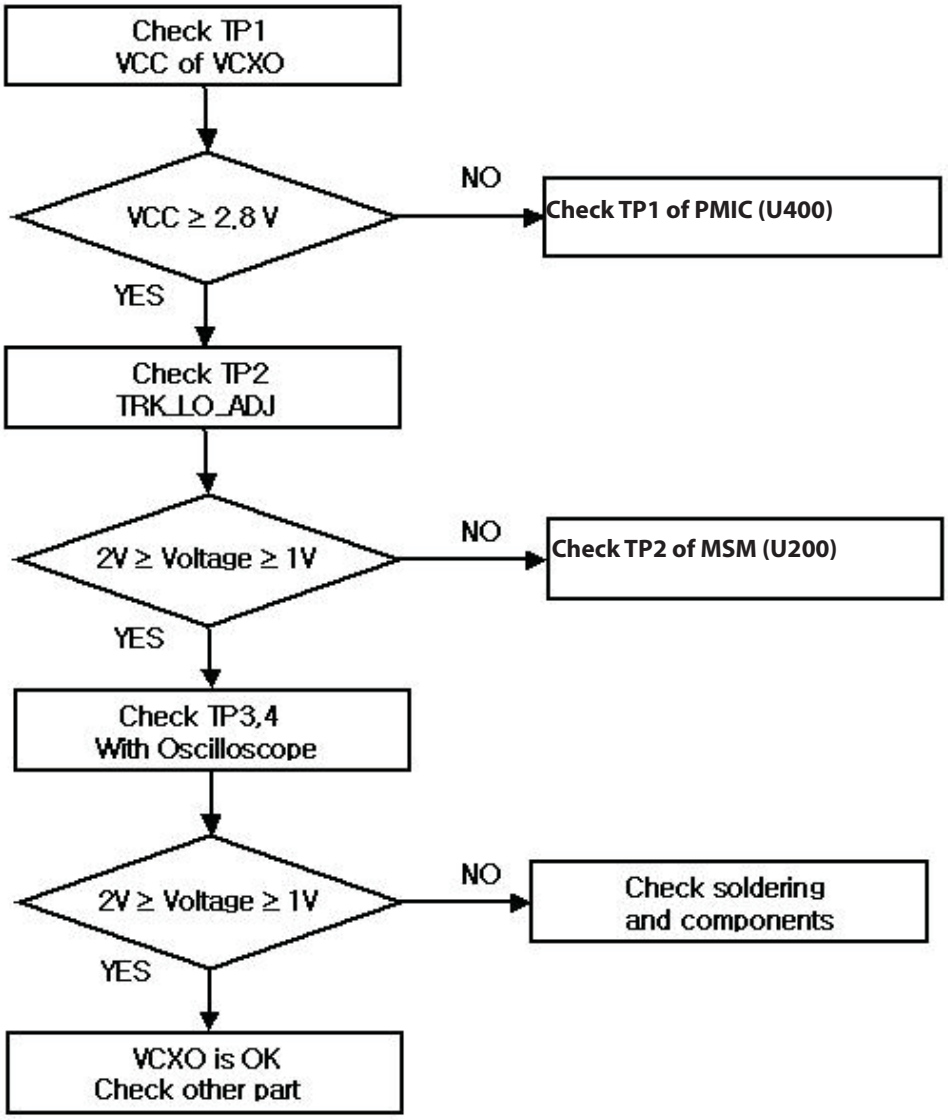

Copyright © 2009 LG Electronics. Inc. All right reserved.
Only for training and service purposes

4.2. Checking Ant. SW Module Block

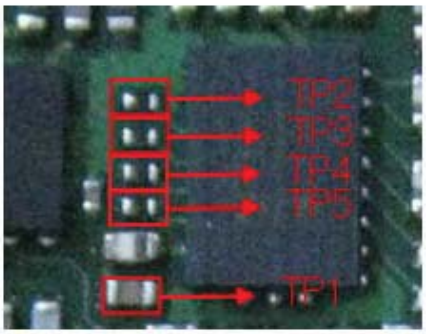

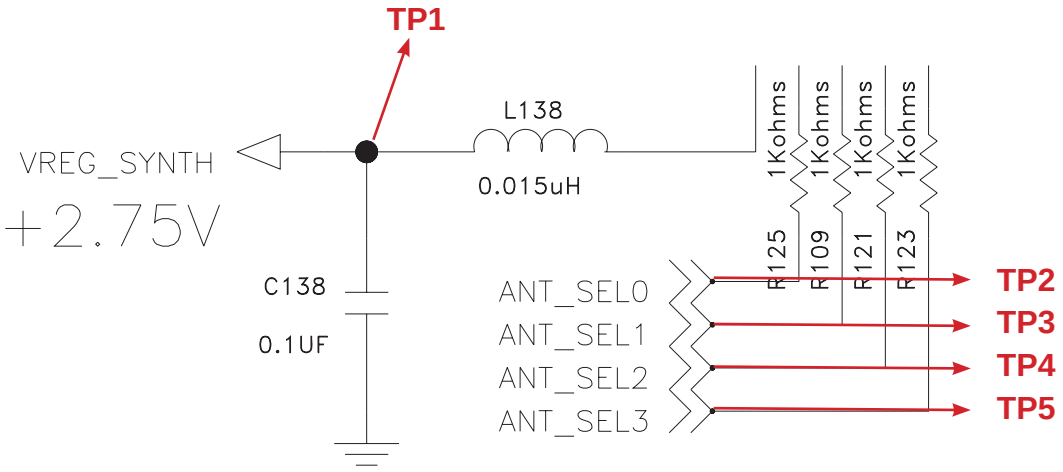

Copyright © 2009 LG Electronics. Inc. All right reserved.
Only for training and service purposes

LGE Internal Use Only

ANTENNA SWITCH MODULE LOGIC

	ANT_SEL0	ANT_SEL1	ANT_SEL2	ANT_SEL3
EGSM TX	HIGH	LOW	LOW	LOW
DCS/PCS TX	HIGH	HIGH	LOW	LOW
WB800	LOW	LOW	LOW	HIGH
WB 2100	LOW	HIGH	LOW	HIGH
EGSM RX	LOW	LOW	HIGH	LOW
DCS RX	LOW	LOW	LOW	LOW
PCS RX	LOW	HIGH	LOW	LOW

Logic Table of the Front End Module

Checking Switch Block power source

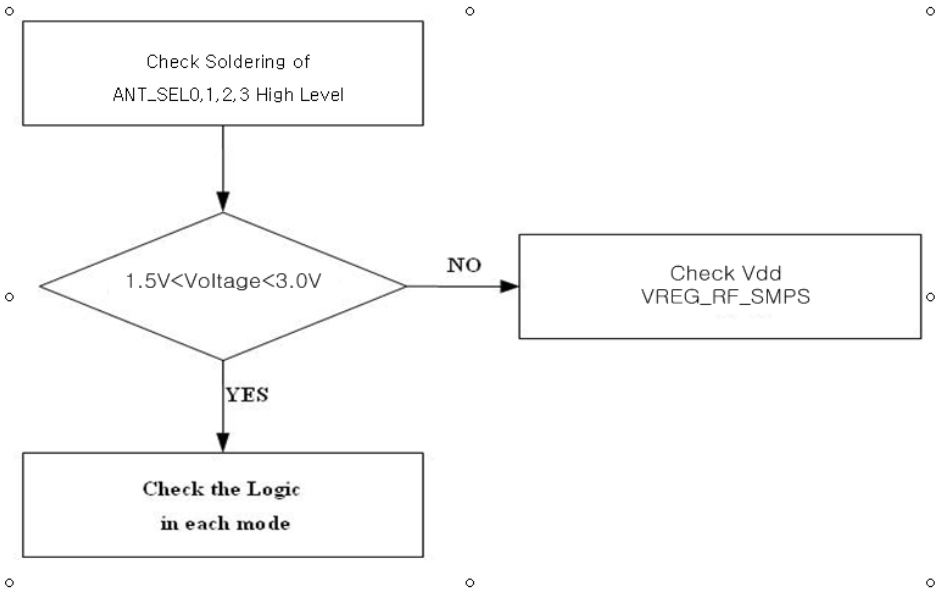

Copyright © 2009 LG Electronics. Inc. All right reserved.
Only for training and service purposes

4.3. Checking UMTS Block

4.3.1 Checking TX POWER of UMTS2100MHz

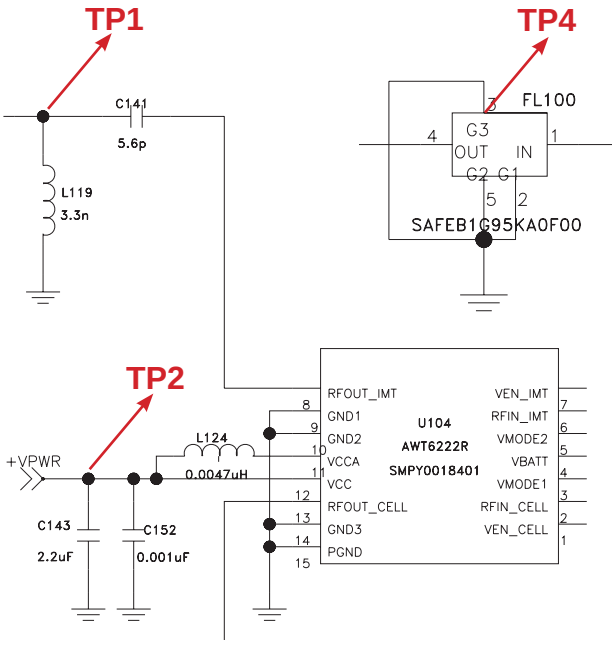

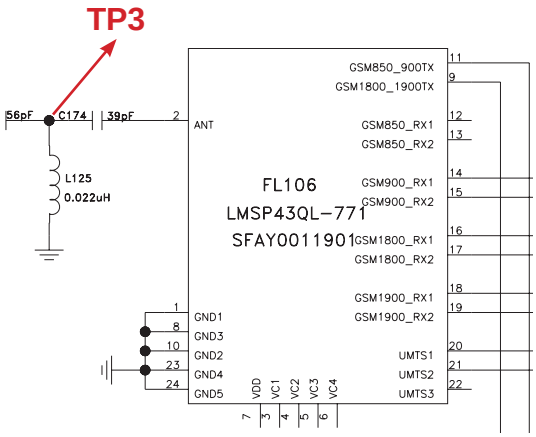

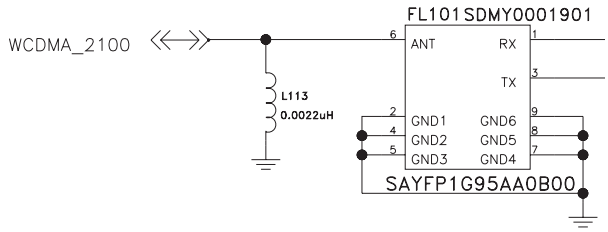

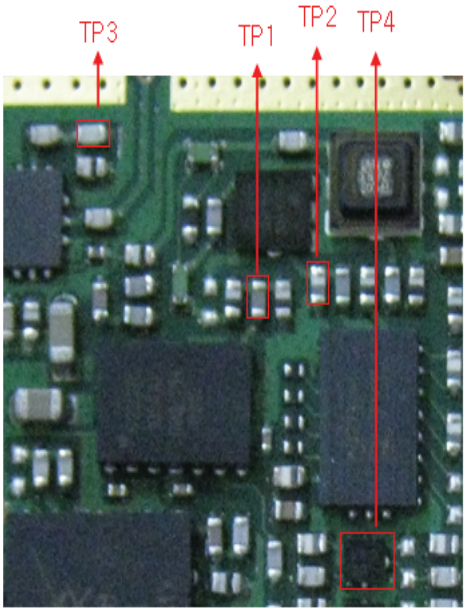

Copyright © 2009 LG Electronics. Inc. All right reserved.
Only for training and service purposes

LGE Internal Use Only

For testing, Max power of UMTS 2100MHz is needed.

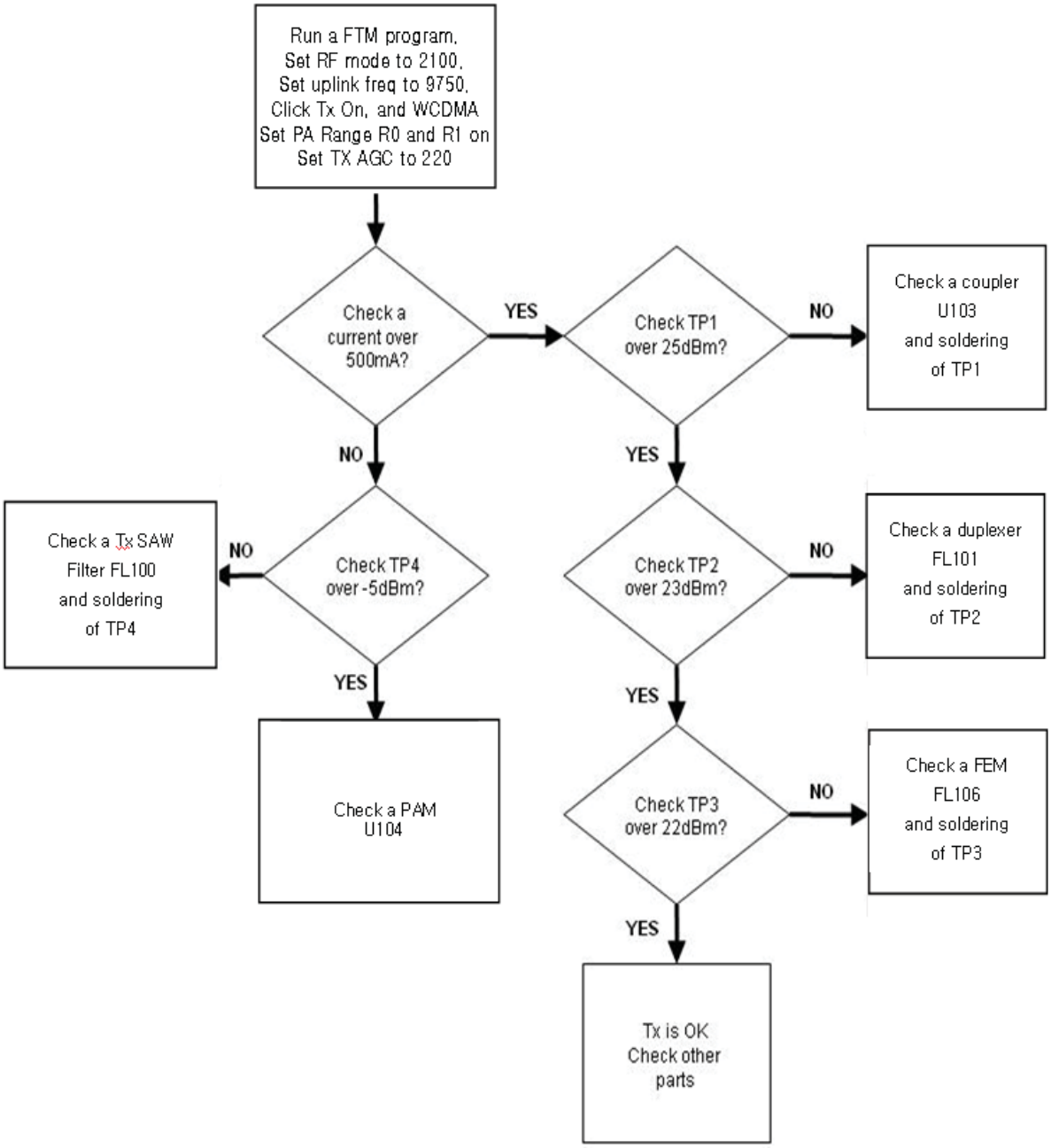

Copyright © 2009 LG Electronics. Inc. All right reserved.
Only for training and service purposes

Measured value and spectrum of TP1

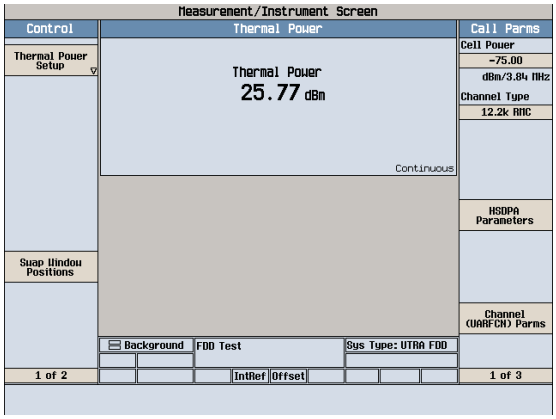

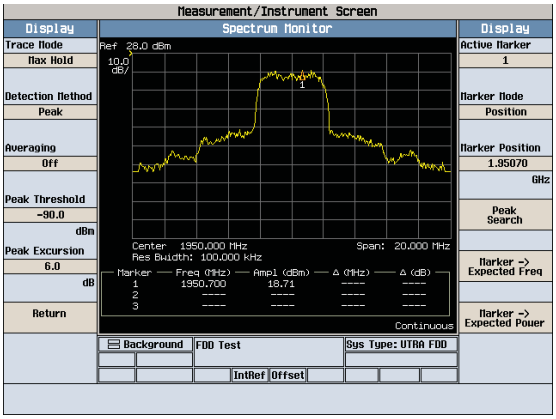

Measured value and spectrum of TP2

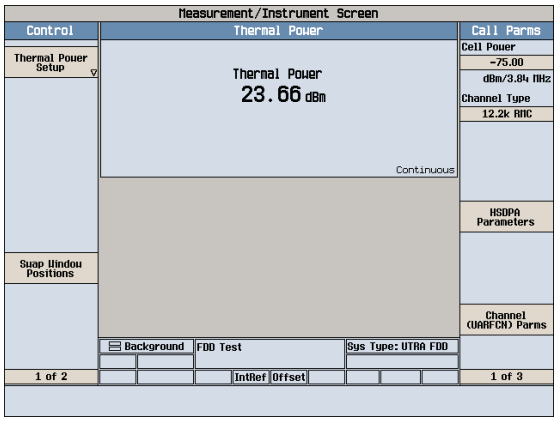

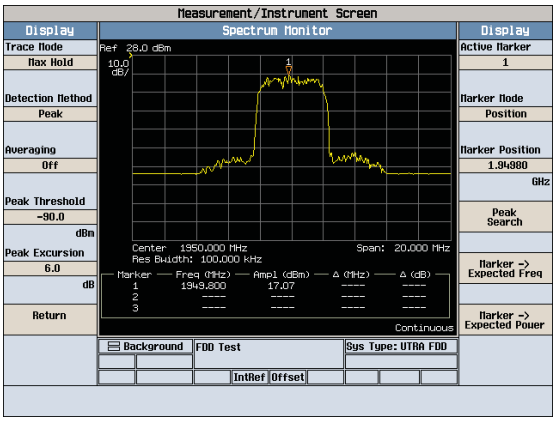

Measured value and spectrum of TP3

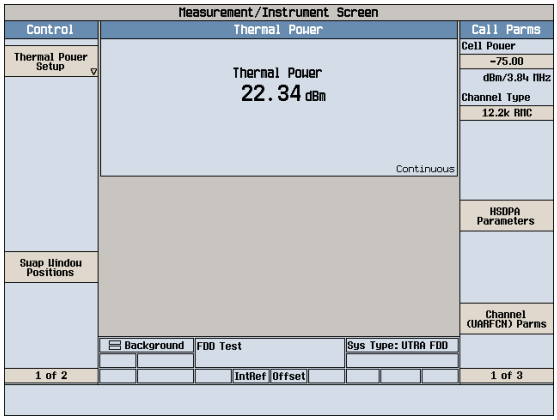

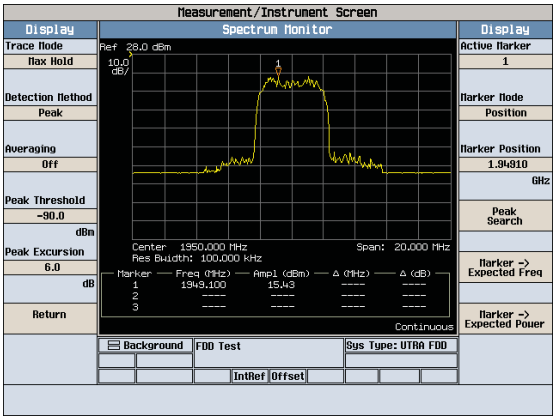

Copyright © 2009 LG Electronics. Inc. All right reserved.
Only for training and service purposes

LGE Internal Use Only

4.3.2 Checking TX POWER of UMTS 800MHz

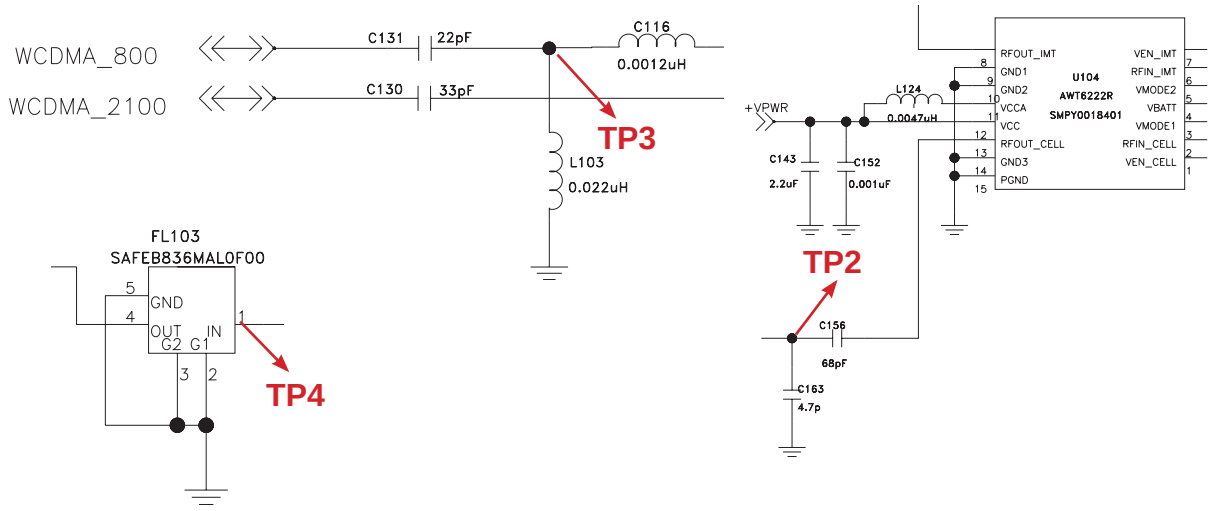

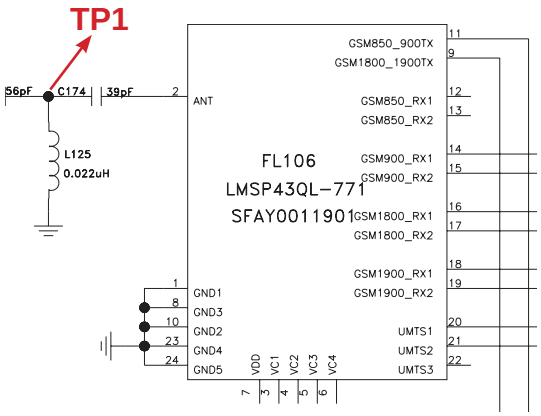

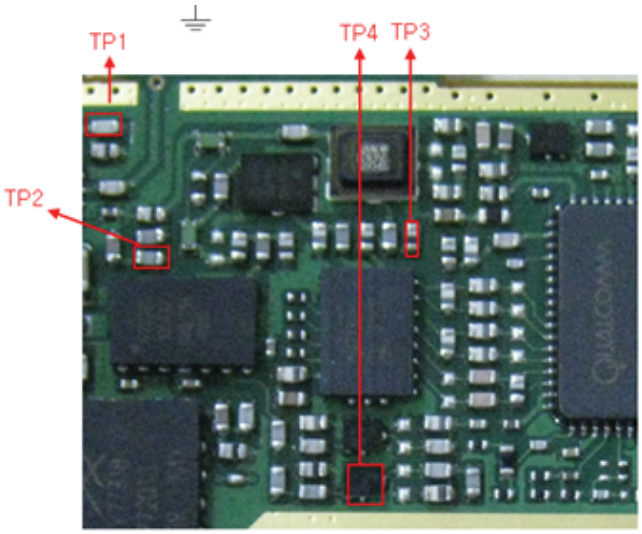

Copyright © 2009 LG Electronics. Inc. All right reserved.
Only for training and service purposes

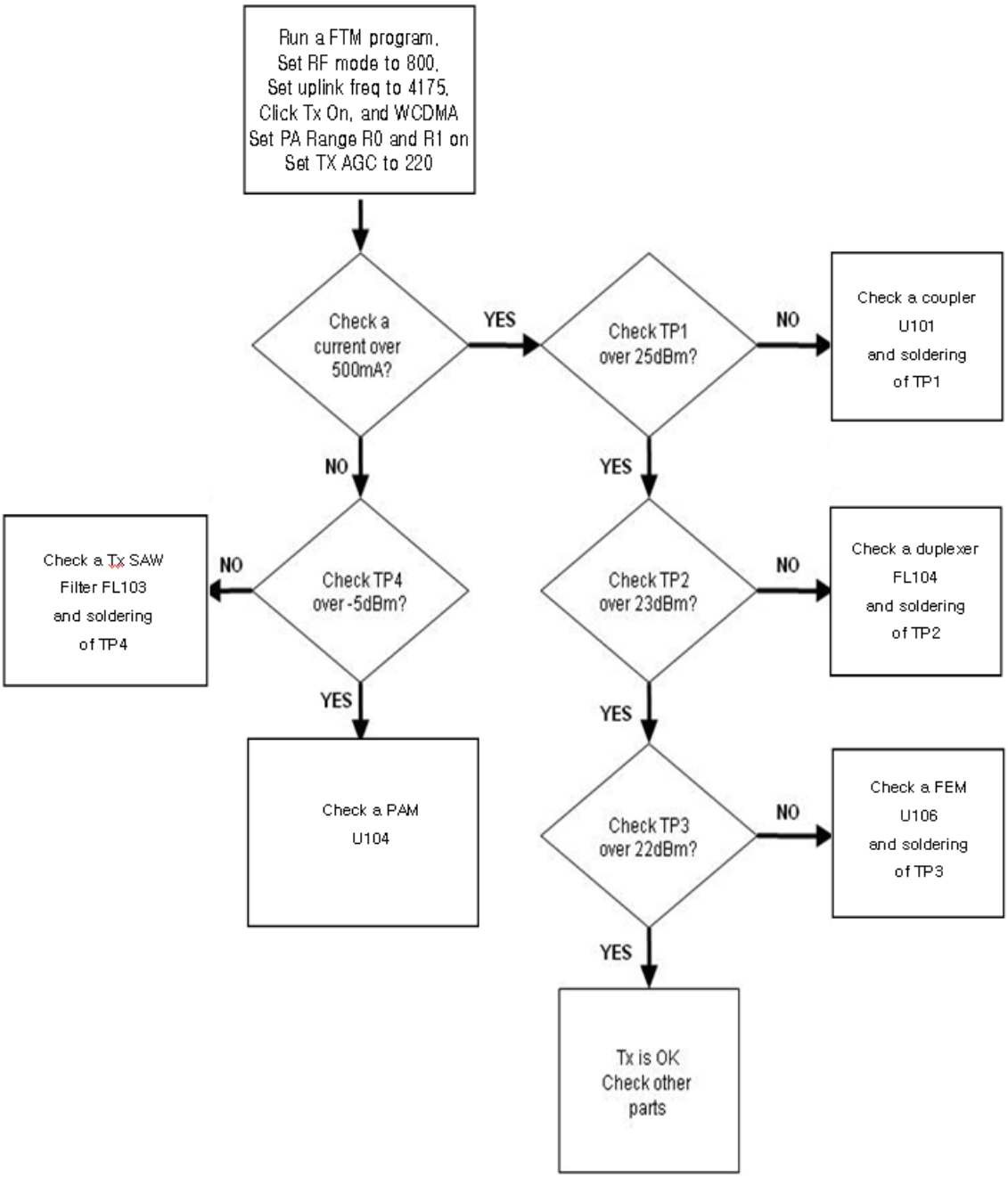

Copyright © 2009 LG Electronics. Inc. All right reserved.
Only for training and service purposes

LGE Internal Use Only

Measured value and spectrum of TP1

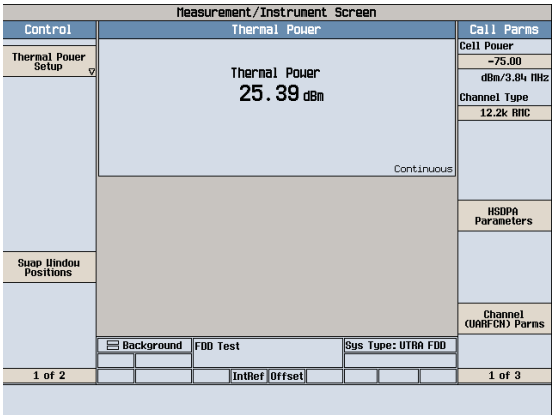

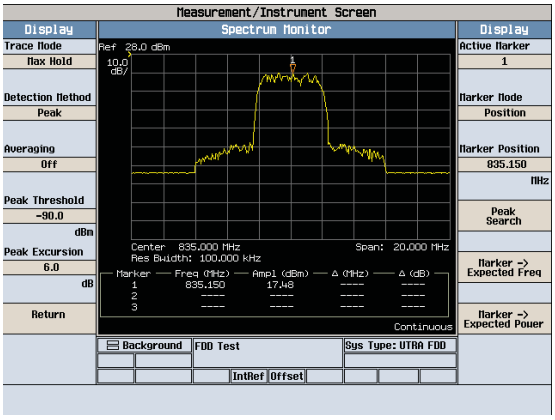

Measured value and spectrum of TP2

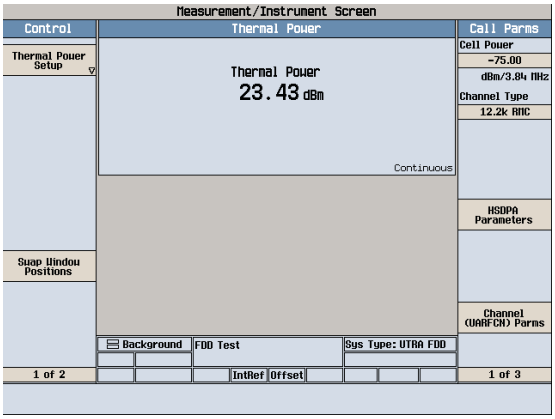

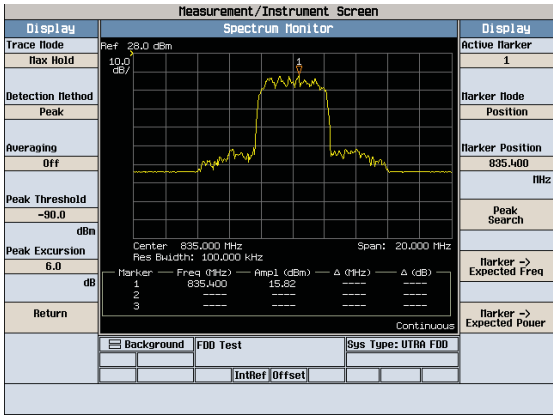

Measured value and spectrum of TP3

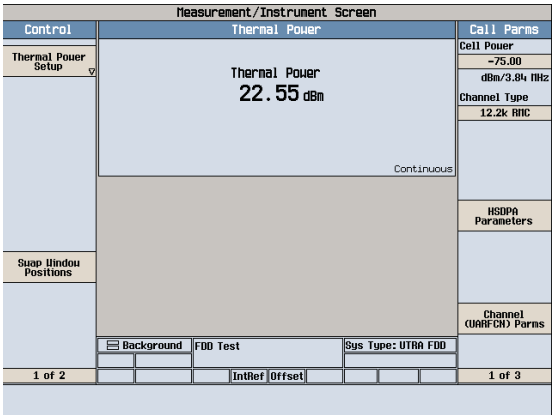

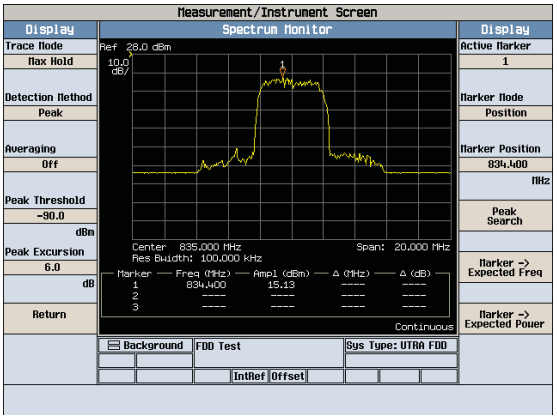

Copyright © 2009 LG Electronics. Inc. All right reserved.
Only for training and service purposes

4.3.3 Checking UMTS PAM Control Block

- PAM control signal

TP1, 1* : PA_ON0, PA_ON1 : UMTS2100, UMTS800 PAM enable (about 2.6V)

TP2 : +VPWR : UMTS2100, UMTS800 PAM Main Voltage (3V < +VPWR < 4.2V)

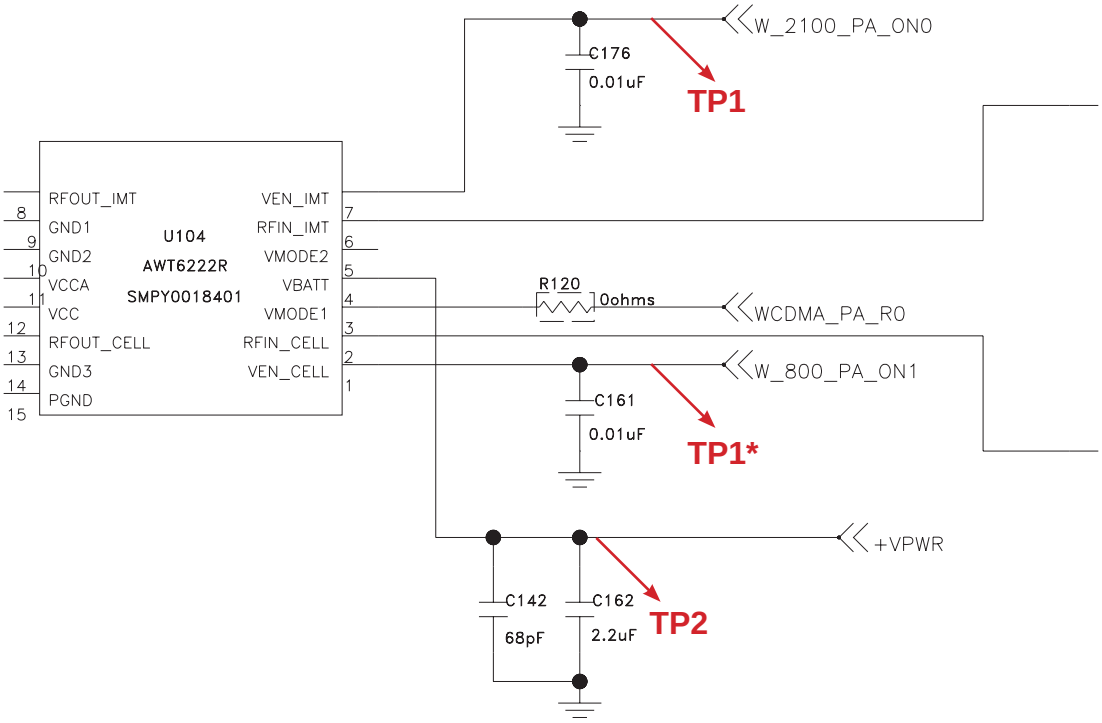

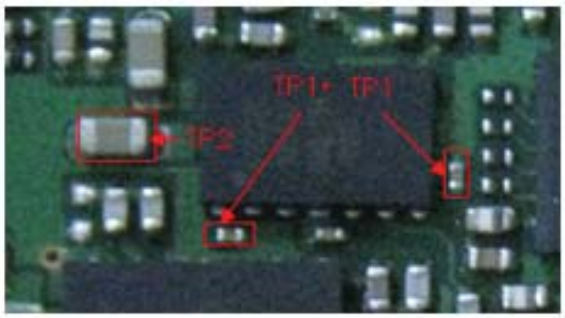

Copyright © 2009 LG Electronics. Inc. All right reserved.
Only for training and service purposes

LGE Internal Use Only

4.3.4 Checking RF Rx Level of UMTS 2100/800MHz

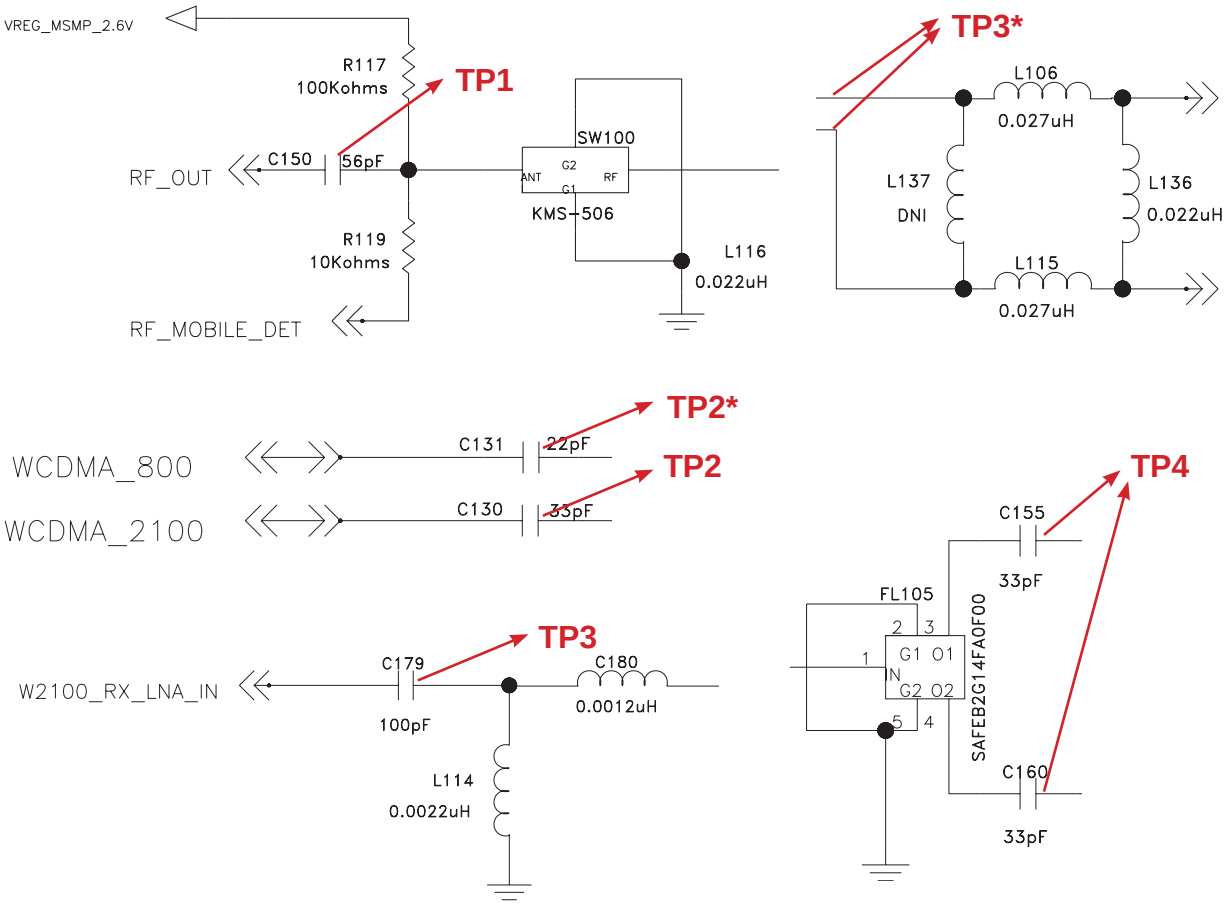

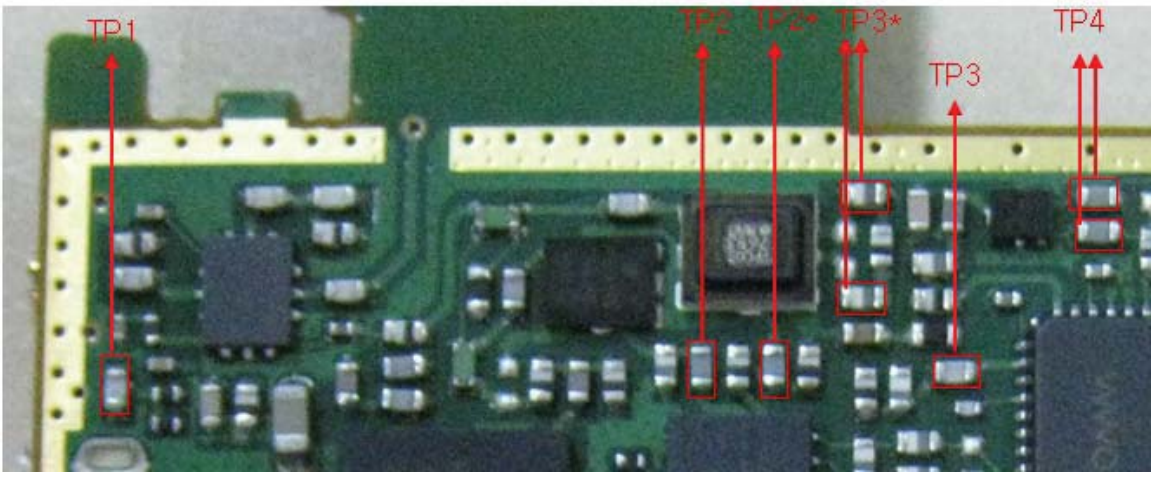

Copyright © 2009 LG Electronics. Inc. All right reserved.
Only for training and service purposes

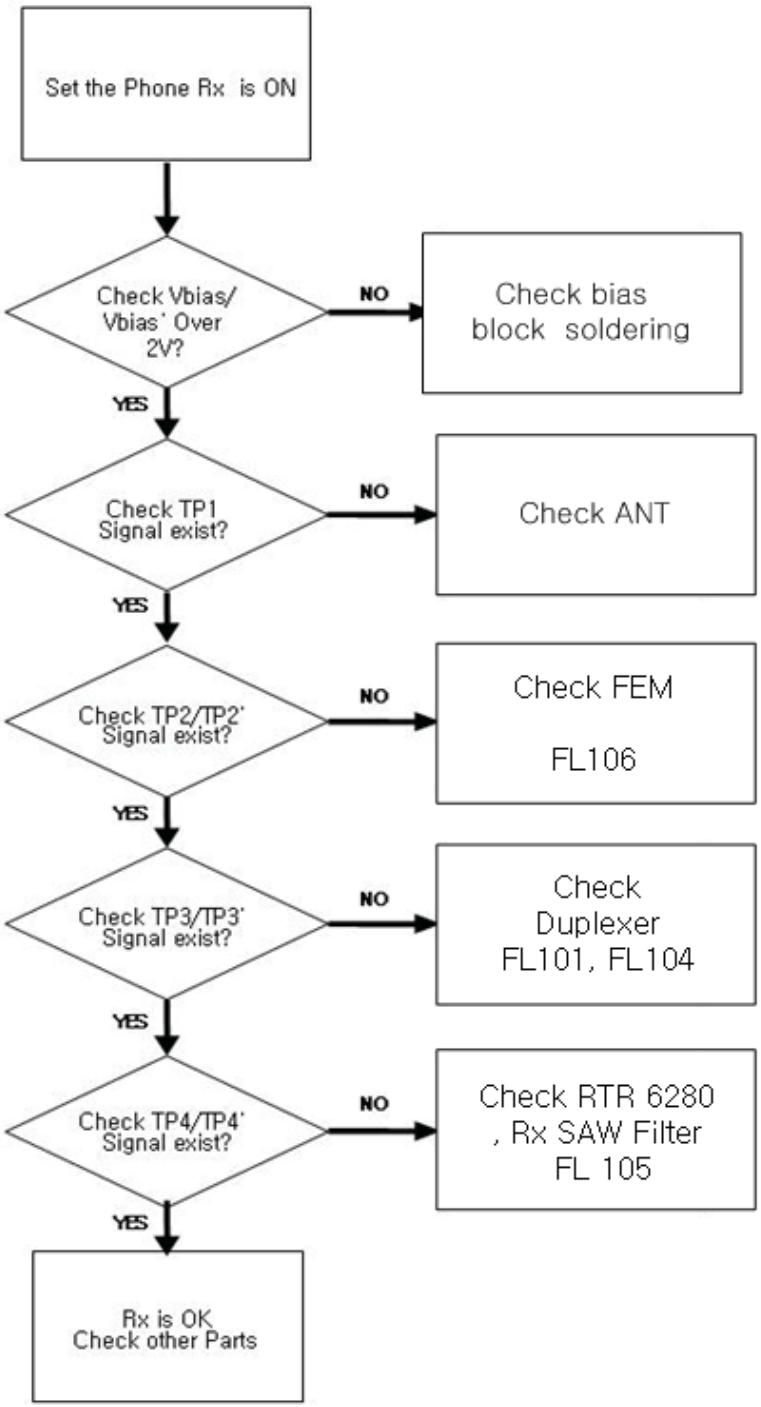

※ TP* : UMTS 800 Rx PATH

TP : UMTS 2100 Rx PATH

Copyright © 2009 LG Electronics. Inc. All right reserved.
Only for training and service purposes

LGE Internal Use Only

4.4. Checking GSM Block

4.4.1 Checking GSM PAM Block

TP1. GSM_PA_RAMP : Power Amp Gain Control. typically, 0.2V < Vramp < 1.6V

TP2. +VPWR : PAM Supply Voltage Vcc higher than 3.0V

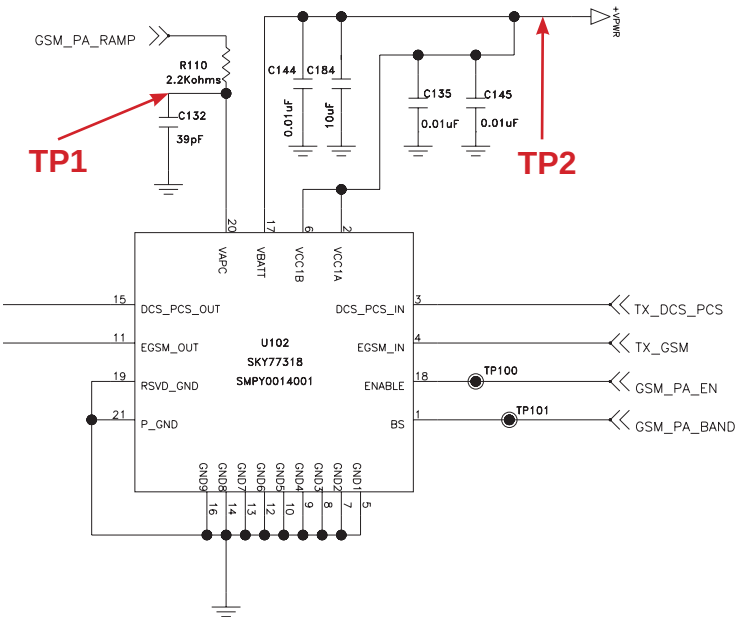

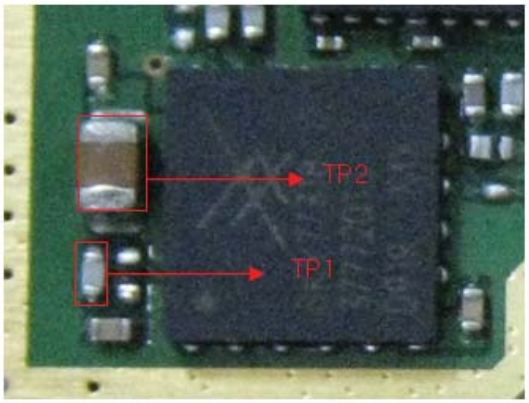

Copyright © 2009 LG Electronics. Inc. All right reserved.
Only for training and service purposes

4.4.2 Checking RF Rx Block of GSM Bands

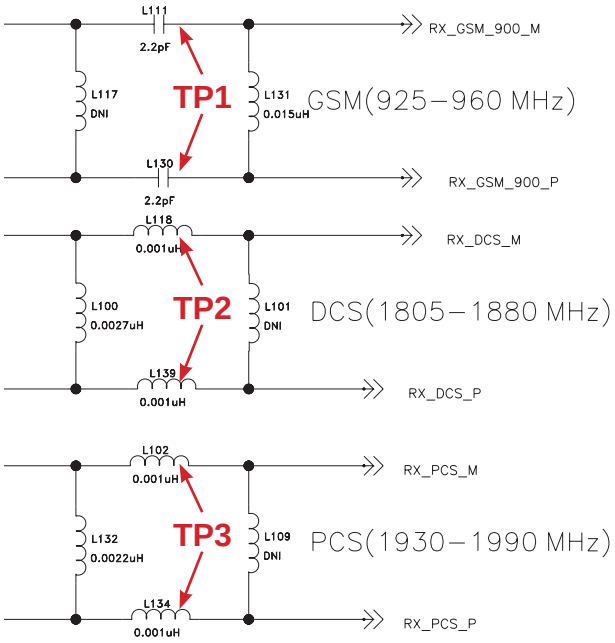

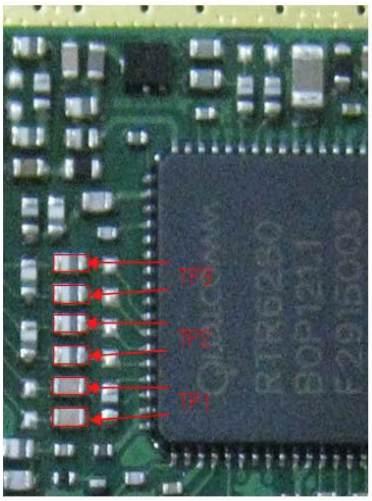

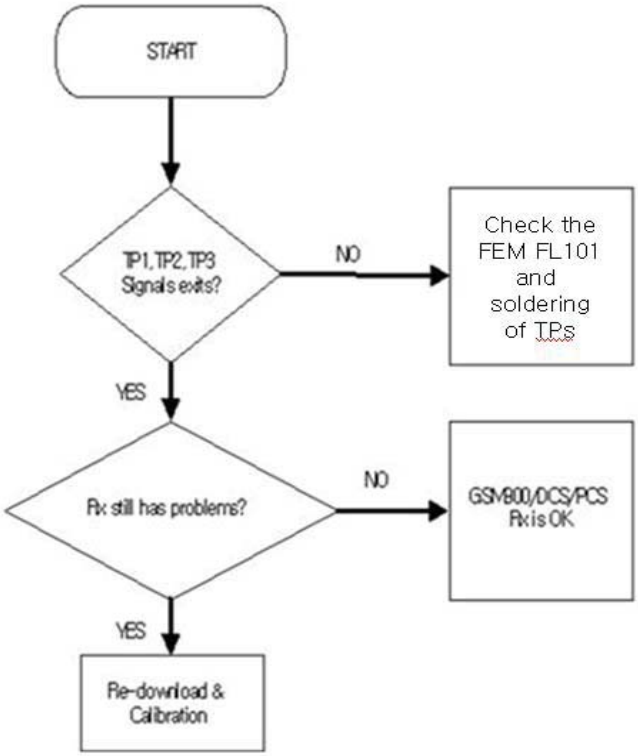

Copyright © 2009 LG Electronics. Inc. All right reserved.
Only for training and service purposes

LGE Internal Use Only

*** WCDMA FTM control order using QPST

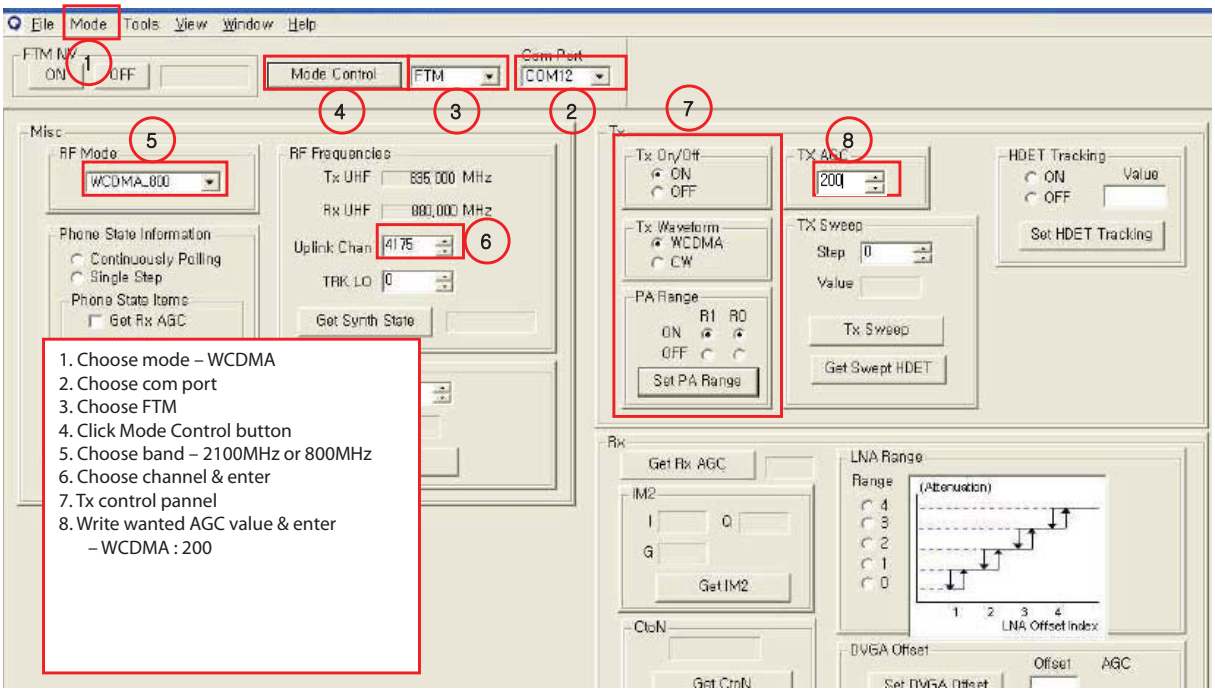

Copyright © 2009 LG Electronics. Inc. All right reserved.
Only for training and service purposes

*** GSM FTM control order using QPST

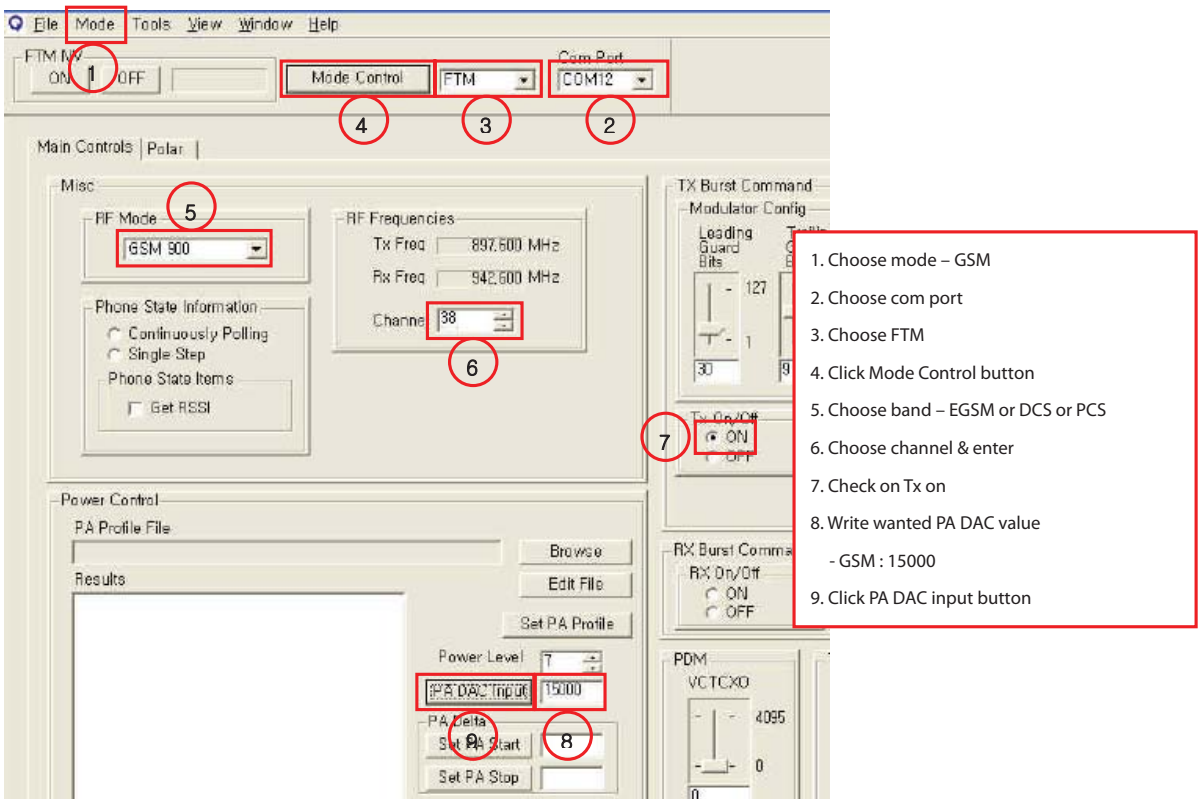

1. Choose mode – GSM
2. Choose com port
3. Choose FTM
4. Click Mode Control button
5. Choose band – EGSM or DCS or PCS
6. Choose channel & enter
7. Check on Tx on
8. Write wanted PA DAC value
   - GSM : 15000
9. Click PA DAC input button

Copyright © 2009 LG Electronics. Inc. All right reserved.
Only for training and service purposes

LGE Internal Use Only

4.5 Power ON Troubleshooting

Power On sequence of L-06A is :
PWR key press (Navi key PCB) → KEY_ON_SW_N go to low(R516),PM7540 KPD_PWR_N pin(C12) → PM7540 Power Up → VREG_MSMC1_1.2V(C443), VREG_MSMC2_1.2V(C437) VREG_MSME_1.8V(C438), VREG_MSMP_2.6V(C409), VREG_MSMA_2.6V(C448), VREG_TCXO_2.85V(C442) power up and system reset assert to MSM → Phone booting and PS_HOLD(R413) assert to PMIC.

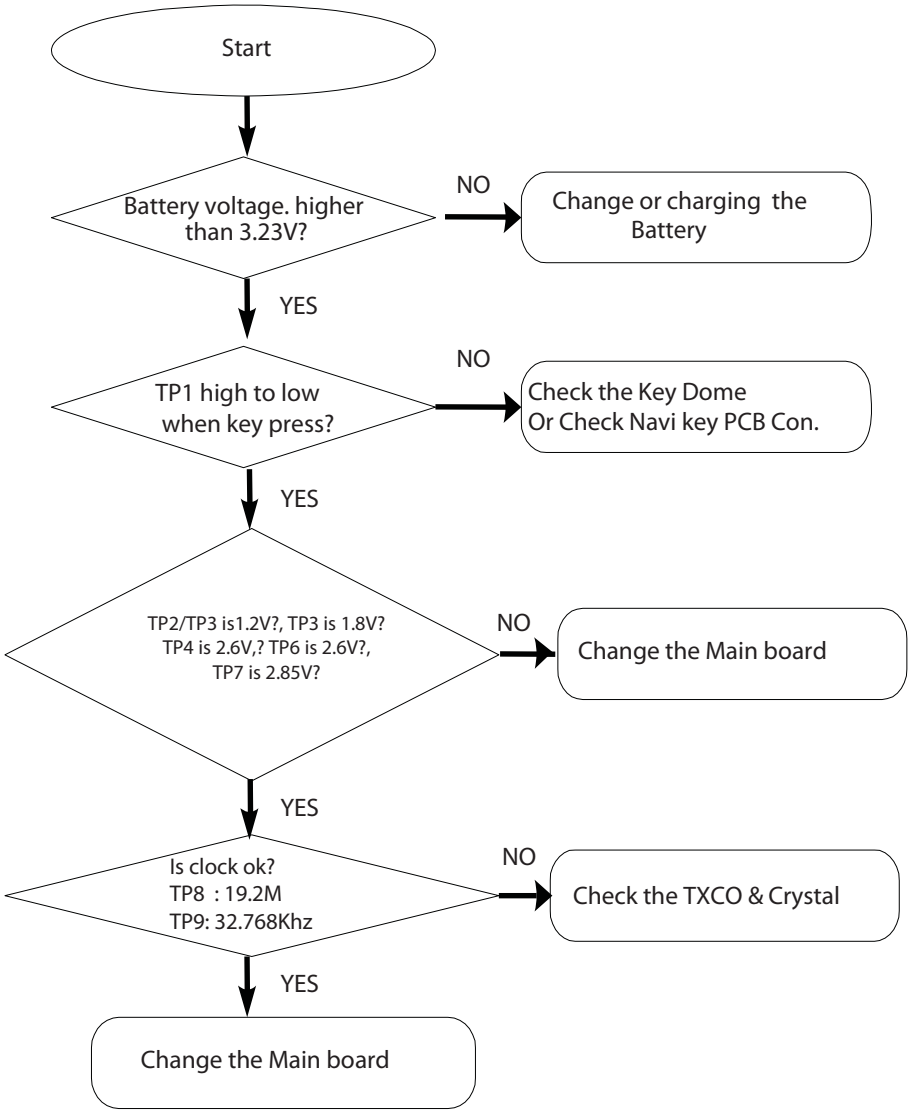

Copyright © 2009 LG Electronics. Inc. All right reserved.
Only for training and service purposes

< KEY Top >

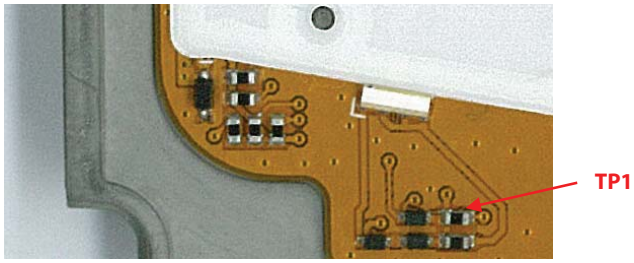

< Main Top >

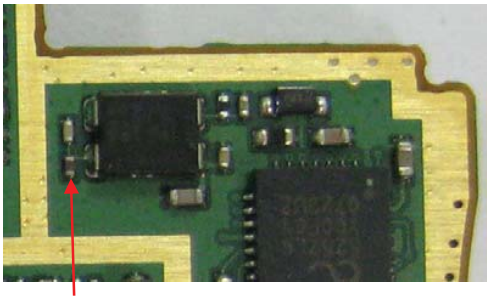

< Main Bottom >

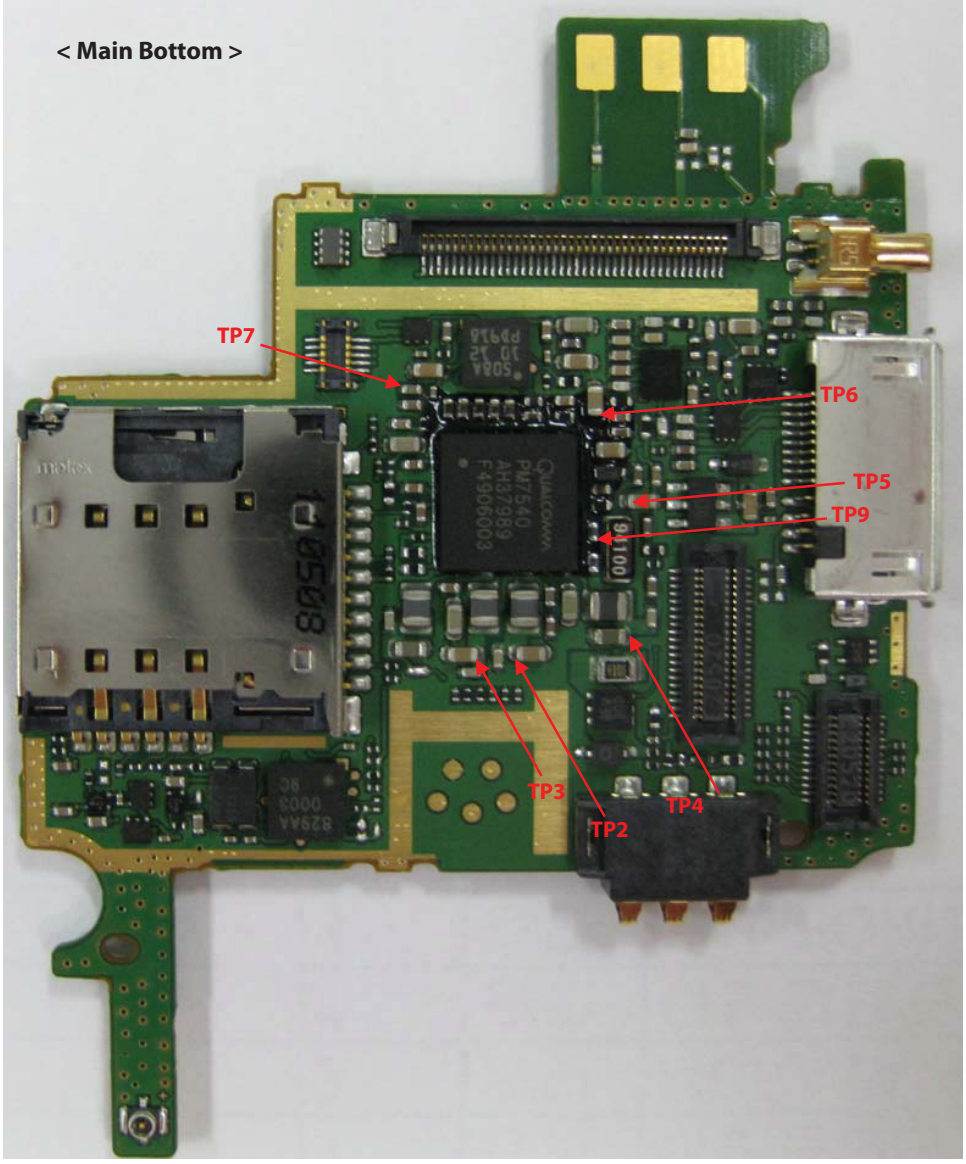

Copyright © 2009 LG Electronics. Inc. All right reserved.
Only for training and service purposes

LGE Internal Use Only

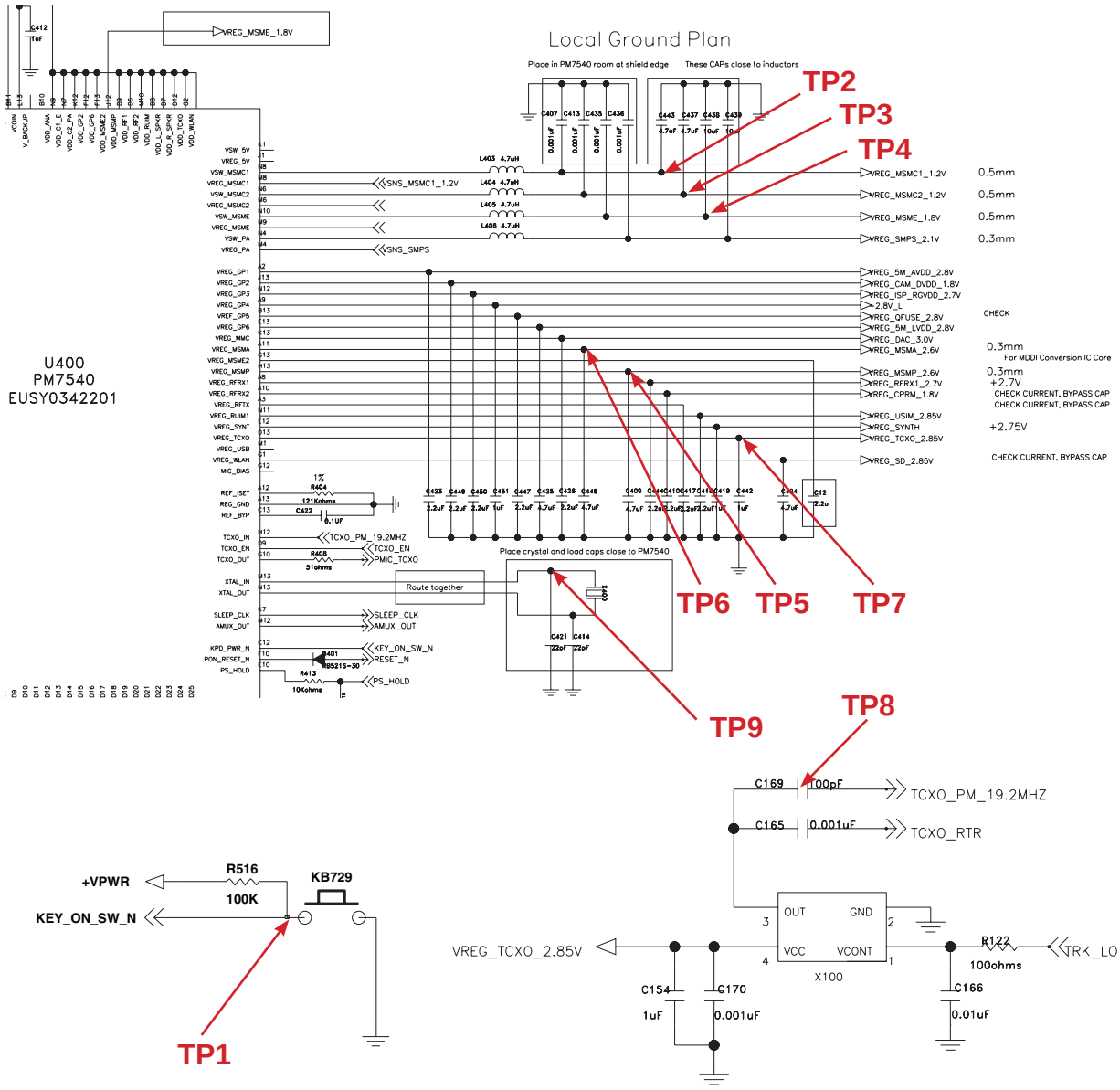

Copyright © 2009 LG Electronics. Inc. All right reserved.
Only for training and service purposes

4.6 Charger Troubleshooting

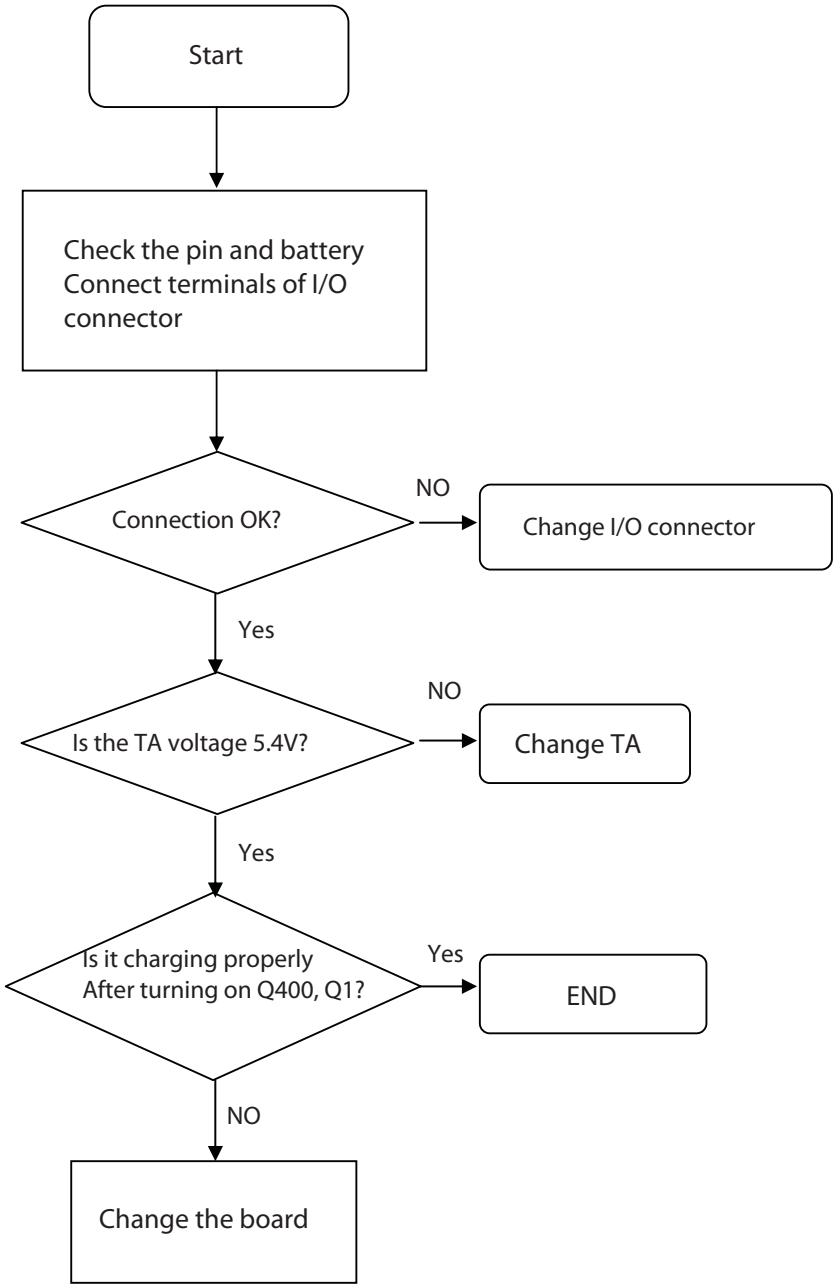

Copyright © 2009 LG Electronics. Inc. All right reserved.
Only for training and service purposes

LGE Internal Use Only

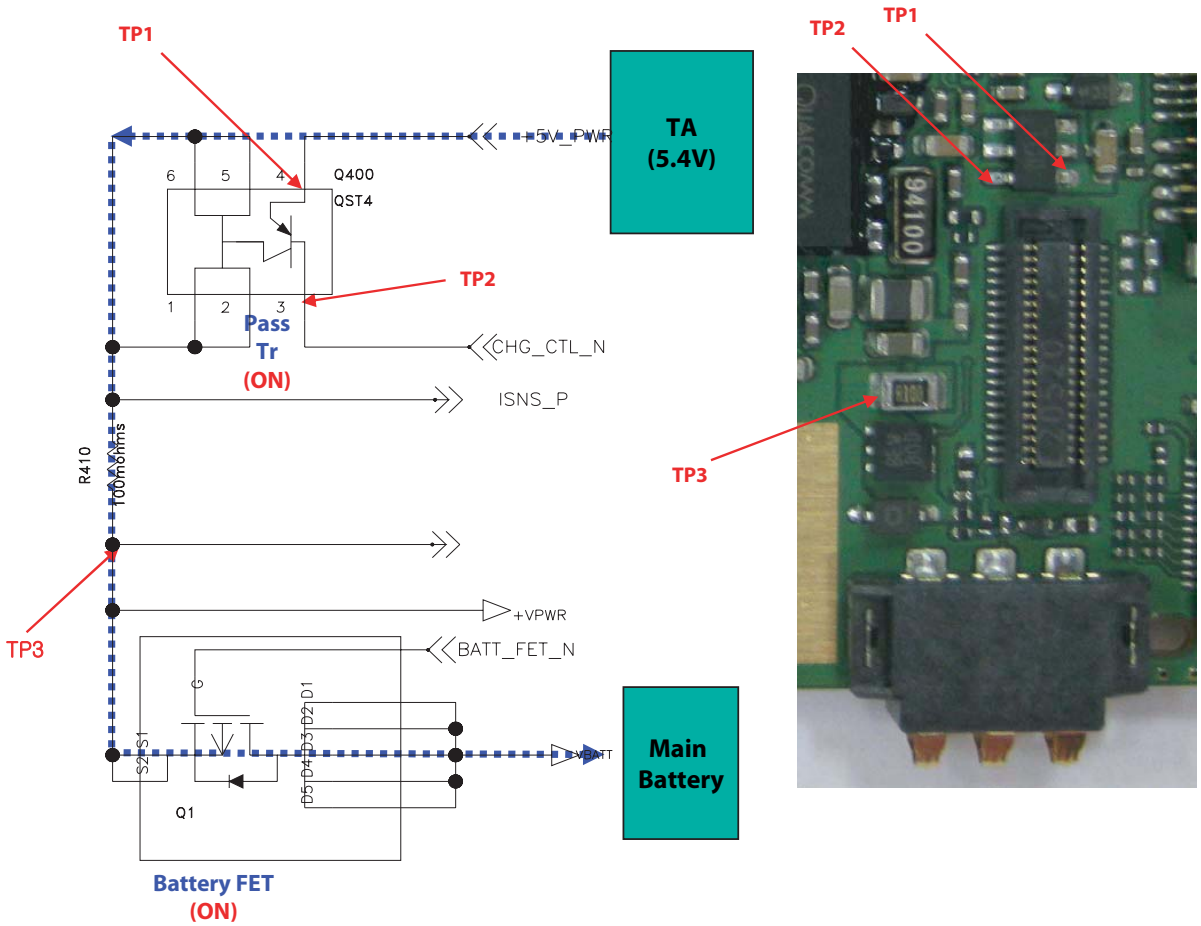

Charging Procedure
- Connect TA
- Control the charging current by PM7540 IC
- Charging current flows into the battery

Check Point
- Connection of TA
- Charging current path
- Battery

Troubleshooting Setup
- Connect TA and battery to the phone

Troubleshooting Procedure
- Check the charger connector:TP1
- Check the Current path :TP2 / TP3
- Check the battery

Copyright © 2009 LG Electronics. Inc. All right reserved.
Only for training and service purposes

4.7 USB Troubleshooting

USB Initial sequence of L-06A is :
USB connected to L-06A power on → USB_VBUS_IN(Q402 PIN4) go to 5V → USBHS_CLK and USBHS_D[0] is triggered → PMIC_1.8V_TCXO is triggered -> HP_R_USB+/- is triggered-> USB work.

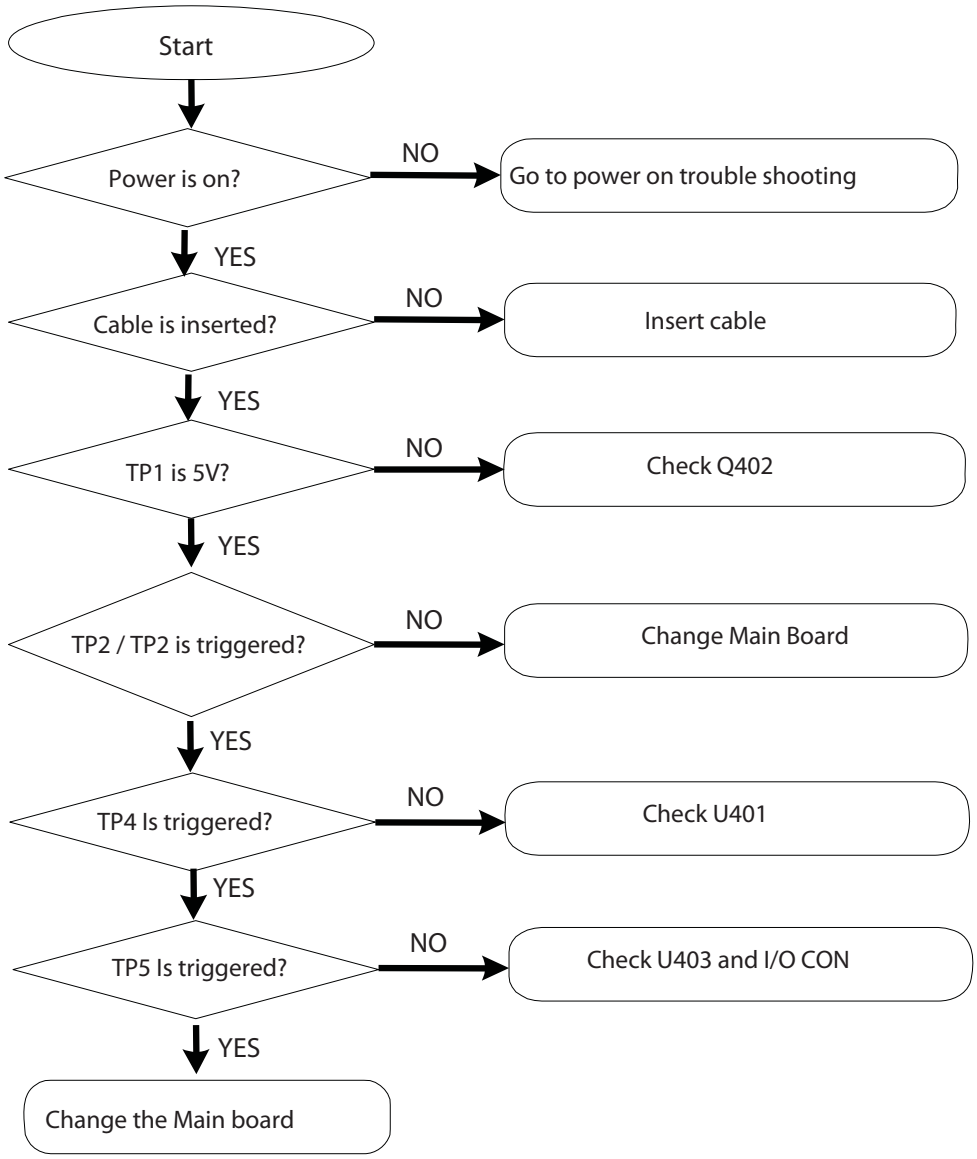

Copyright © 2009 LG Electronics. Inc. All right reserved.
Only for training and service purposes

LGE Internal Use Only

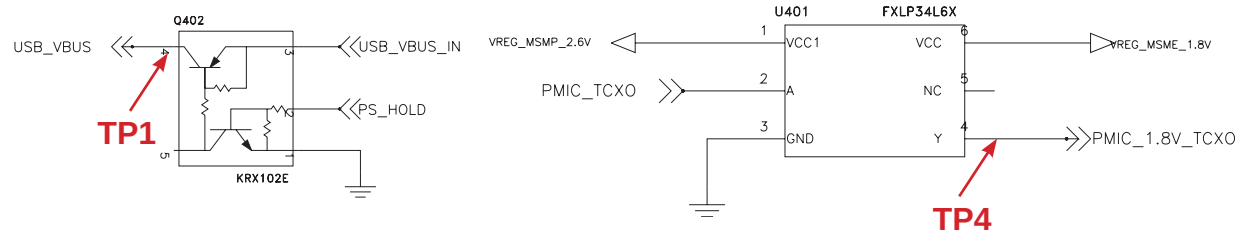

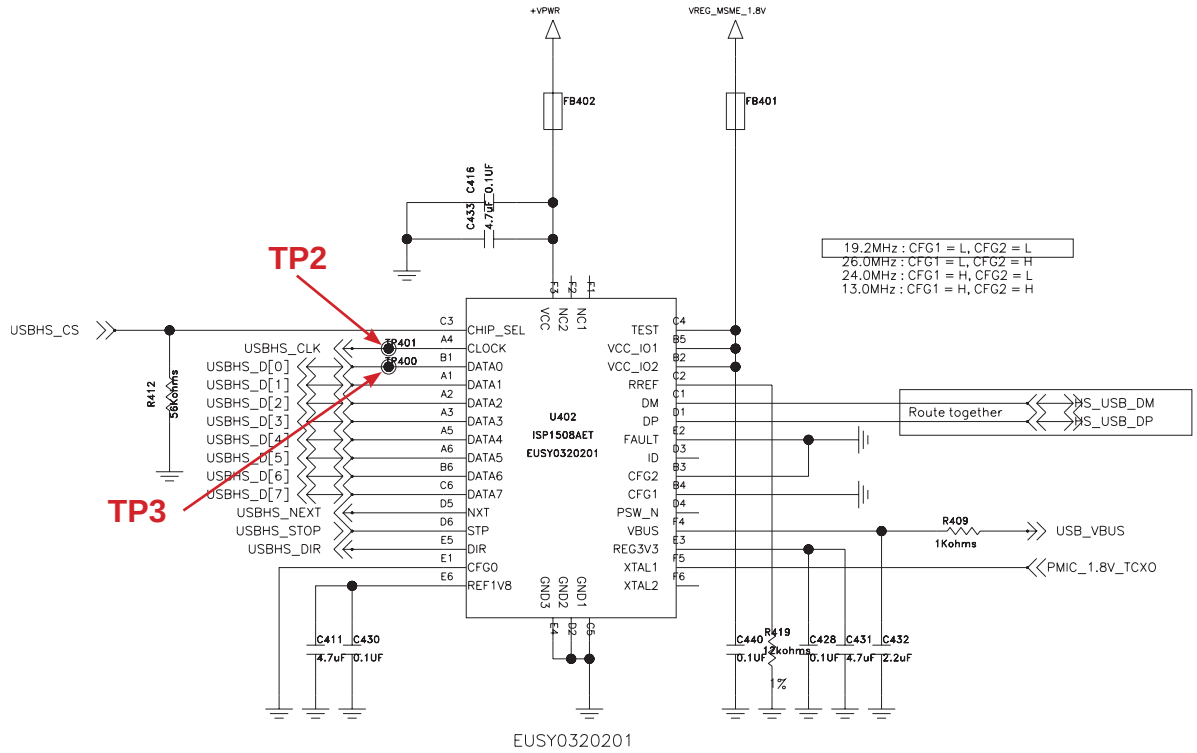

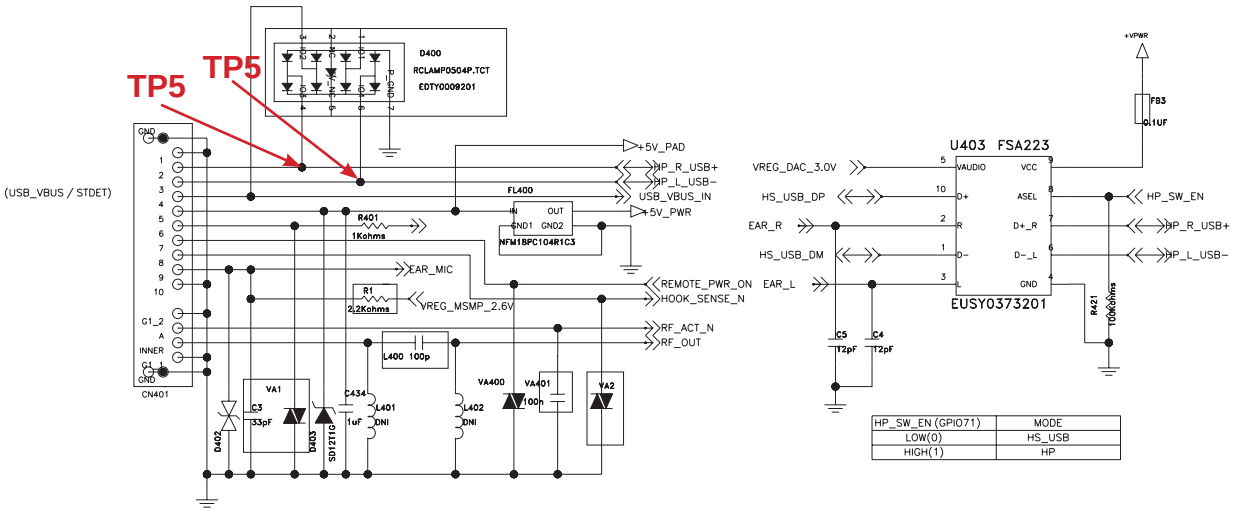

Copyright © 2009 LG Electronics. Inc. All right reserved.
Only for training and service purposes

< Main Bottom >

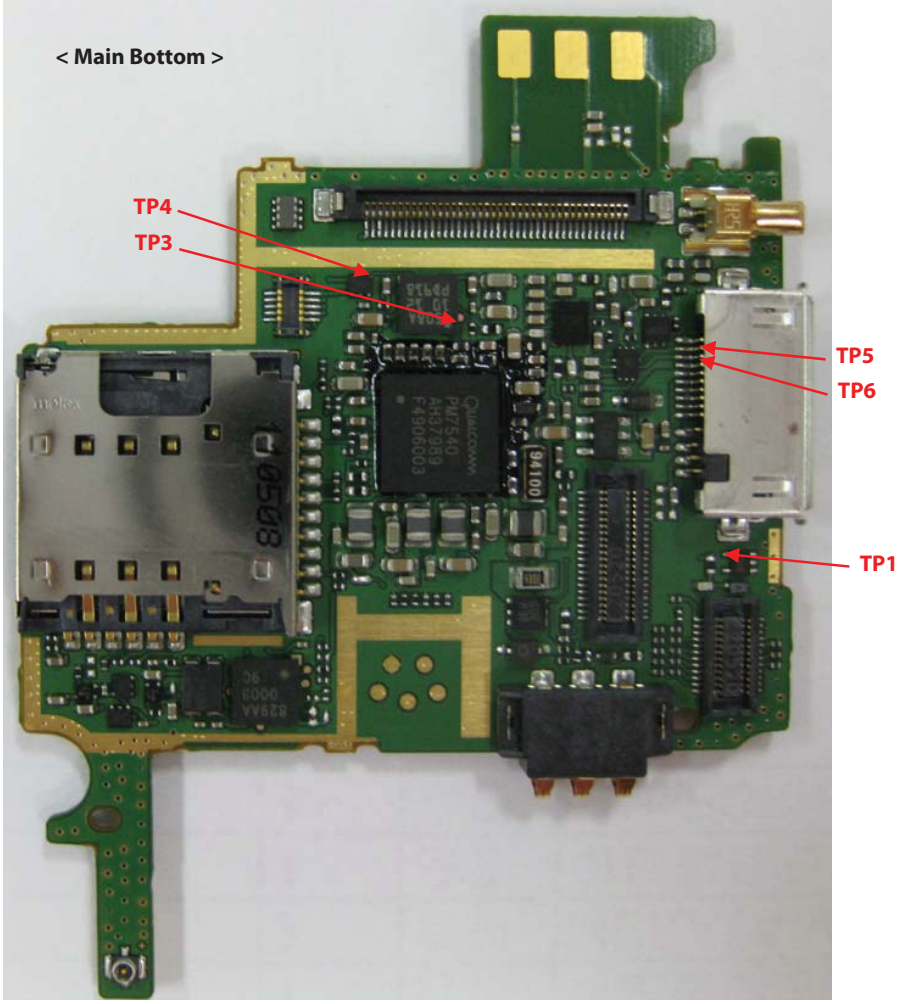

< Main Top >

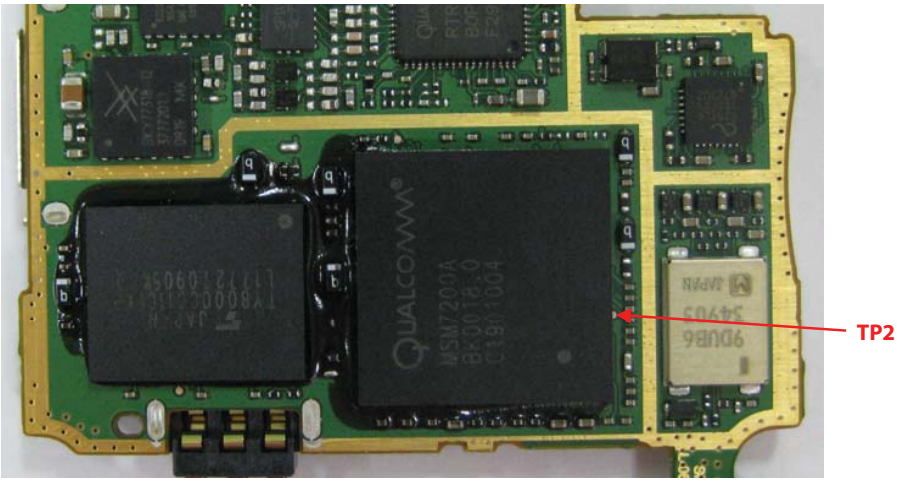

Copyright © 2009 LG Electronics. Inc. All right reserved.
Only for training and service purposes

LGE Internal Use Only

4.8 SIM Detect Troubleshooting

USIM Initial sequence of L-06A is :
USIM_CLK,USIM_RST,USIM_DATA triggered → VREG_USIM_2.85V go to 2.85V → USIM IF work

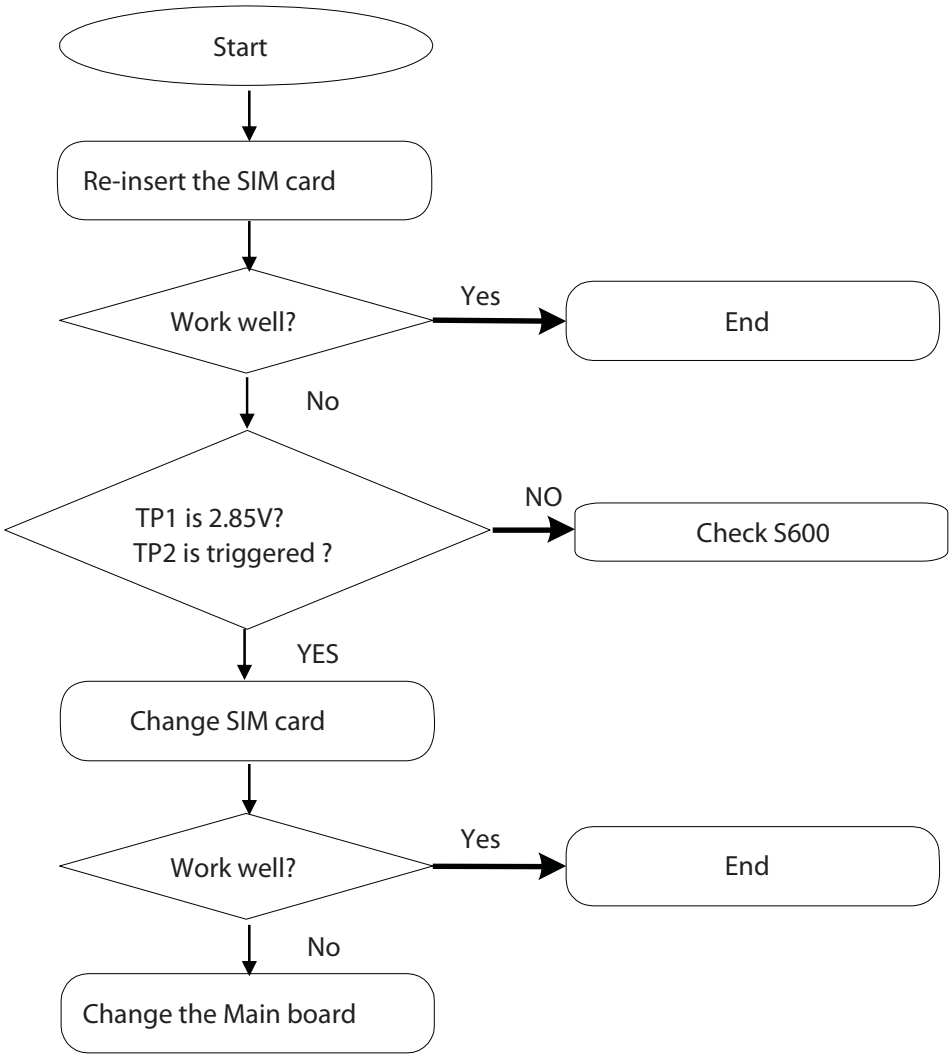

Copyright © 2009 LG Electronics. Inc. All right reserved.
Only for training and service purposes

COMBO Connector (Micro SD + SIM)

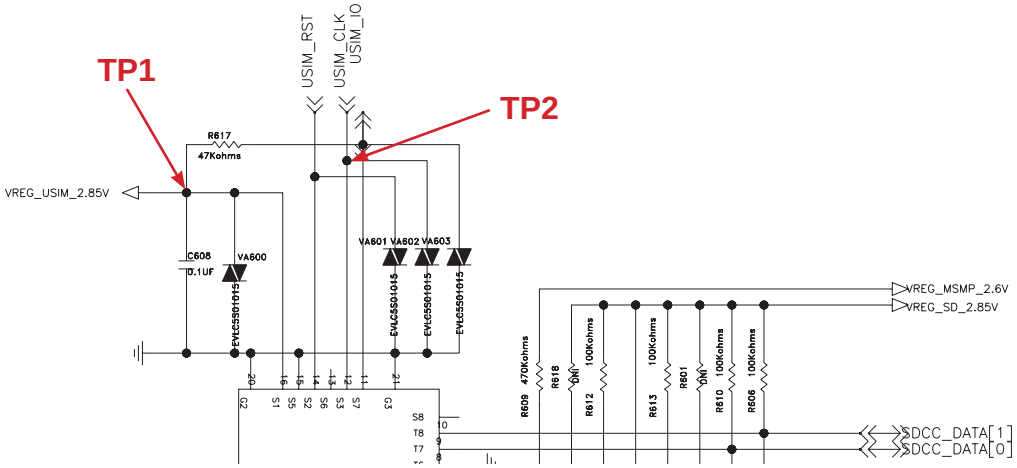

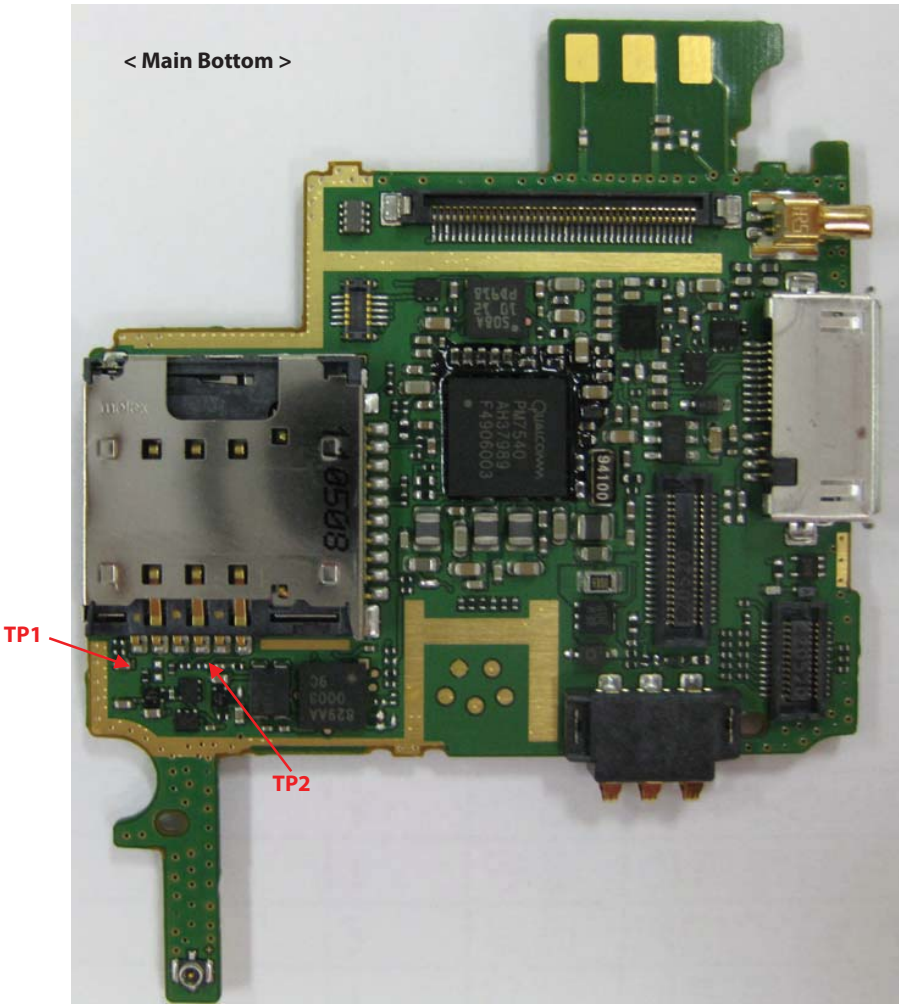

Copyright © 2009 LG Electronics. Inc. All right reserved.
Only for training and service purposes

LGE Internal Use Only

4.8.1 VGA Camera Troubleshooting

VGA Camera control signals are generated by MSM7200A.

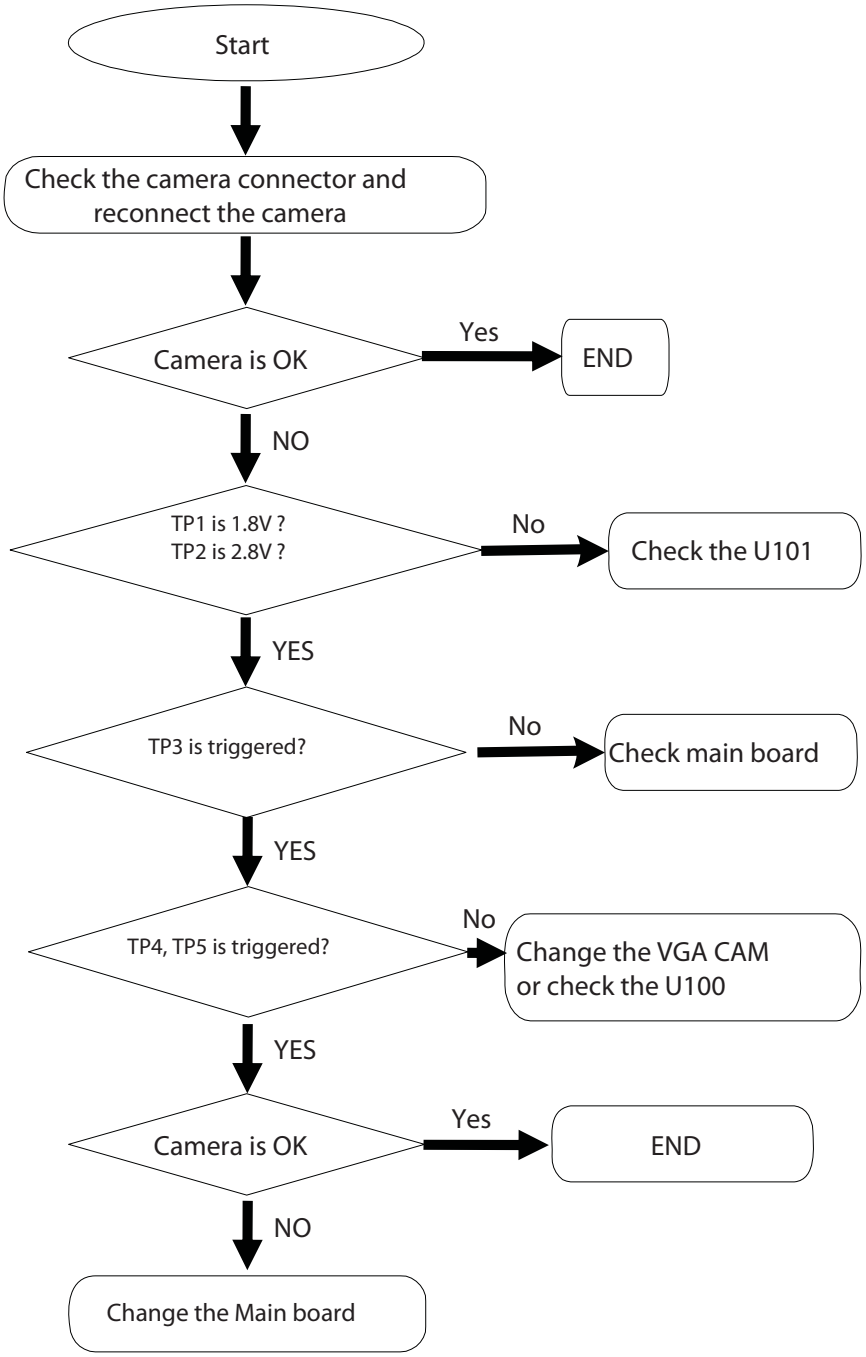

Copyright © 2009 LG Electronics. Inc. All right reserved.
Only for training and service purposes

VGA Socket

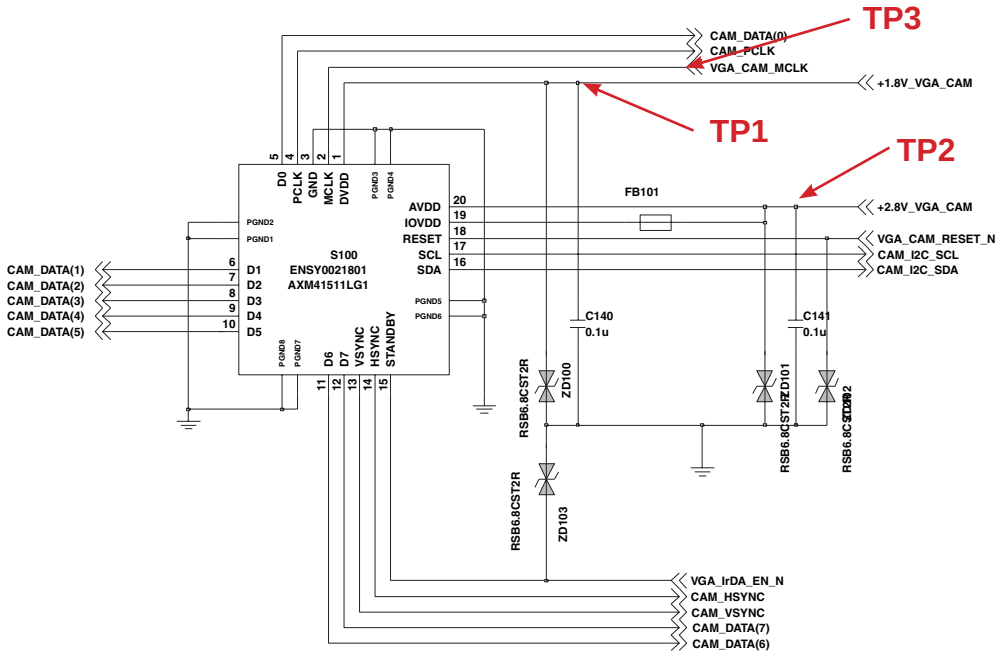

Camera Serial/Deserial

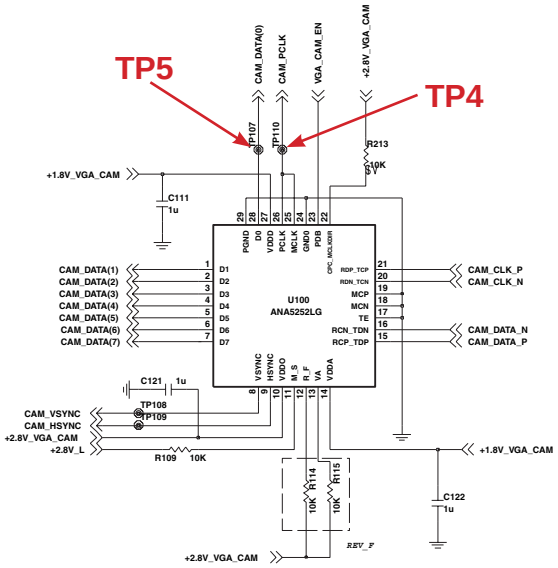

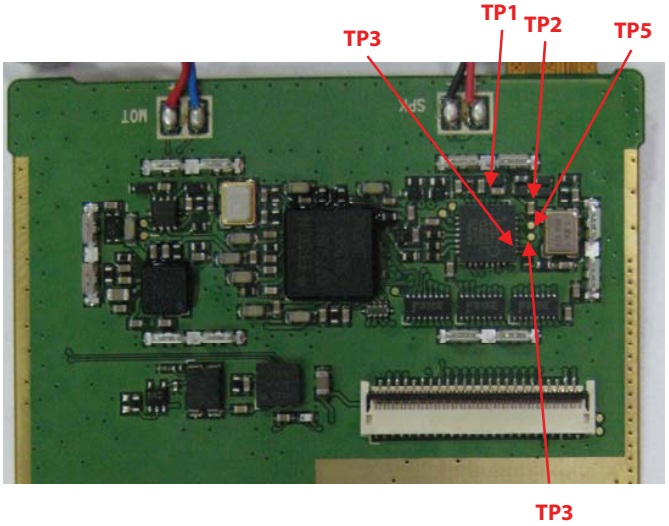

Copyright © 2009 LG Electronics. Inc. All right reserved.
Only for training and service purposes

LGE Internal Use Only

4.8.2 5 Mega Camera Troubleshooting

5 Mega Camera control signals are generated by MV9319.

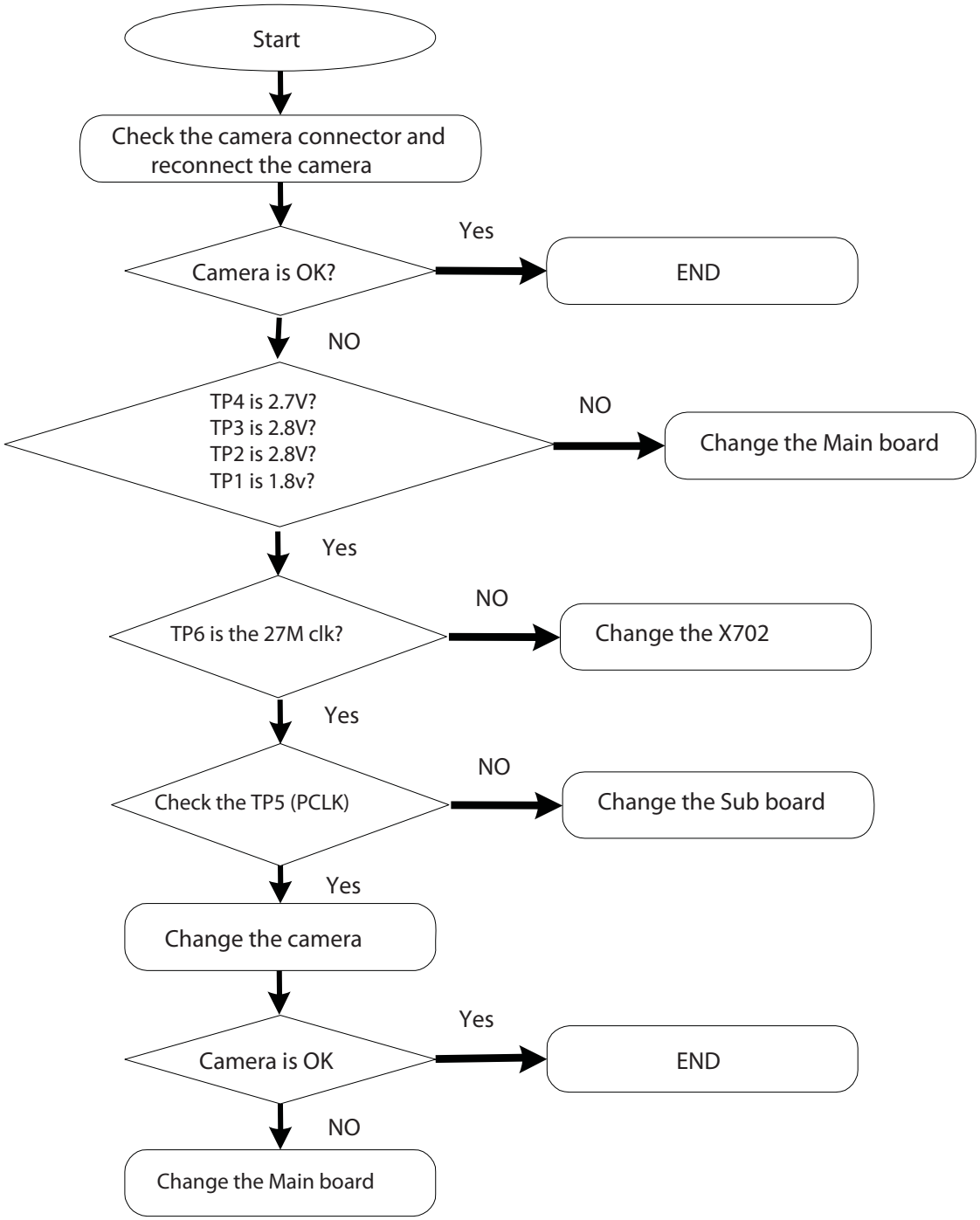

Copyright © 2009 LG Electronics. Inc. All right reserved.
Only for training and service purposes

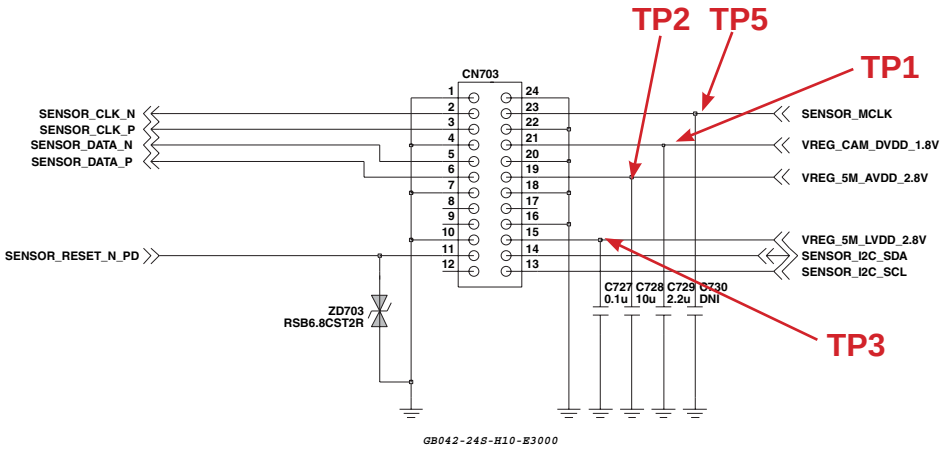

5M Camera ISP

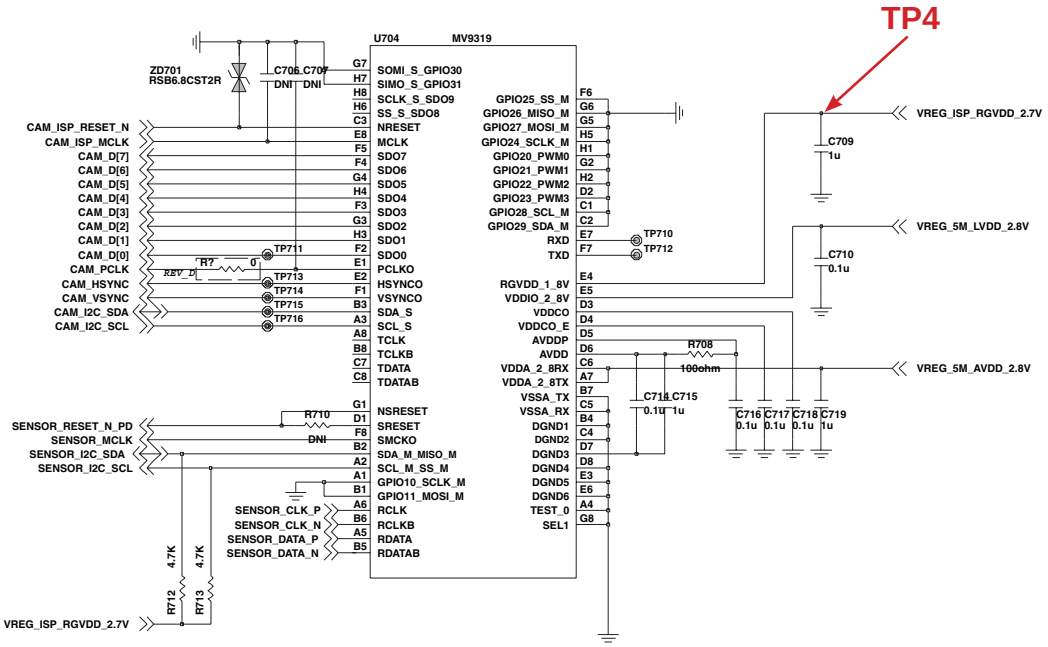

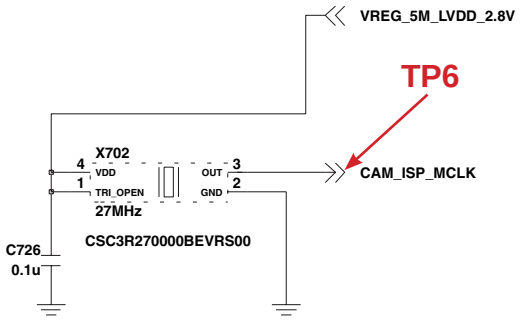

Copyright © 2009 LG Electronics. Inc. All right reserved.
Only for training and service purposes

LGE Internal Use Only

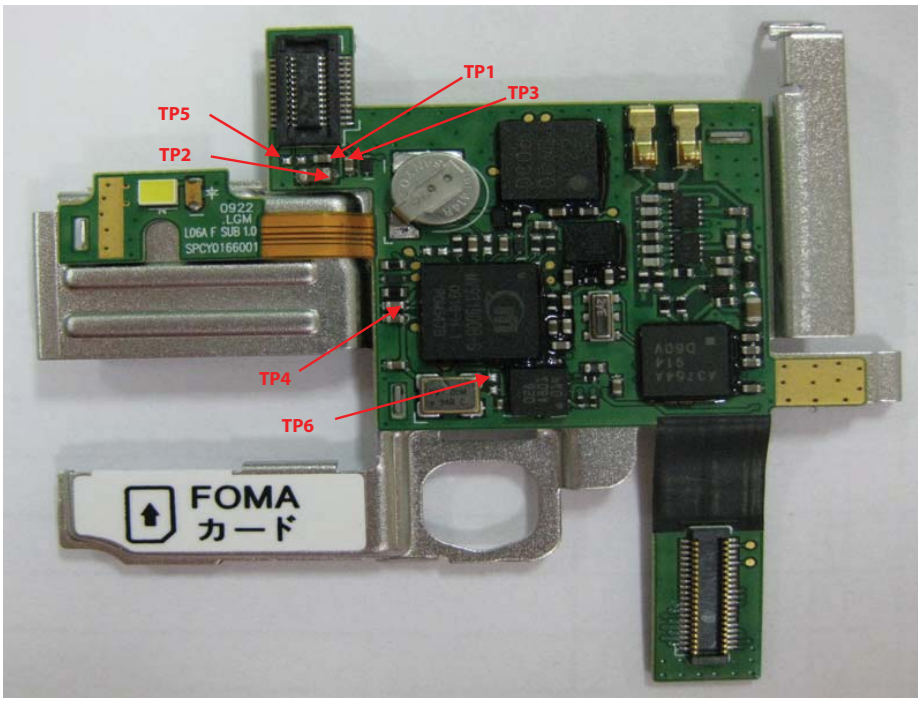

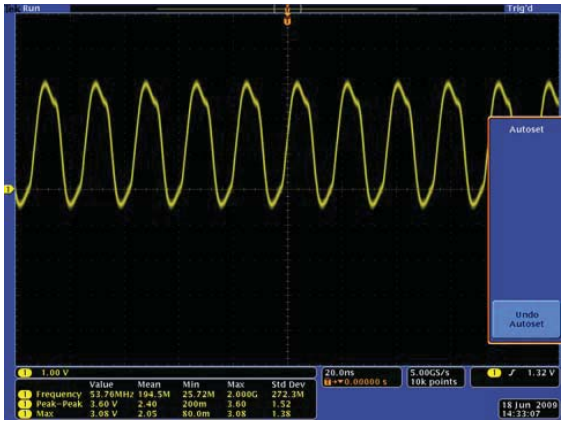

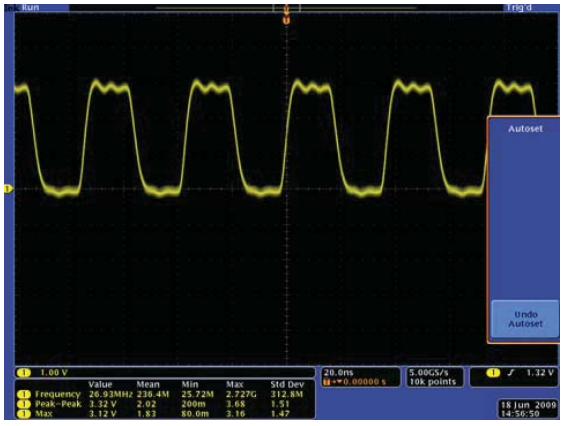

Copyright © 2009 LG Electronics. Inc. All right reserved.
Only for training and service purposes

4.9 Keypad Backlight Troubleshooting

Key Pad LED Light is on as below :
Key pressing → KEY_LED_DRV_N is Low → KEYPAD LED Lighting (on)

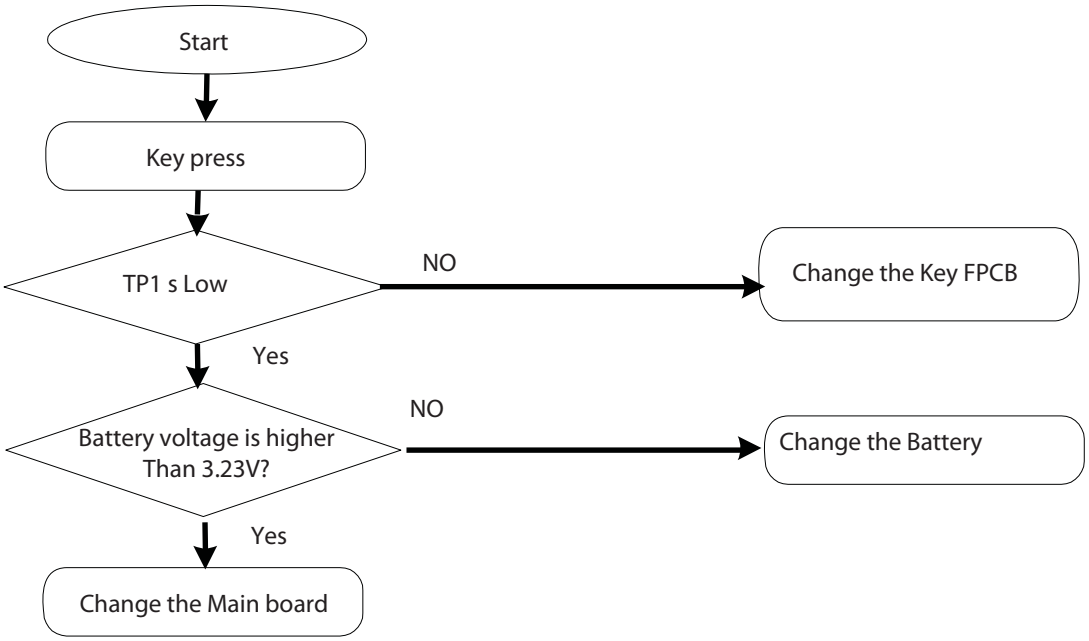

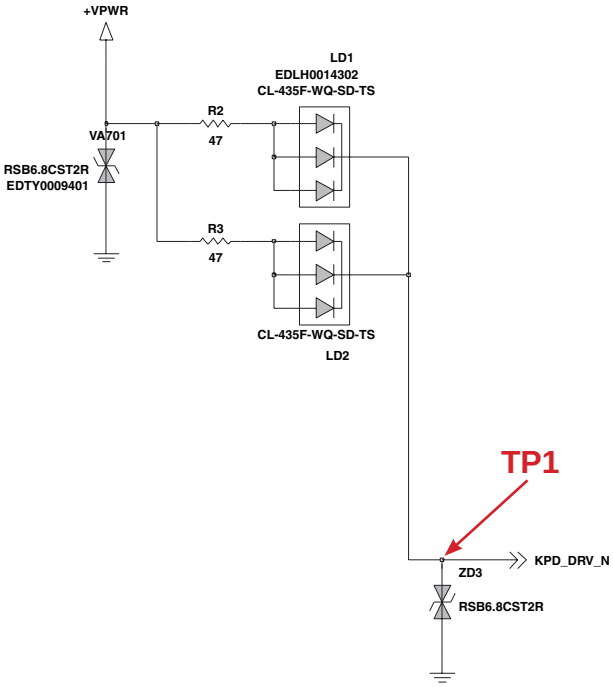

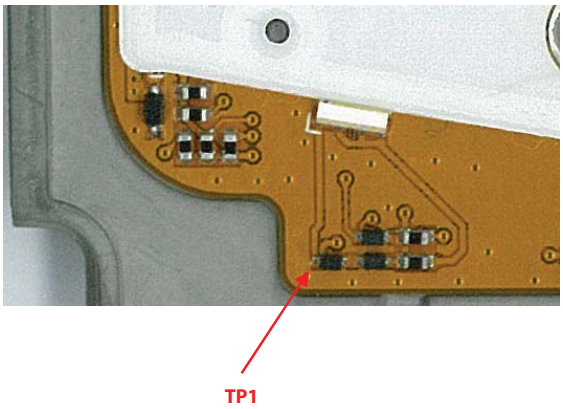

Copyright © 2009 LG Electronics. Inc. All right reserved.
Only for training and service purposes

LGE Internal Use Only

4.10 Folder Close / Open Troubleshooting

Folder Close / Open is worked as below :
Folder Close / Open Event -> Hall sensor(U700 pin OUT) is triggered
->MSM7200A Sense the Folder Event

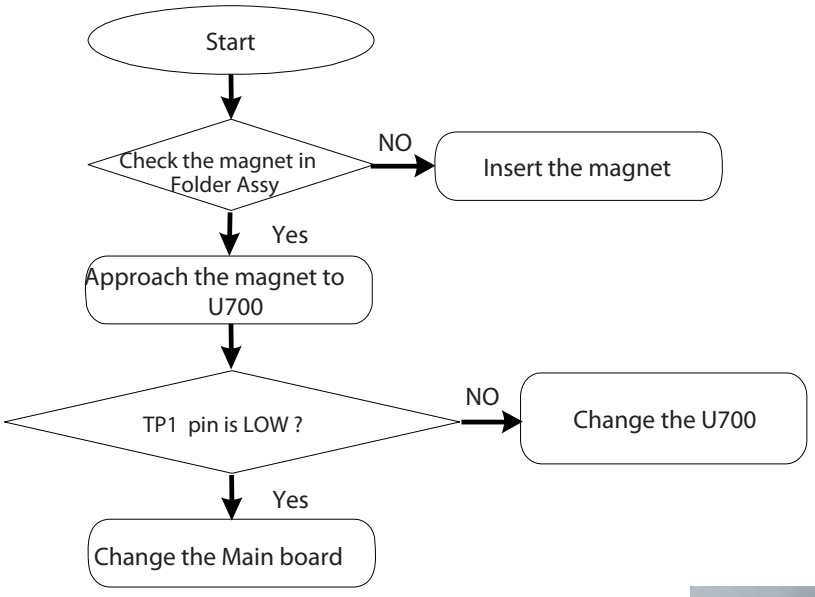

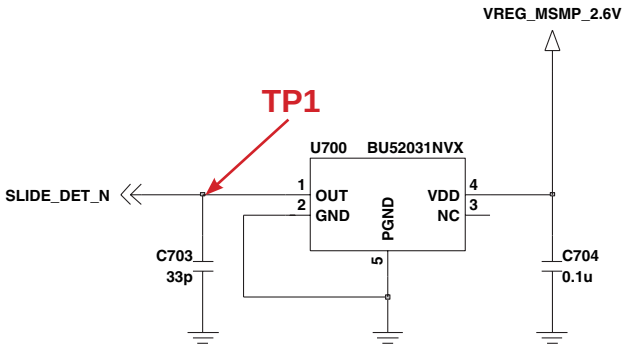

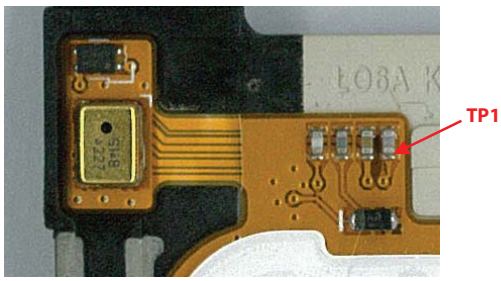

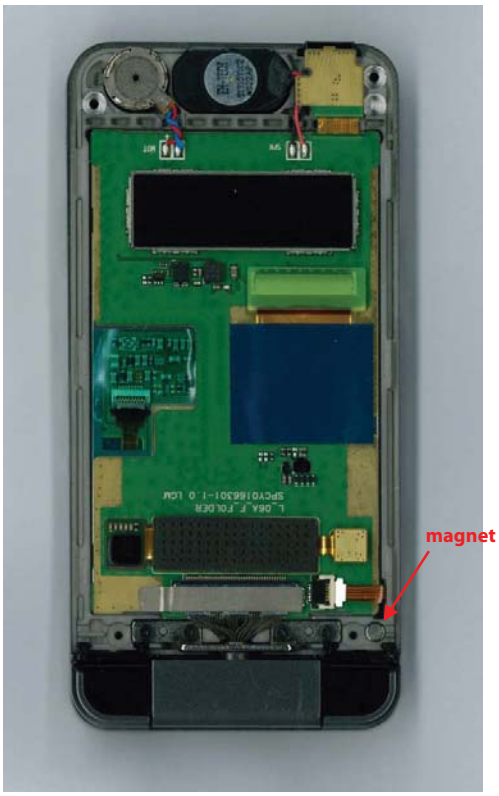

Copyright © 2009 LG Electronics. Inc. All right reserved.
Only for training and service purposes

4.11 Swivel Close / Open Troubleshooting

Swivel close / Open is worked as below :
Slide Close / Open Event -> Hall sensor(U701 pin OUT) is triggered
->MSM7200A Sense the Slide Event

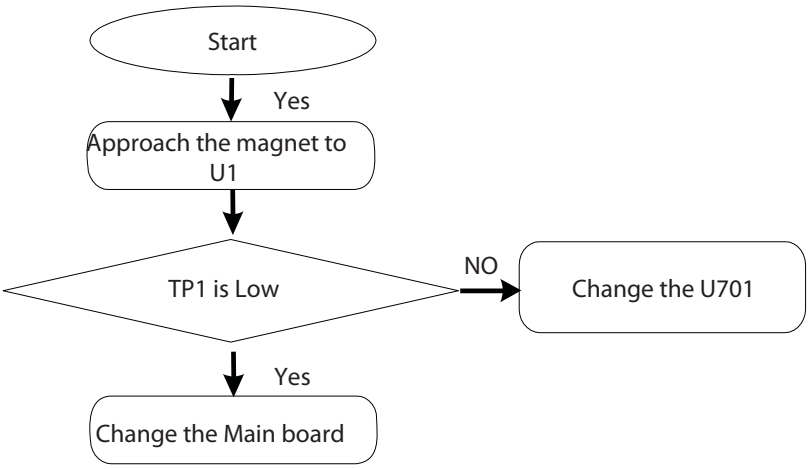

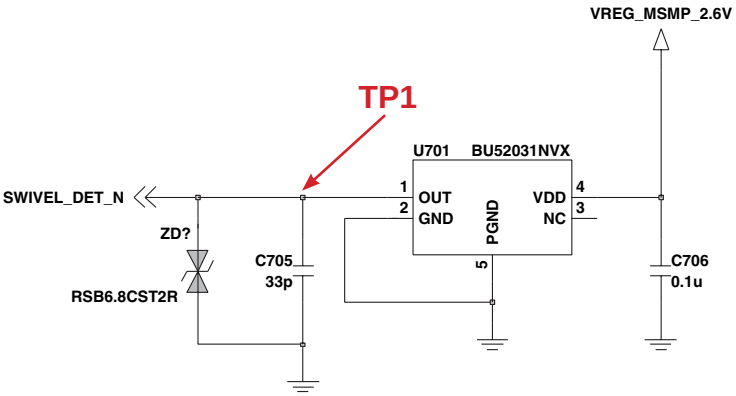

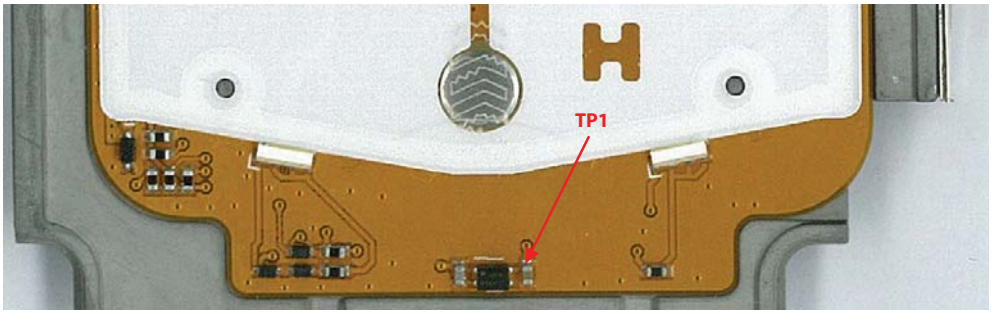

Copyright © 2009 LG Electronics. Inc. All right reserved.
Only for training and service purposes

LGE Internal Use Only

4.12 Main LCD Troubleshooting

Main LCD control signals are generated by MSM67200A. The signal path is :
MSM7200A → CN502+CN204(40pin Con) → CN203 (LCD zip Con.) → LCD Module

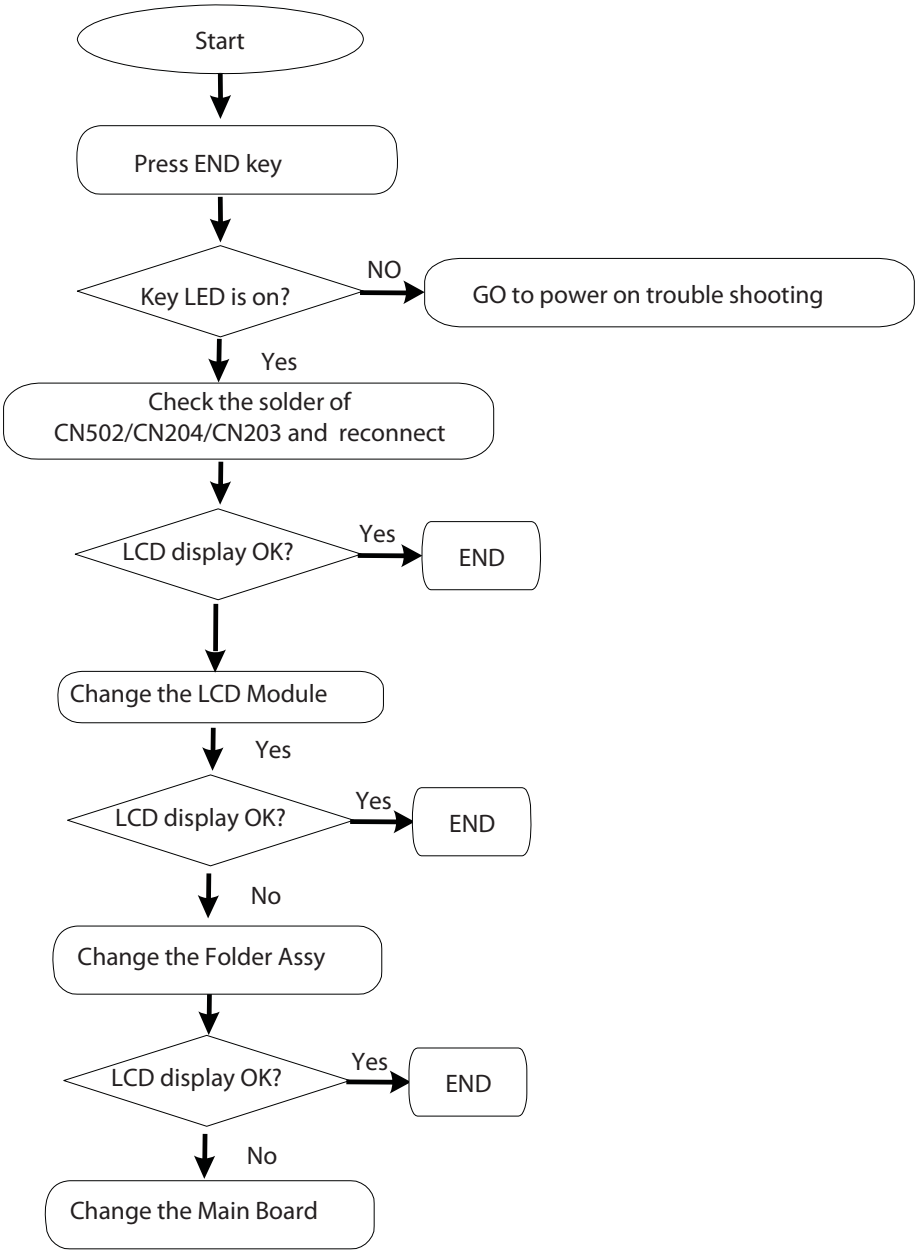

Copyright © 2009 LG Electronics. Inc. All right reserved.
Only for training and service purposes

4.13 Receiver Path

MSM7200A RCV+/RCV- → IC500 → Main to Folder cable → Receiver

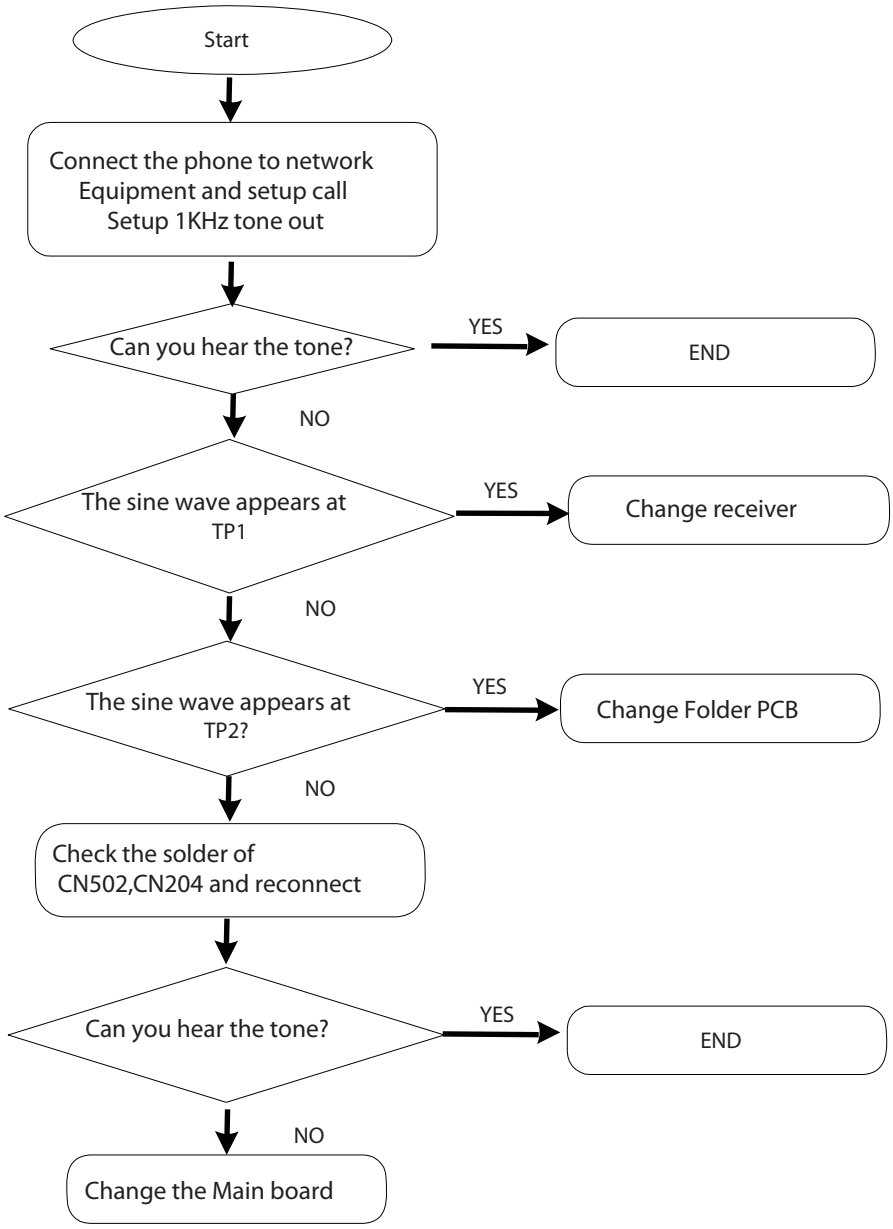

Copyright © 2009 LG Electronics. Inc. All right reserved.
Only for training and service purposes

LGE Internal Use Only

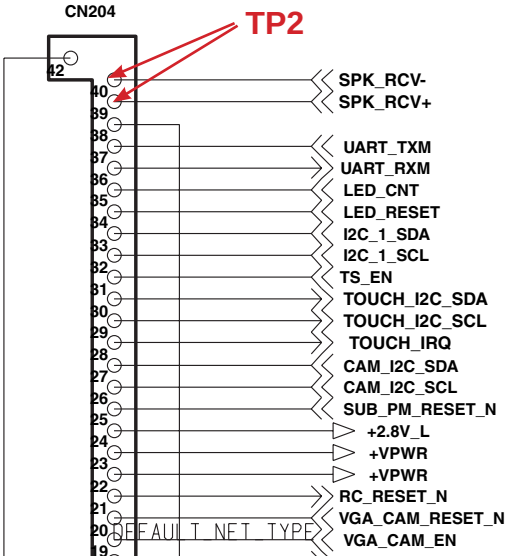

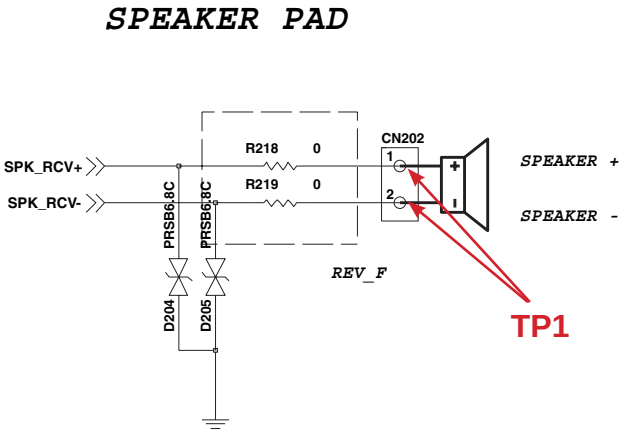

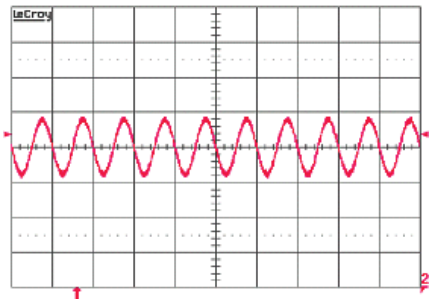

Copyright © 2009 LG Electronics. Inc. All right reserved.
Only for training and service purposes

4.14 Headset path

MSM7200A HP_R_USB+, HP_L_USB- → AMP (IC500) → Analog switch (U403) → CN401 (Ear jack & IO Con)

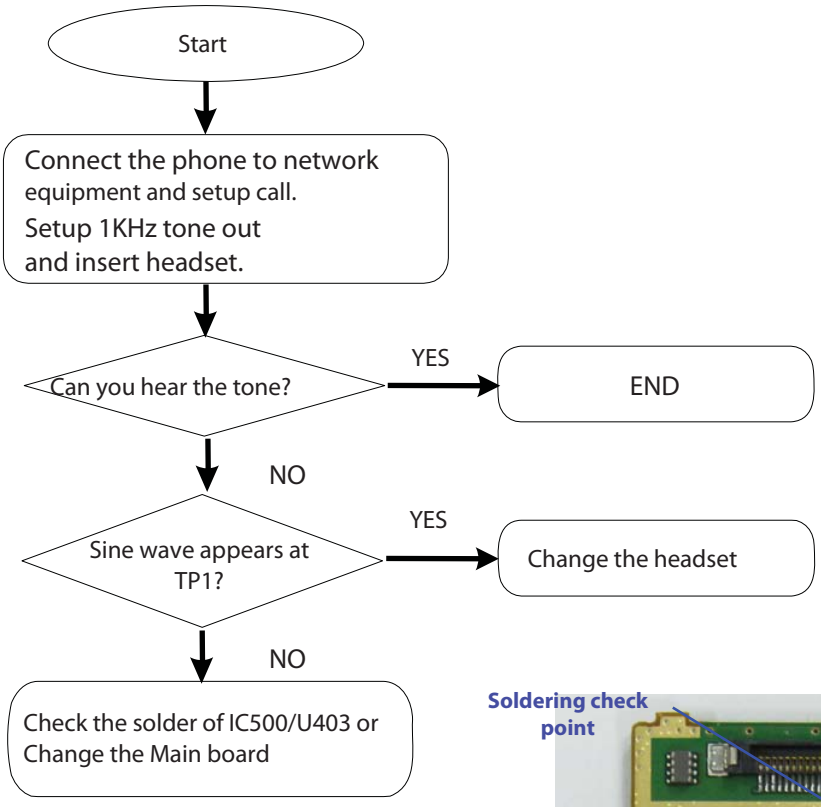

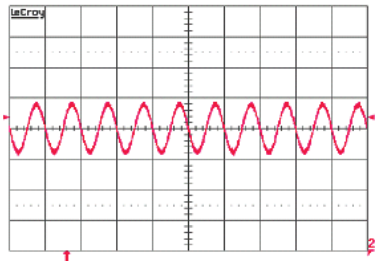

< Main Bottom >

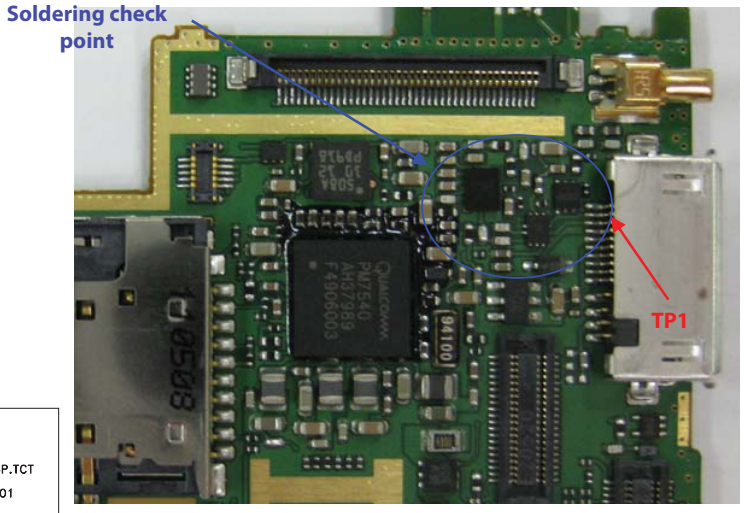

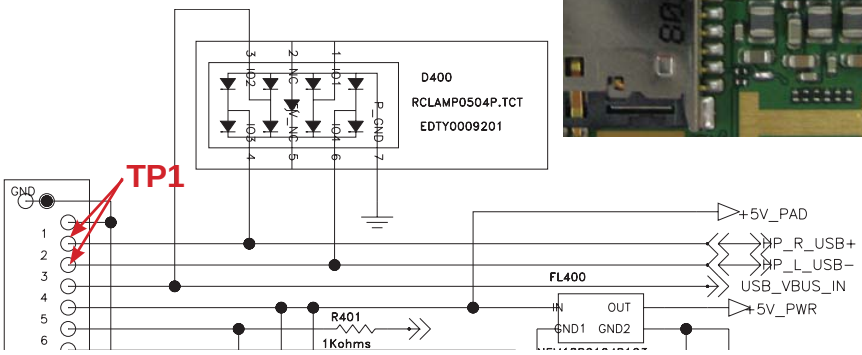

Copyright © 2009 LG Electronics. Inc. All right reserved.
Only for training and service purposes

LGE Internal Use Only

4.15 Speaker phone path

MSM7200A LINE_OUT_R, LINE_OUT_L -> Audio Processor (IC500) -> Main to Folder Connector → Speaker

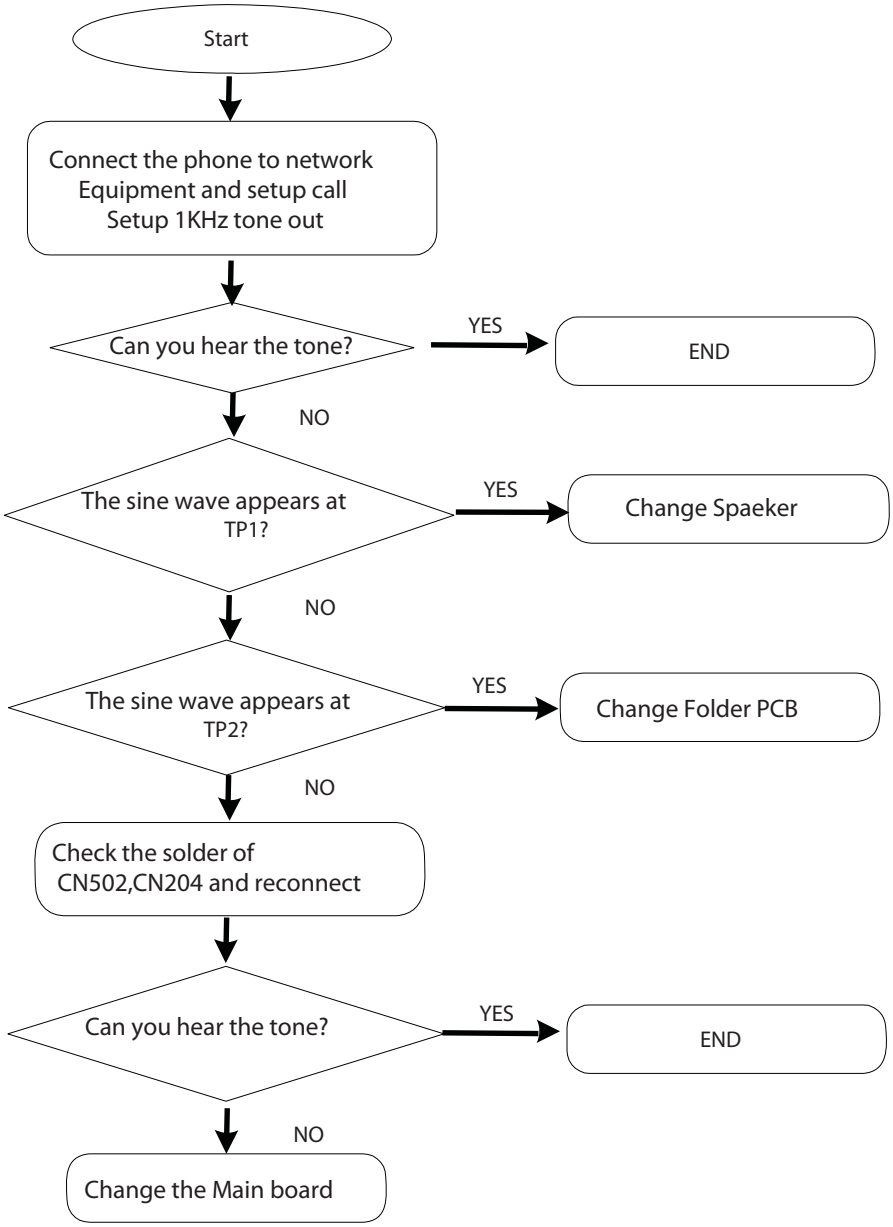

Copyright © 2009 LG Electronics. Inc. All right reserved.
Only for training and service purposes

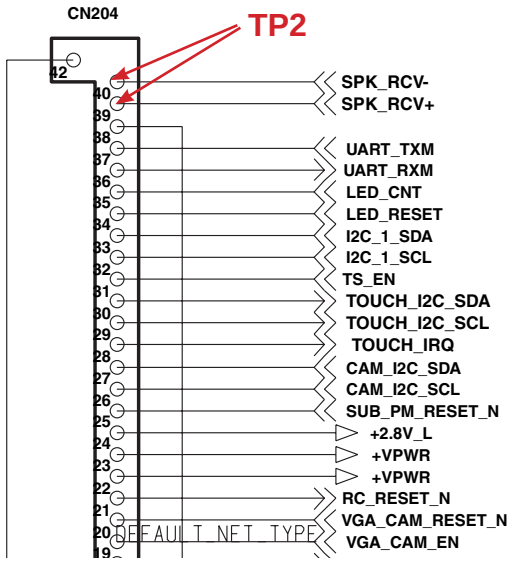

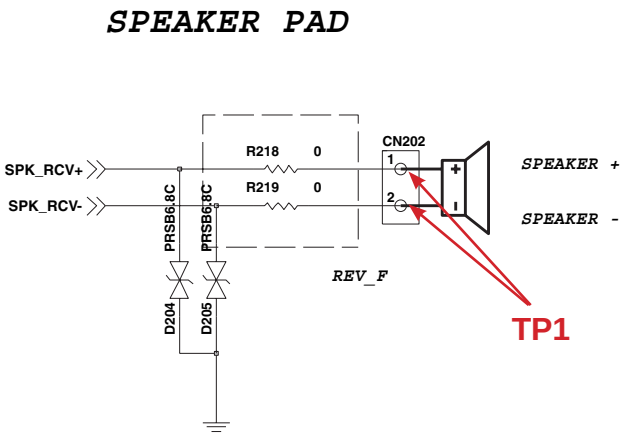

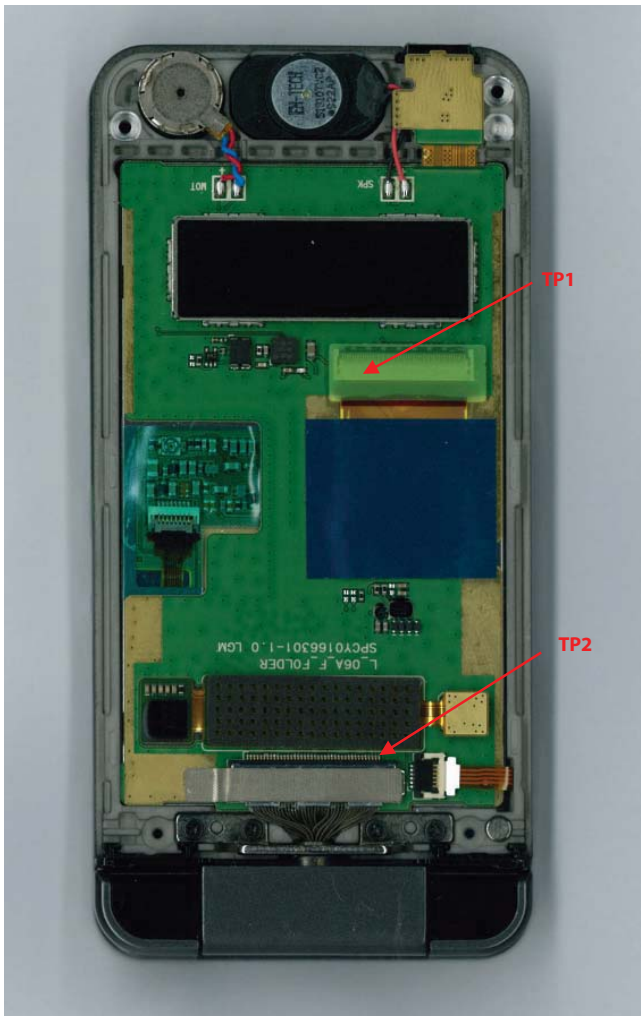

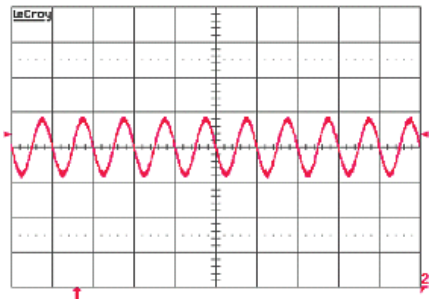

Copyright © 2009 LG Electronics. Inc. All right reserved.
Only for training and service purposes

LGE Internal Use Only

4.16 Main microphone

MIC1 → C3,C5 → MIC1P (MSM6280)

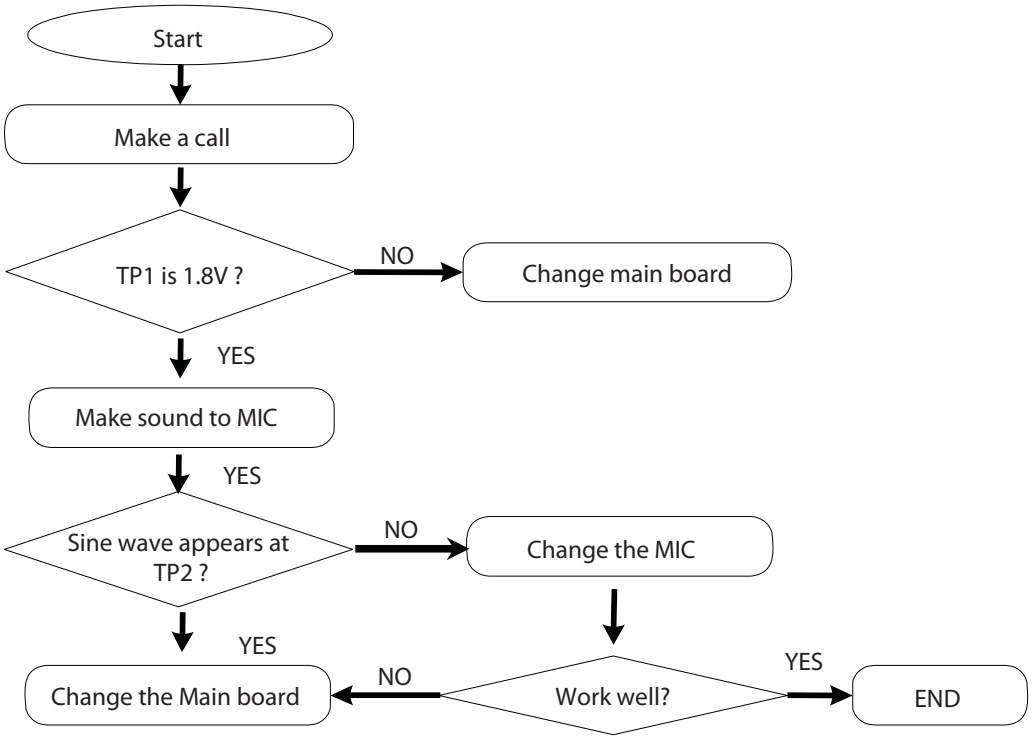

Copyright © 2009 LG Electronics. Inc. All right reserved.
Only for training and service purposes

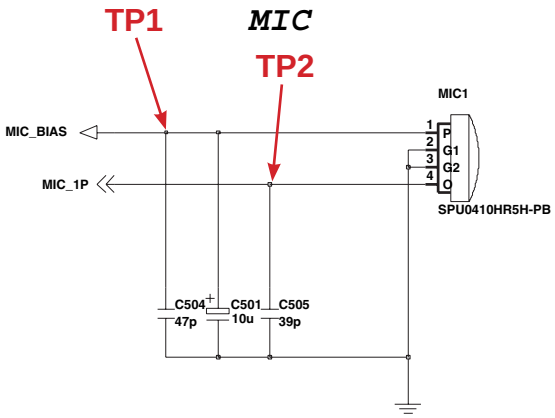

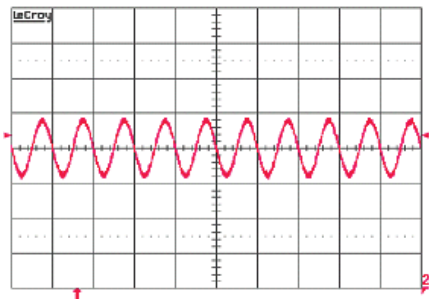

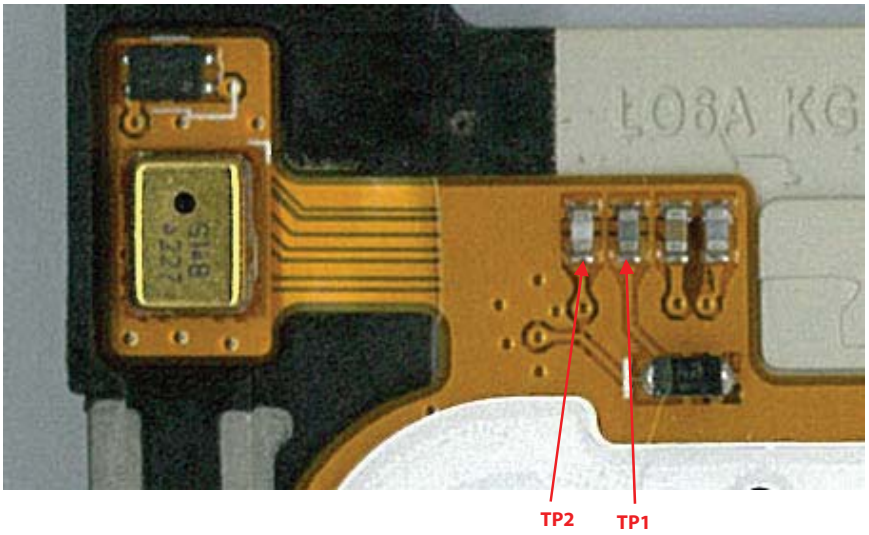

Copyright © 2009 LG Electronics. Inc. All right reserved.
Only for training and service purposes

LGE Internal Use Only

4.17 Headset microphone

Headset → D402 → MIC2P(MSM7200A)

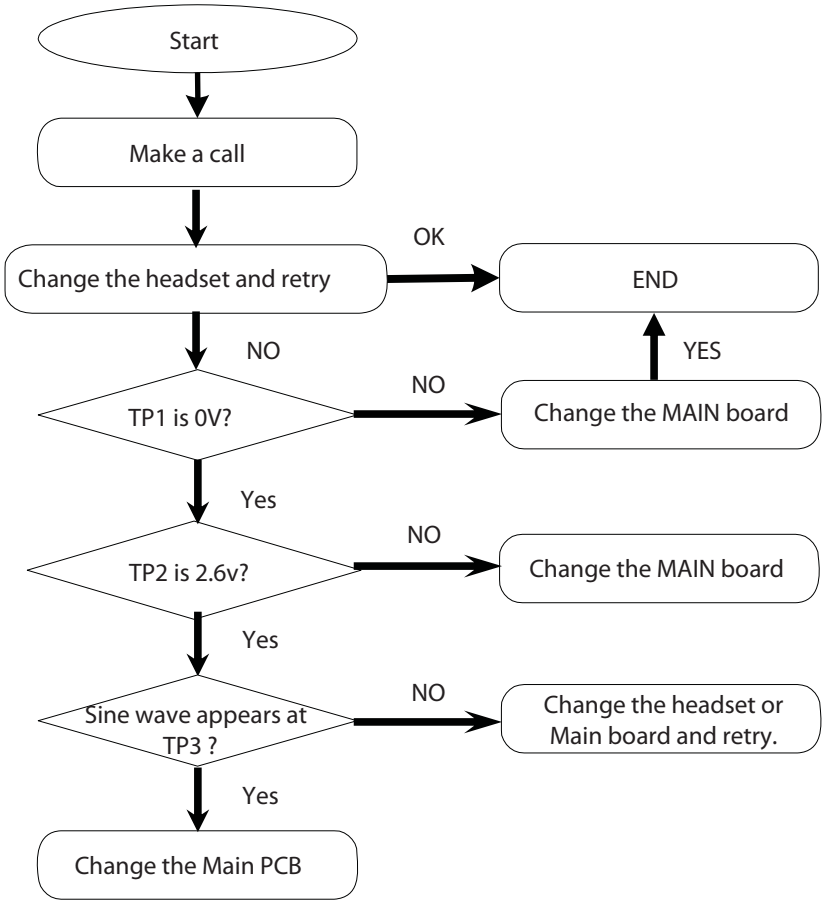

Copyright © 2009 LG Electronics. Inc. All right reserved.
Only for training and service purposes

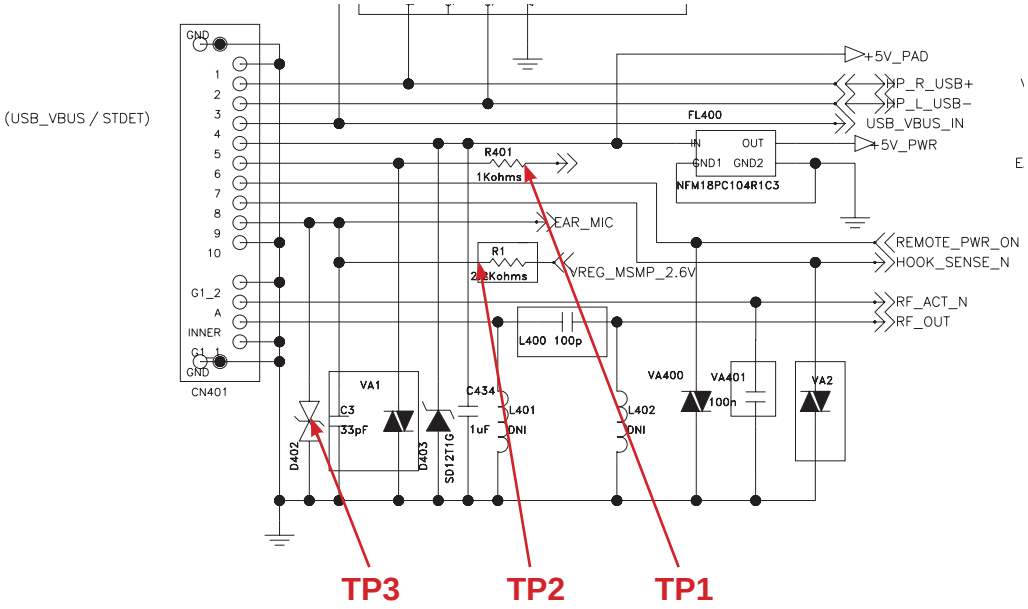

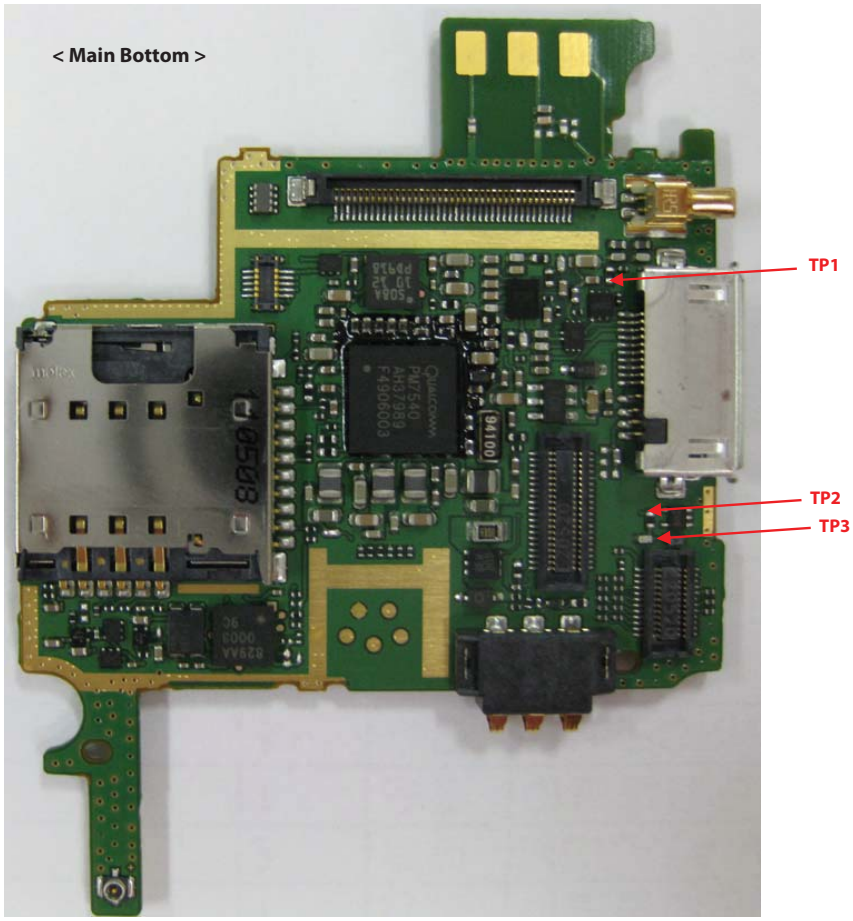

Copyright © 2009 LG Electronics. Inc. All right reserved.
Only for training and service purposes

LGE Internal Use Only

4.18 Vibrator

MSM_MOTOR_EN → Numeric Key PCB → Motor

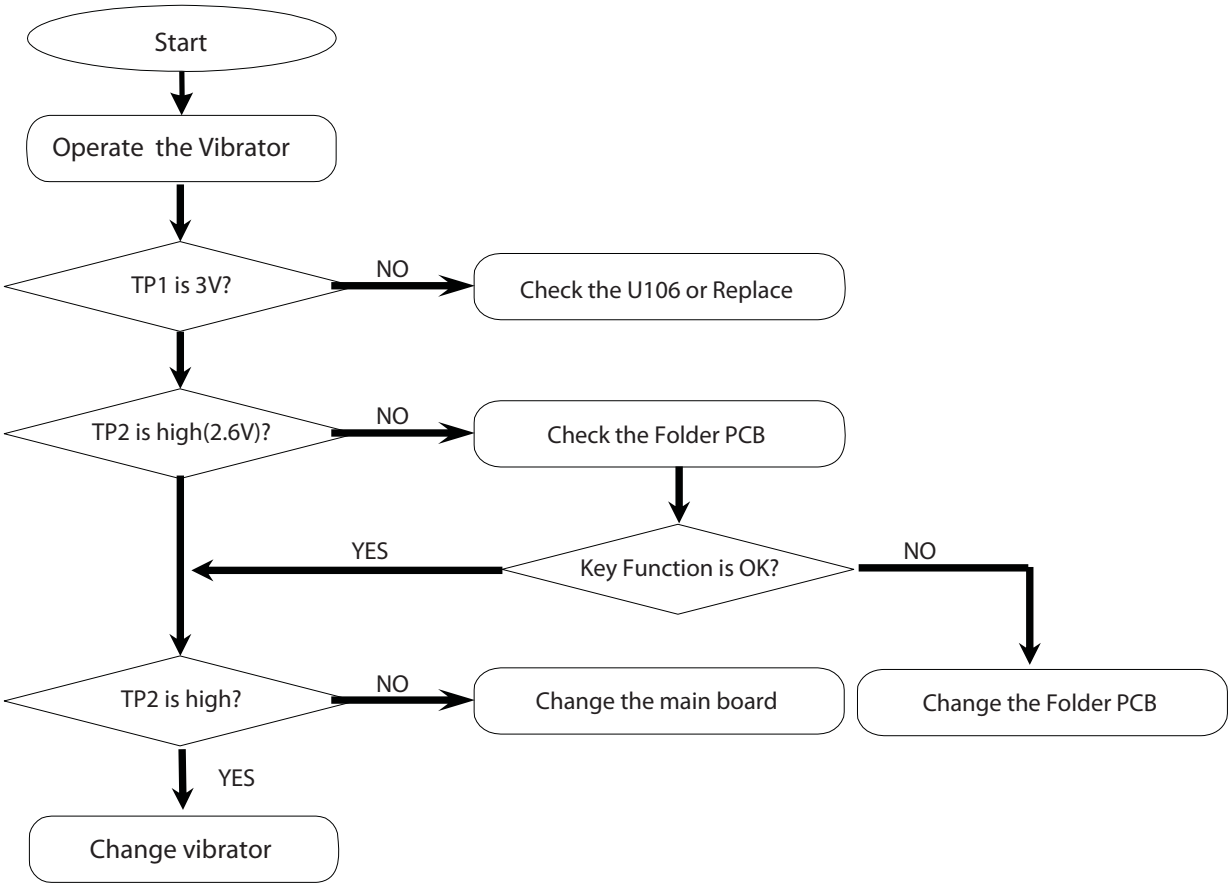

Copyright © 2009 LG Electronics. Inc. All right reserved.
Only for training and service purposes

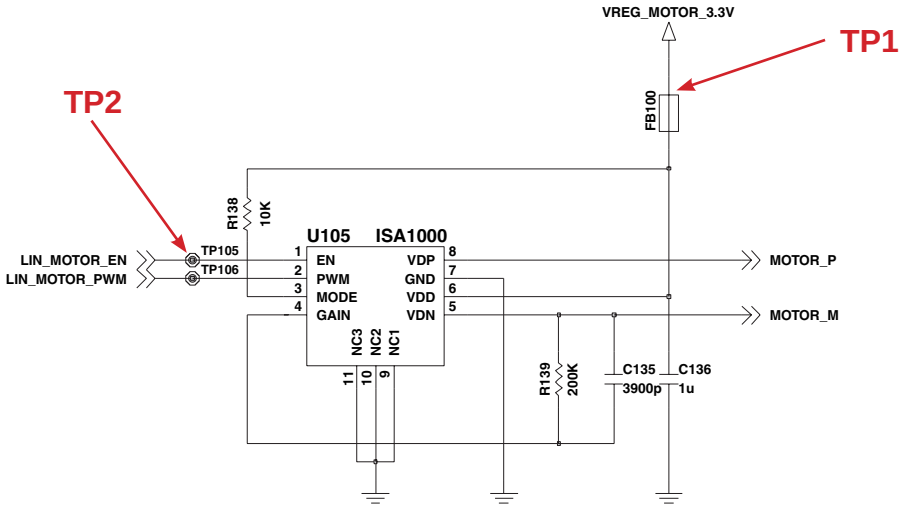

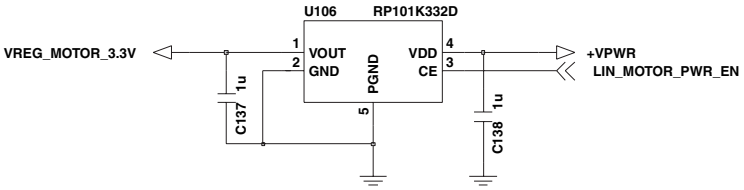

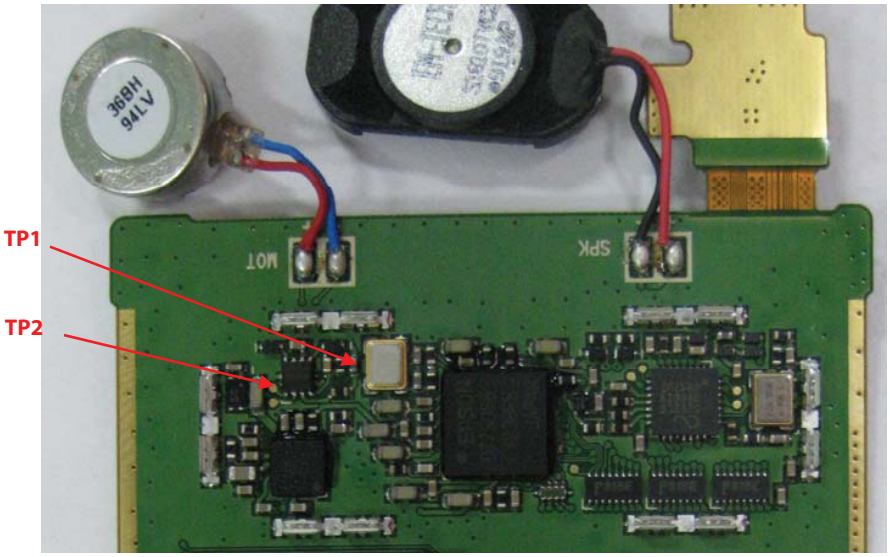

Copyright © 2009 LG Electronics. Inc. All right reserved.
Only for training and service purposes

LGE Internal Use Only

4.19 1-seg

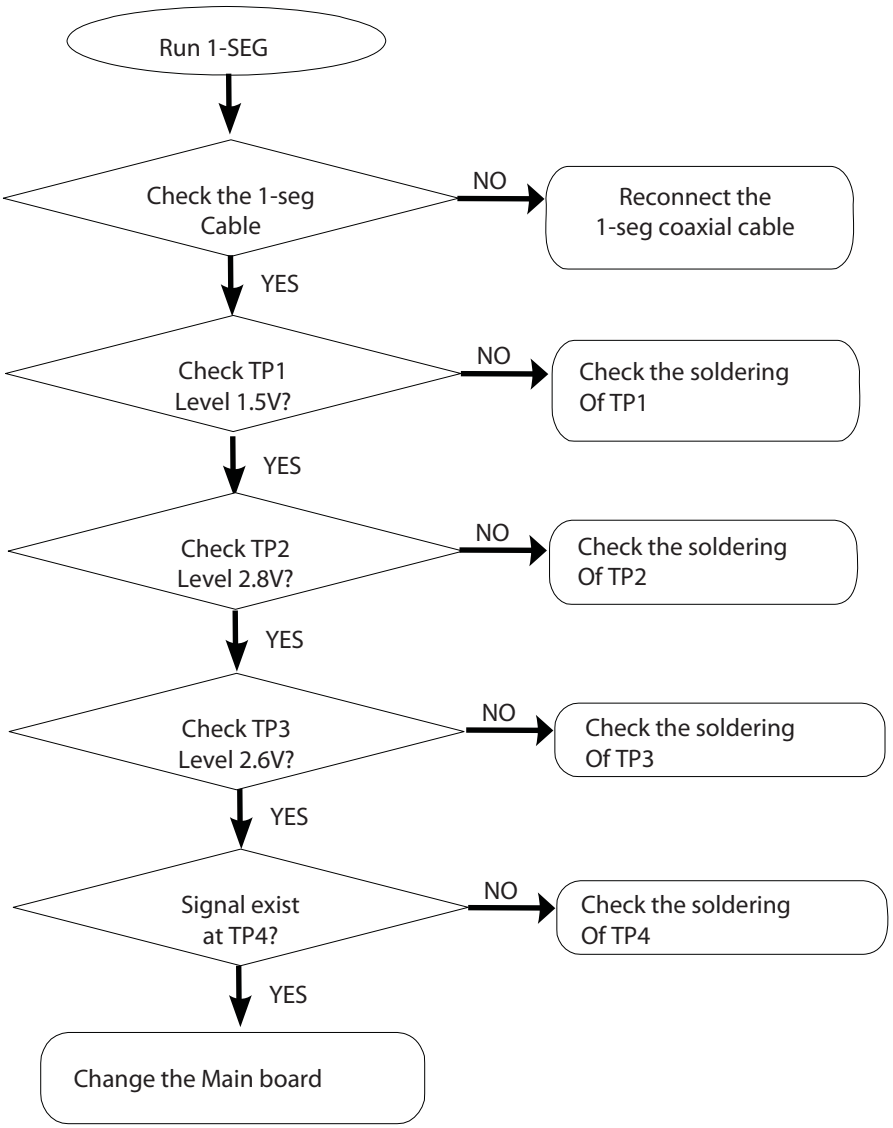

Copyright © 2009 LG Electronics. Inc. All right reserved.
Only for training and service purposes

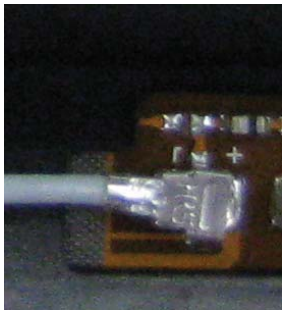

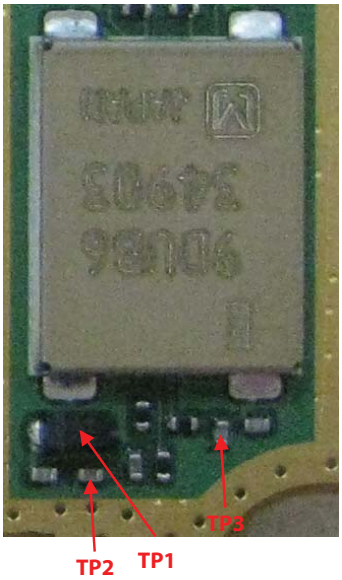

1-seg coaxial cable is connected between Main pcb and Key pcb.

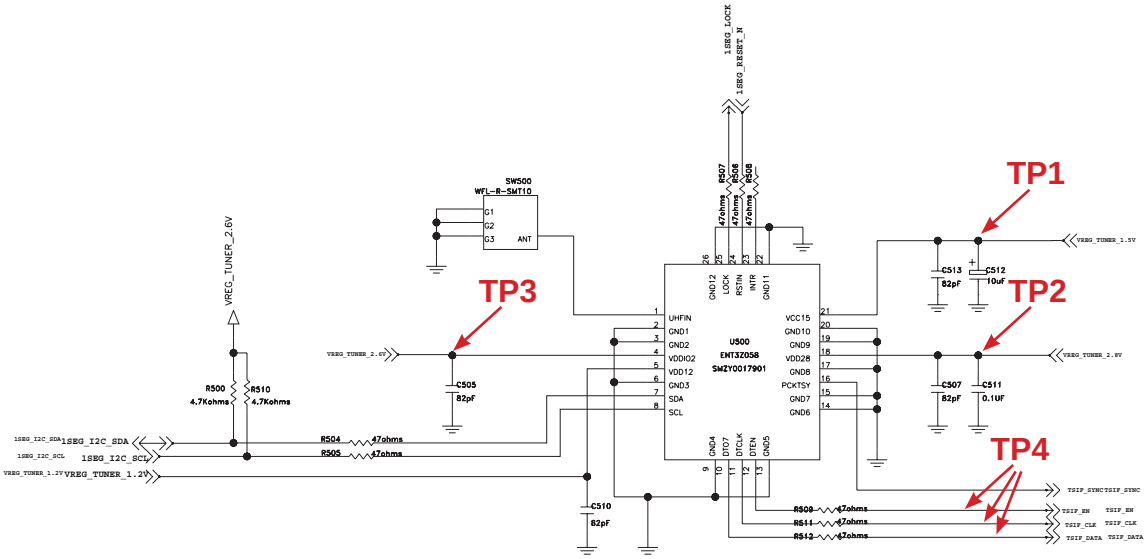

Copyright © 2009 LG Electronics. Inc. All right reserved.
Only for training and service purposes

LGE Internal Use Only

4.20 3AXIS Sensor

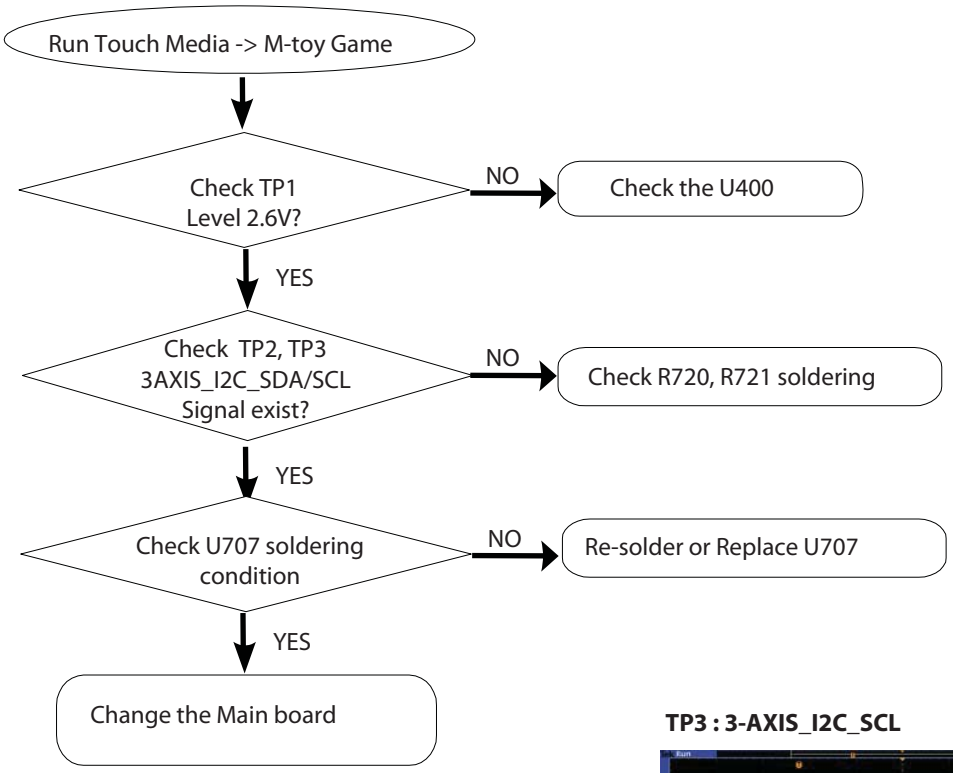

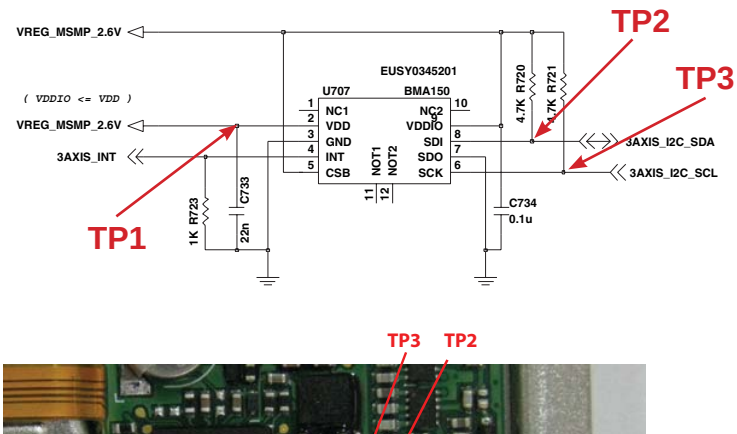

TP3 : 3-AXIS_I2C_SCL

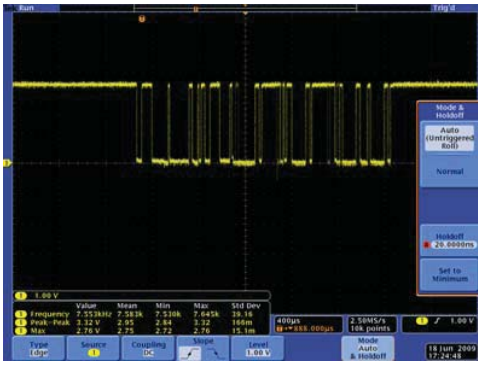

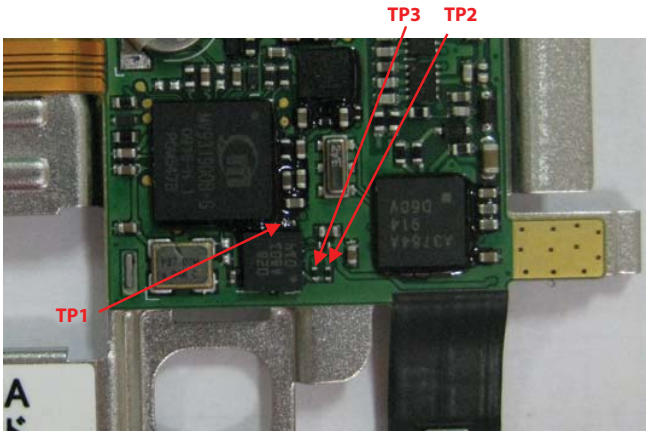

TP2 : 3-AXIS_I2C_SDA

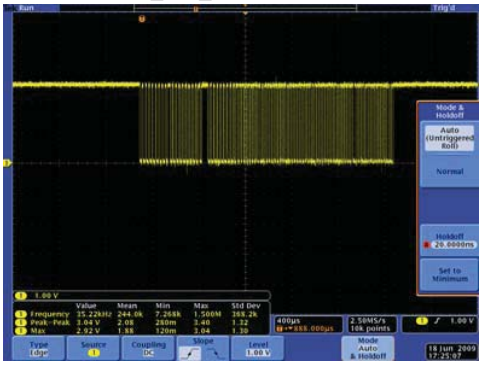

Copyright © 2009 LG Electronics. Inc. All right reserved.
Only for training and service purposes

4.21 Touch Sensor

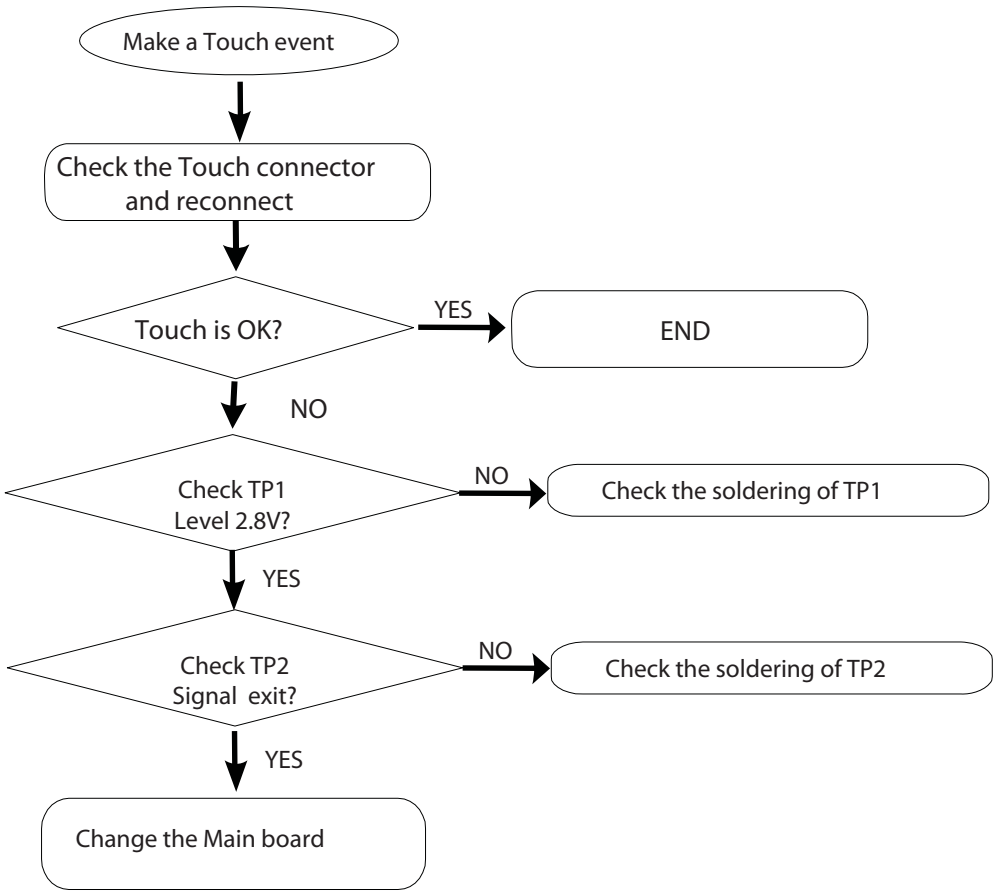

Copyright © 2009 LG Electronics. Inc. All right reserved.
Only for training and service purposes

LGE Internal Use Only

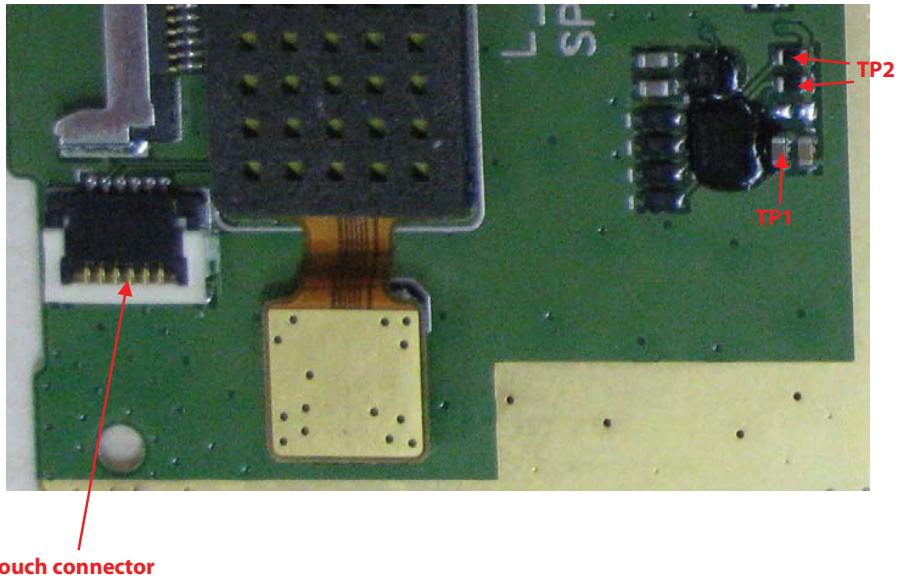

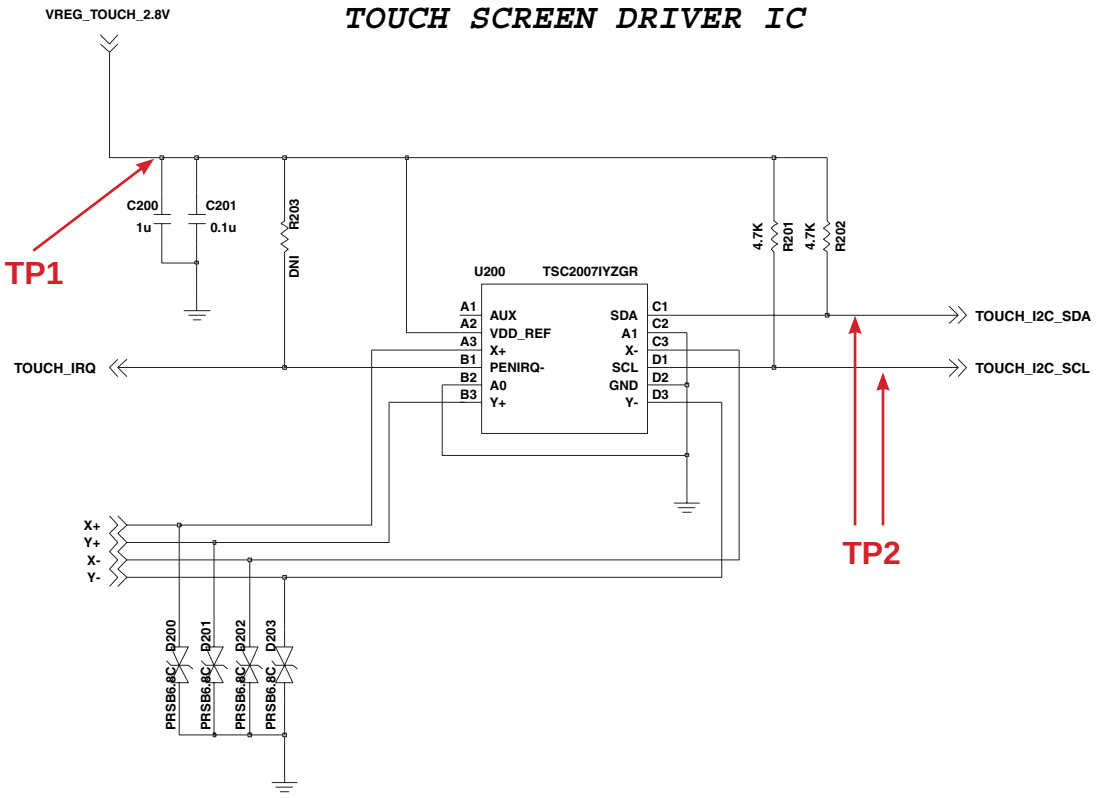

Copyright © 2009 LG Electronics. Inc. All right reserved.
Only for training and service purposes

4.22 SD card operation

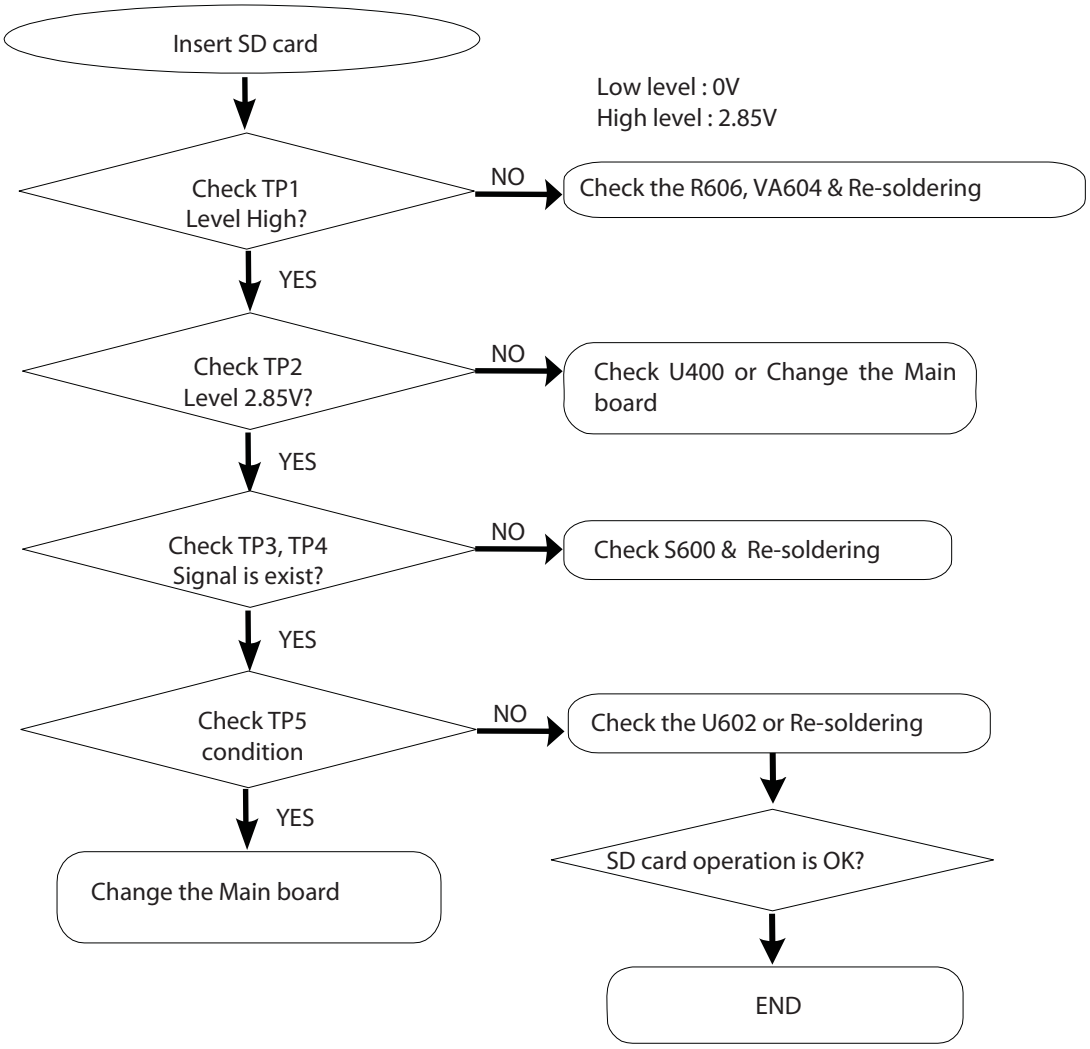

Copyright © 2009 LG Electronics. Inc. All right reserved.
Only for training and service purposes

LGE Internal Use Only

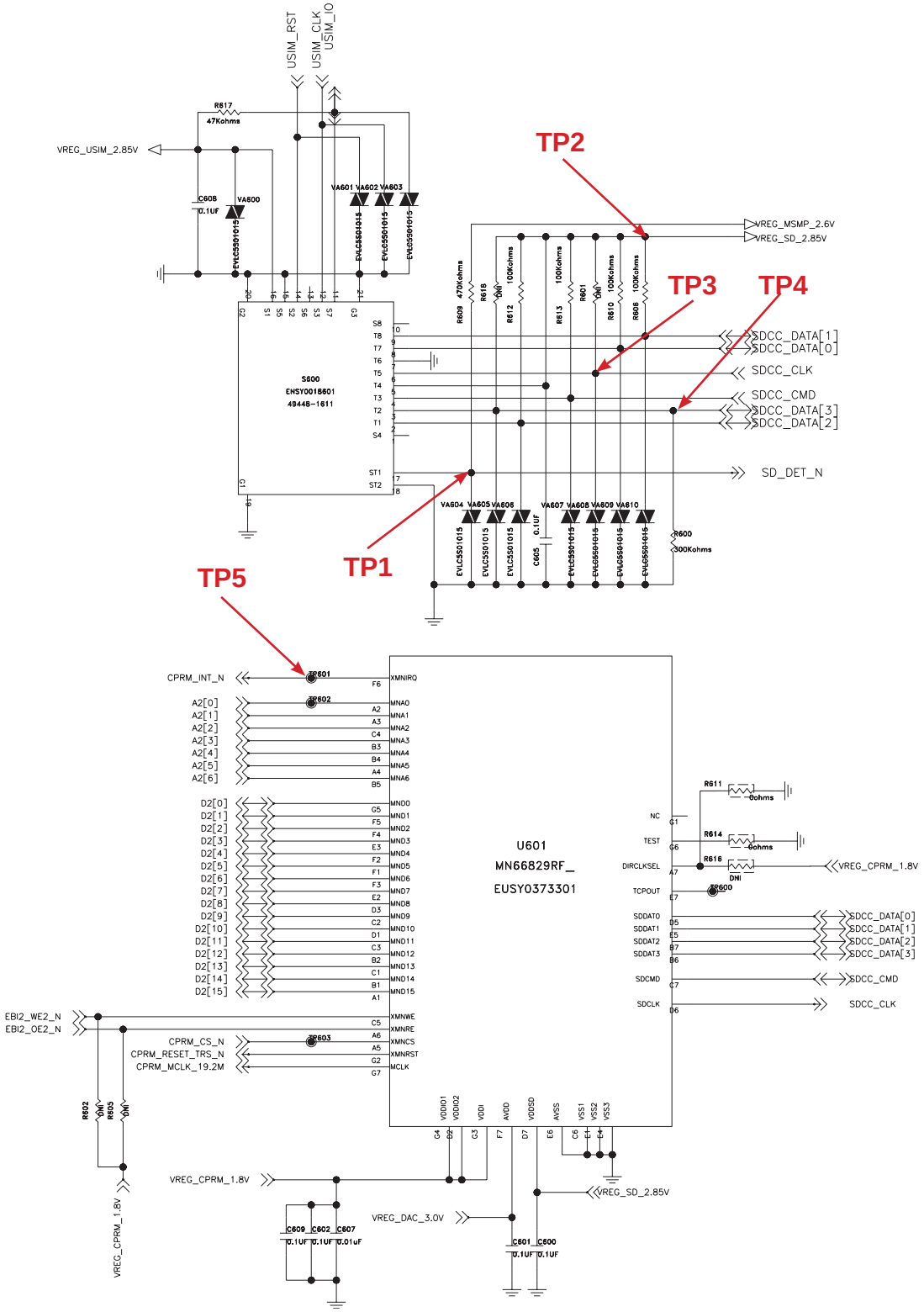

Copyright © 2009 LG Electronics. Inc. All right reserved.
Only for training and service purposes

1 EBI2_OE2_N

2 SDCLK

3 INT_N

4 TCXO

Signal condition at SD card inserted

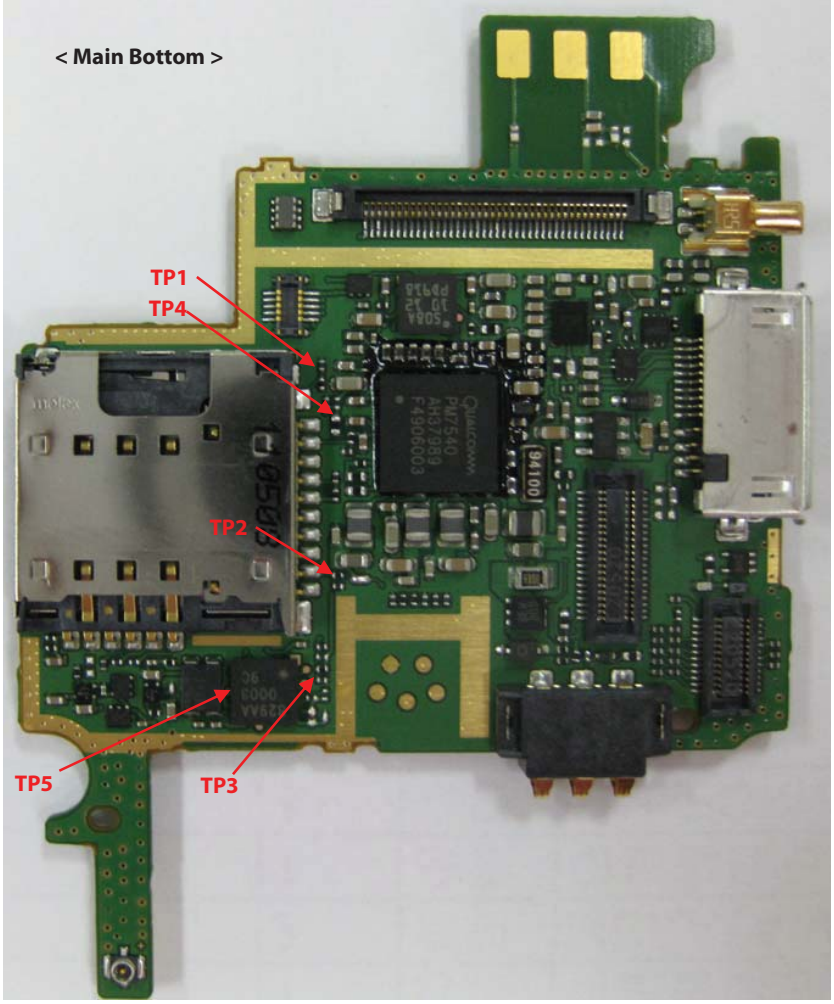

Copyright © 2009 LG Electronics. Inc. All right reserved.
Only for training and service purposes

LGE Internal Use Only

4.23 Light Sensor Operation

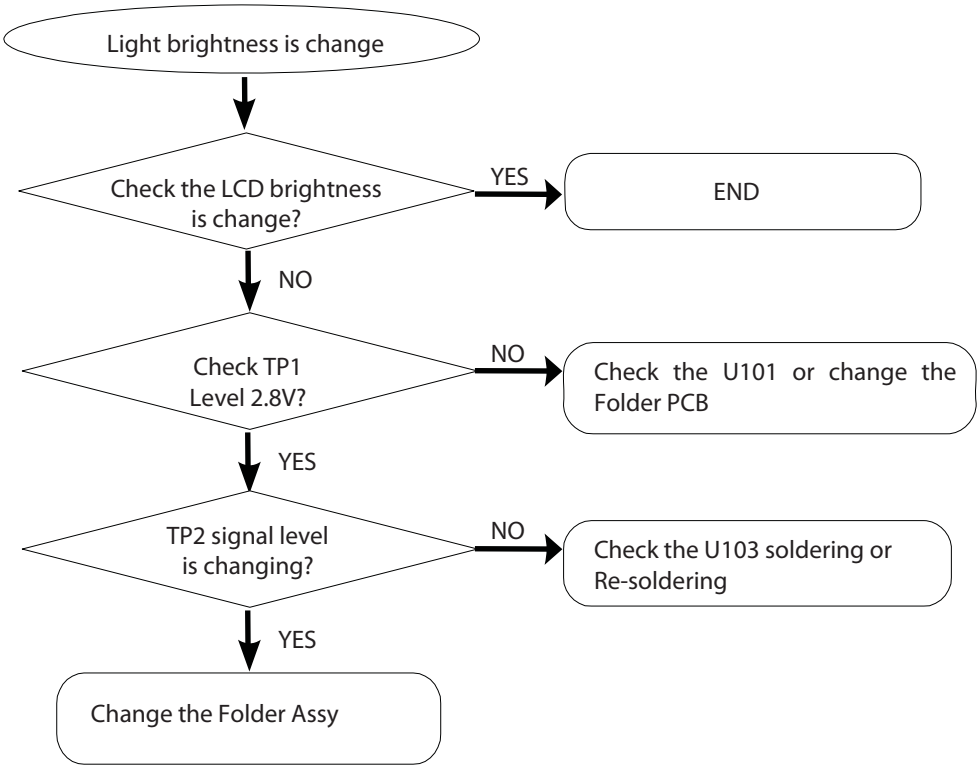

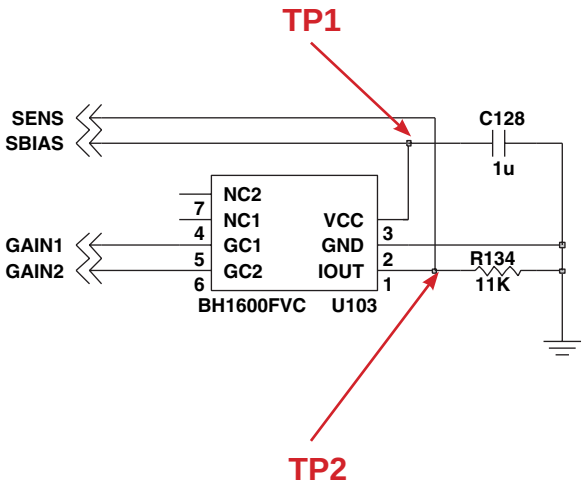

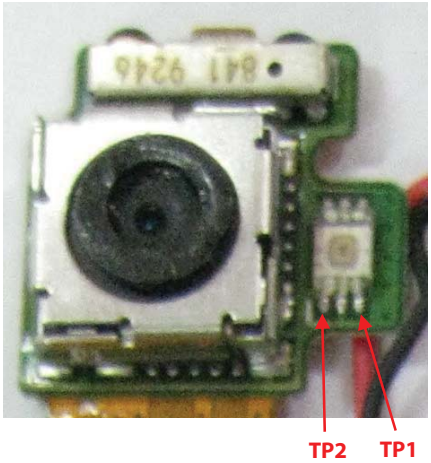

Copyright © 2009 LG Electronics. Inc. All right reserved.
Only for training and service purposes

4.24 FeliCa

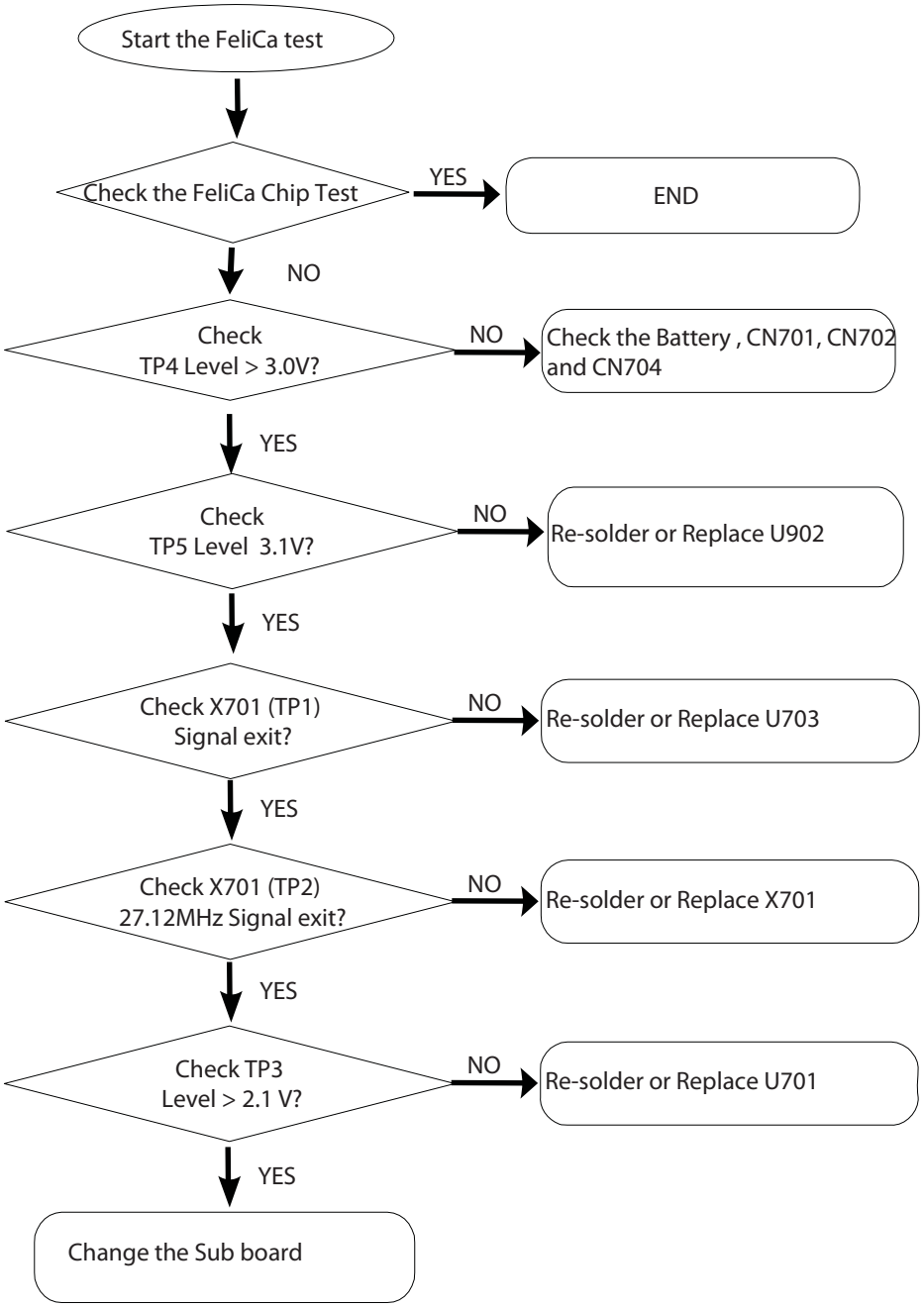

Copyright © 2009 LG Electronics. Inc. All right reserved.
Only for training and service purposes

LGE Internal Use Only

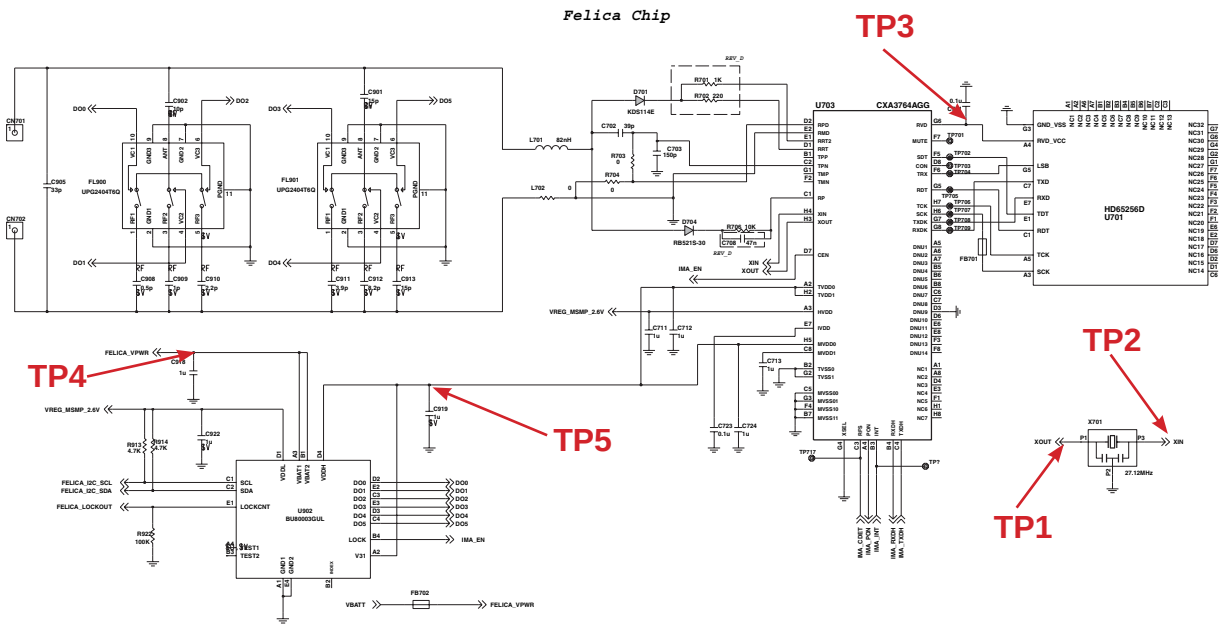

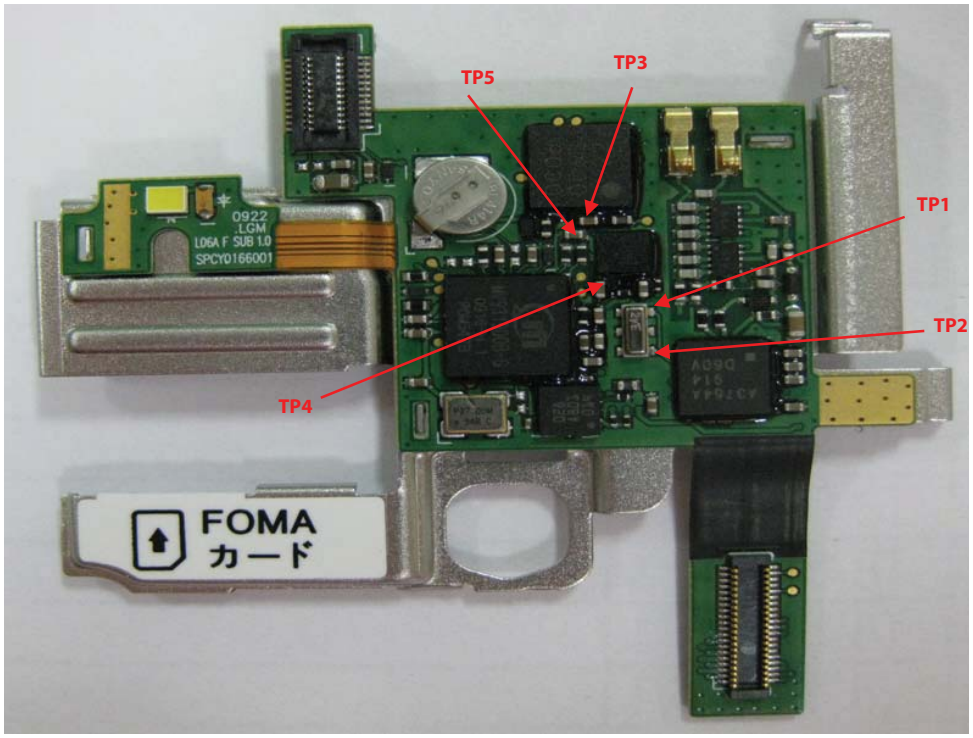

Copyright © 2009 LG Electronics. Inc. All right reserved.
Only for training and service purposes

5. Downloading

5.1 Introduction

LGMDP is a LGE application that allow users to download images from PC to handset. LGMDP is a download tool with capabilities to upload image files to the handset. LGMDP is designed to be simple to use and easy enough for the beginner to upload executable images to the handset.
LGMDP supports Windows 2000/XP where the LG USB modem driver is installed. Additionally, LGMDP allows multi downloading up to 8 handsets at the same time.

** The model name in the picture can be different from yours.*

Copyright © 2009 LG Electronics. Inc. All right reserved.
Only for training and service purposes

LGE Internal Use Only

5.2 Downloading Procedure

1) Setup Preferences

Connect the phone to your desktop PC using the USB cable and run the LGMDP application. Before getting started, set up LGMDP preferences from the Preferences of the file menu the way you want. Click on the File menu and select Preferences.

▶ **Play a success sound**

This is an experimental feature. To enable this simply check the box. It will be played a .wav file when the download has been completed.

▶ **Automatically run "Select Port" When LGMDP starts**

This option is designed to give user convenient. When LGMDP starts, it will automatically select "Select Port" button to download new image file.

▶ **Always on Top**

Check if LGMDP always appears at the top of the window so that user can monitor it all the time.

▶ **Windows Size**

If you want to change program window size, change this option.

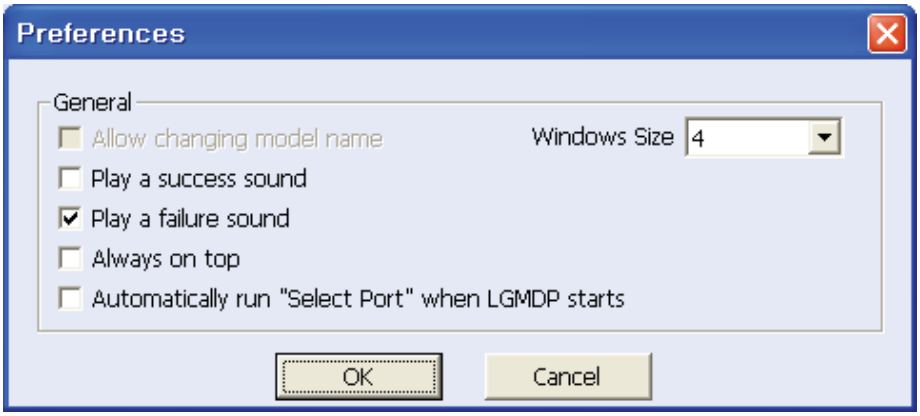

Copyright © 2009 LG Electronics. Inc. All right reserved.
Only for training and service purposes

Click on the Select Port and then Select Port window will be pop up. Check if state shows Enable for the port to be connected for downloading images. Then click on the Connect button.

(The port number(COM9) and model name shall be different from that of the port number in the snapshot.)

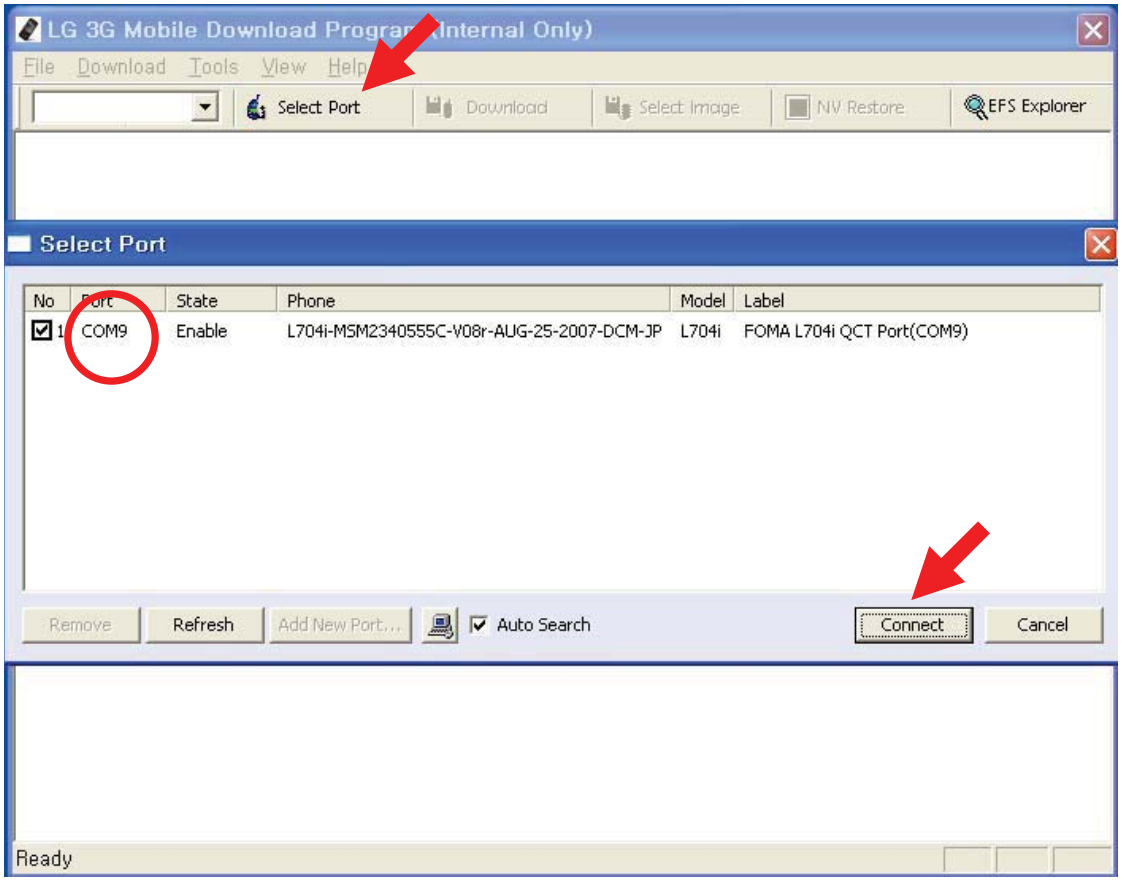

Copyright © 2009 LG Electronics. Inc. All right reserved.
Only for training and service purposes

LGE Internal Use Only

The status **Ready** is displayed when the application is ready for downloading. While the images are transmitted from PC to the handset, a progressive bar (Red box) indicating the degree of transmission of data is displayed.

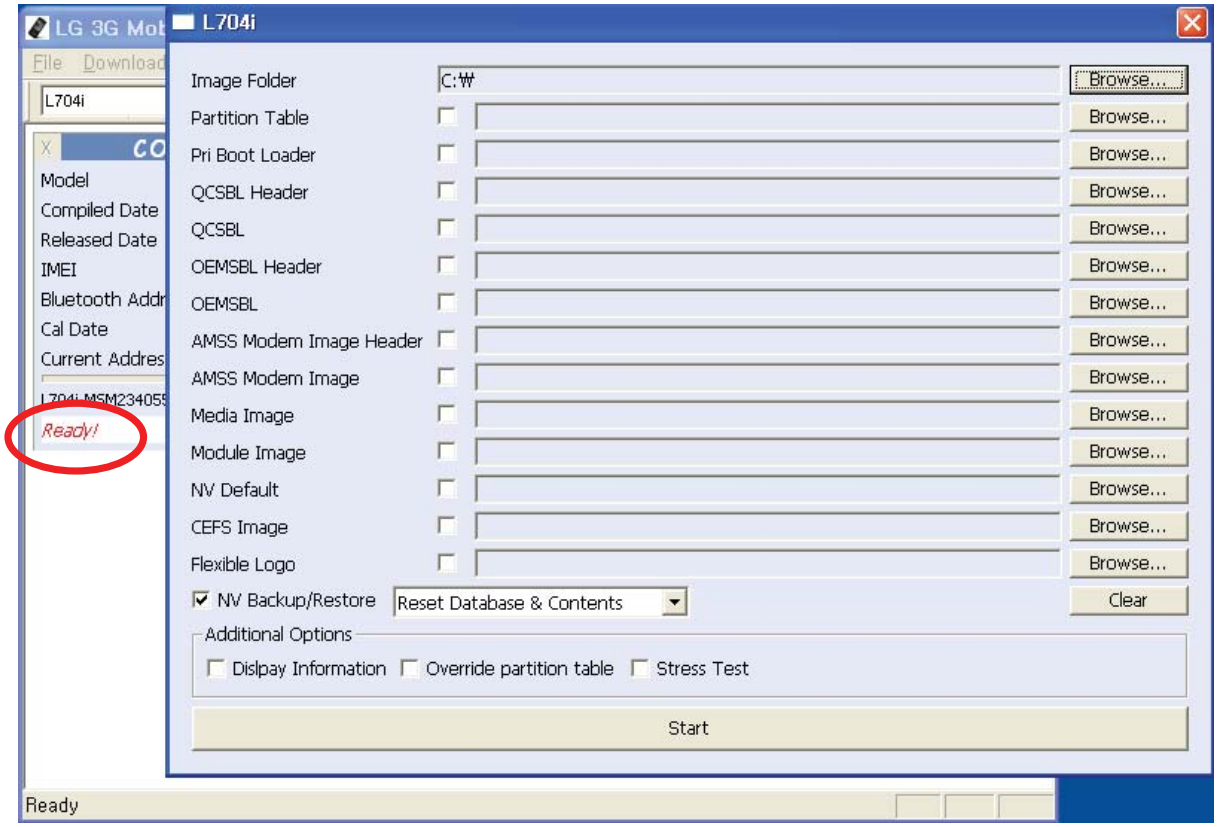

Copyright © 2009 LG Electronics. Inc. All right reserved.
Only for training and service purposes

The following slide describes how to use or set options in detail.

(The model name shall be different from that of the model name in the snapshot.)

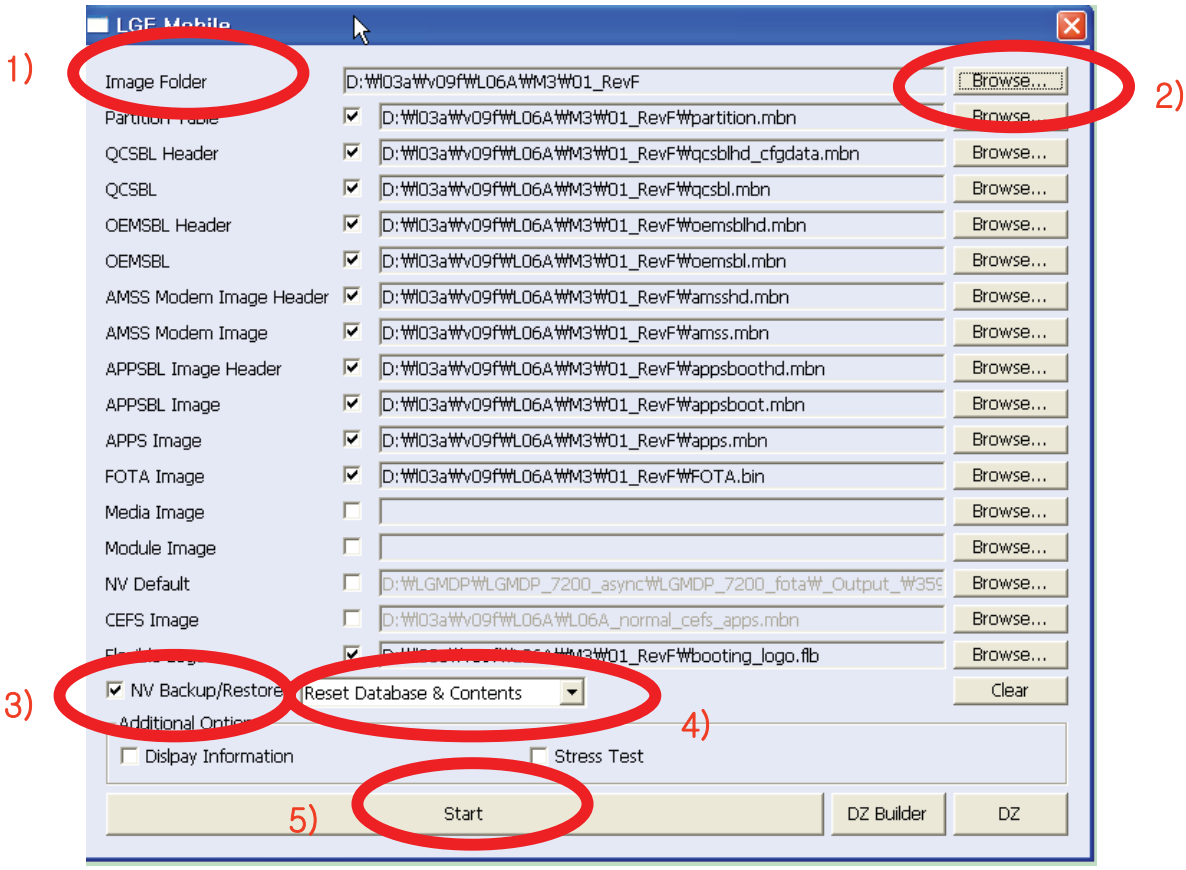

Copyright © 2009 LG Electronics. Inc. All right reserved.
Only for training and service purposes

LGE Internal Use Only

1) Image Folder indicates root path where all image files are placed. To change location of the default image path, select **Browse…** button. The edit box shows the file path where new images are located. Please note that all images should be located in a selected folder.
(This program support the automatically loading image for some models based on MSM6275 or MSM6280)

2) Click on the **Browse…** button to select image files to be downloaded on the handset.

3) NV Backup/Restore: NV Backup/Restore always have to be done, and it is default selected option.
Backup the NV data and restore the backed up NV data automatically.

4) Reset database & Contents: User related data including the setting data on the EFS is reset in the handset. The contents in the handset will be erased.
Erase_EFS: The calibration data, user contents, media, and module are erased. Only calibration data is kept when NV backup/restore is checked.
Keep All Contents: Maintain user data including WAP, AD, DRM, Email, Play lists, images When downloading a new images, user data stated above are maintained if this option is enable.

5) Start : Starting downloading the selected individual image.

Copyright © 2009 LG Electronics. Inc. All right reserved.
Only for training and service purposes

2) Choosing image files

Select the image folder, where all the image files are located, by clicking on the **Browse…** button.
(The folder name shall be different from that of the folder name in the snapshot. The folder name indicates the path where the image files are located.)

★if you select the image folder, the program will automatically load images accordingly.

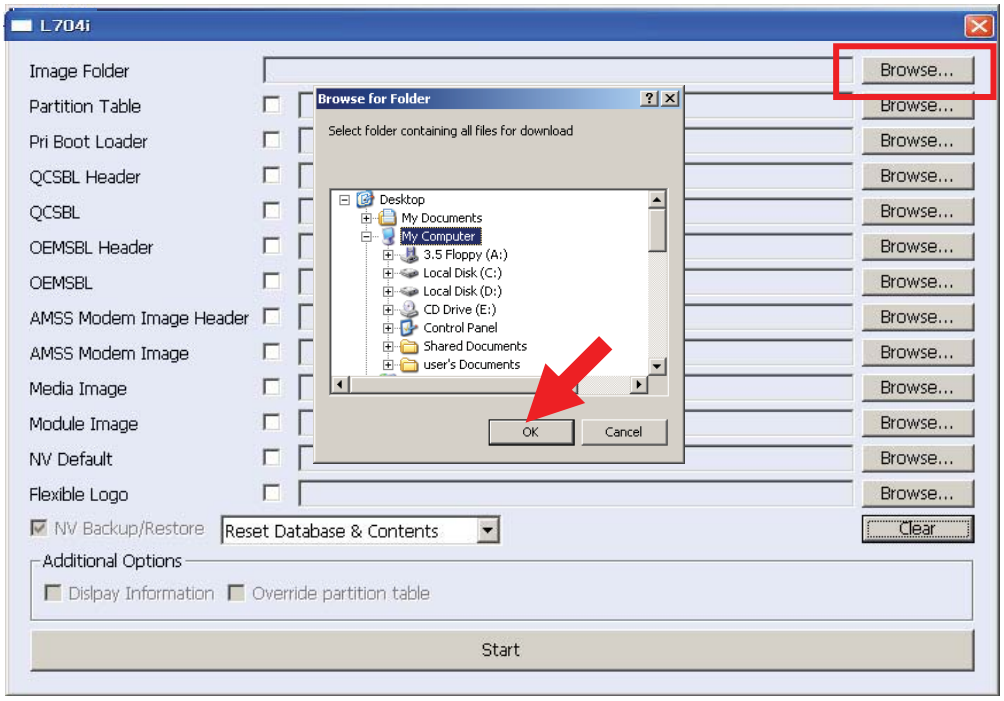

Copyright © 2009 LG Electronics. Inc. All right reserved.
Only for training and service purposes

LGE Internal Use Only

★ *if you select the image folder, the program will automatically load images accordingly.*

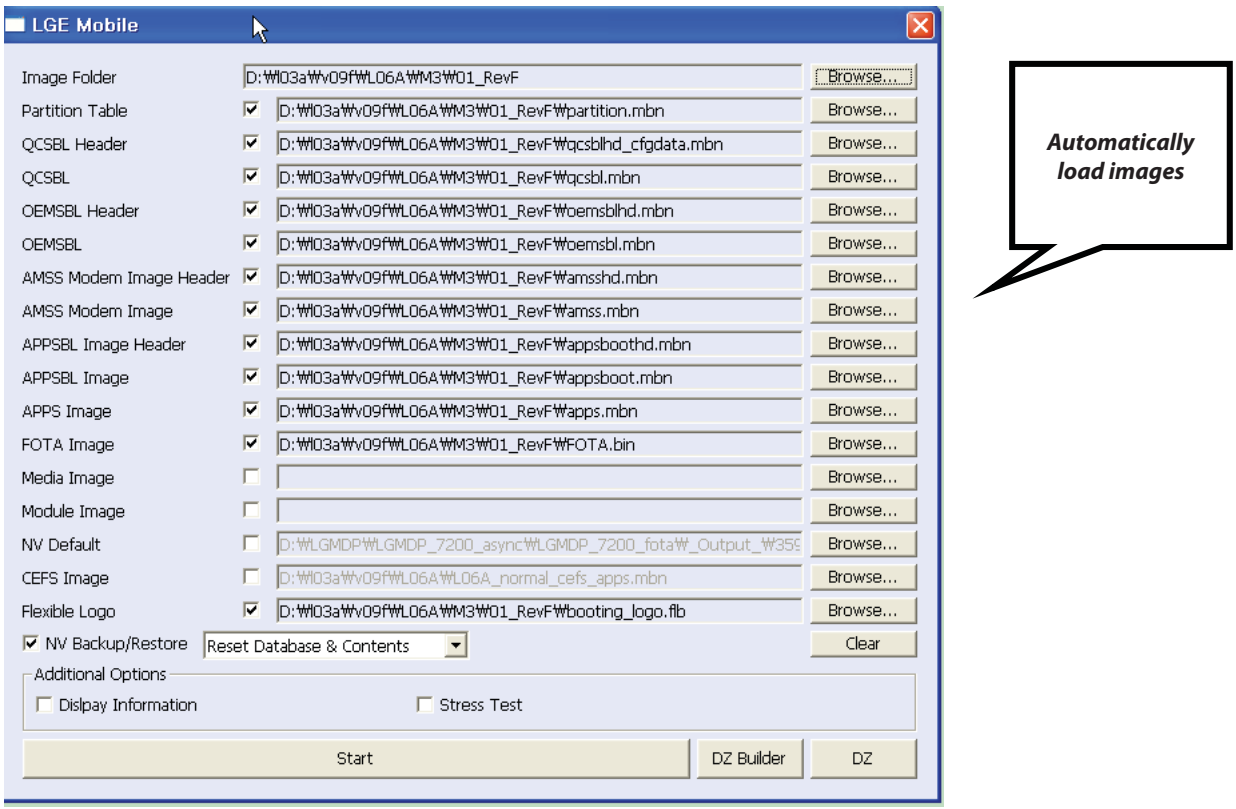

Copyright © 2009 LG Electronics. Inc. All right reserved.
Only for training and service purposes

If NV restore is failed, then the NV Data(*.nv2) is erased permantly. In this case, choose the desired NV file to be downloaded on the handset. To enable this simply check the box or select the NV file from the LGMDP installation directory by clicking on the **Browse…**button.

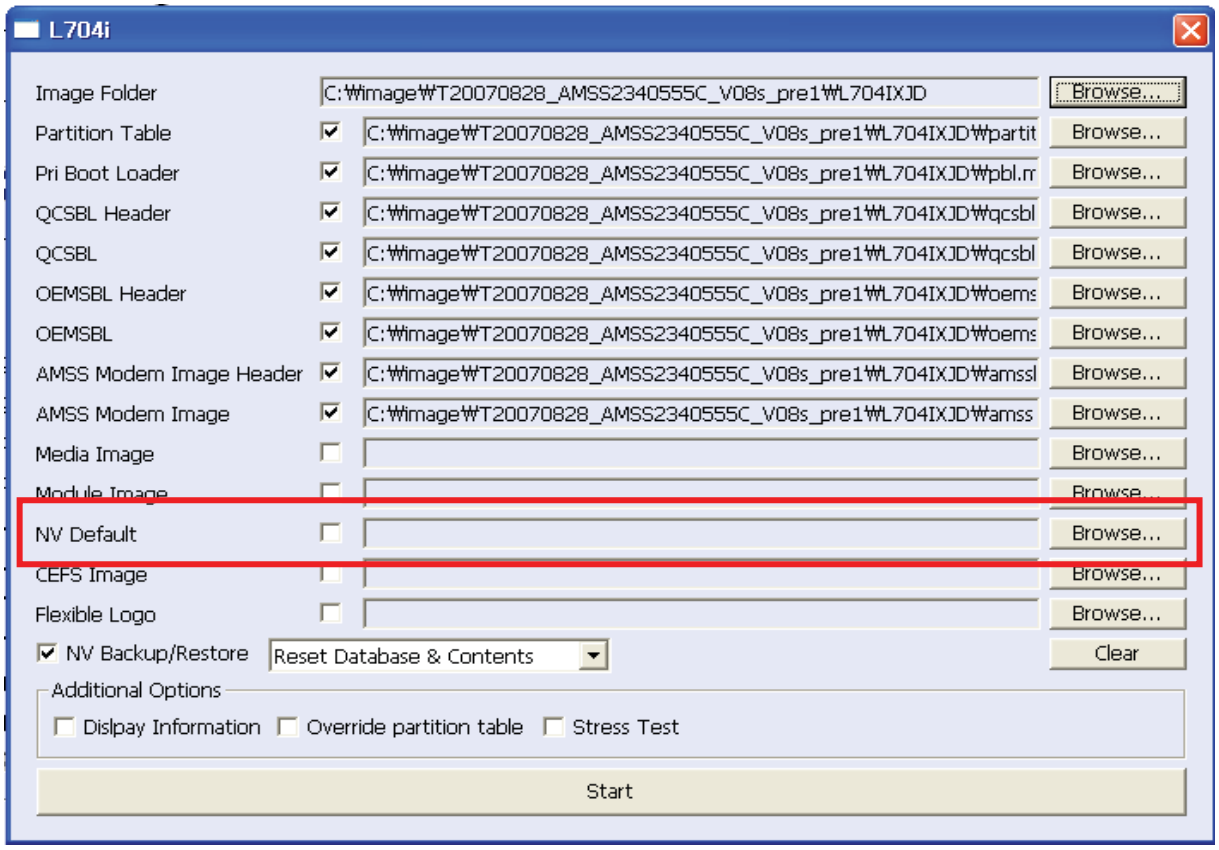

Click on the **START** button to start downloading.

Normally LGMDP will downloaded all files that need downloading. To download selected image file only simply select the image file that user want to process downloading.

Copyright © 2009 LG Electronics. Inc. All right reserved.
Only for training and service purposes

LGE Internal Use Only

3) Downloading

The following flow chart is whole process for downloading images to the handset. You will see snapshots for each step in the succeeding slides.

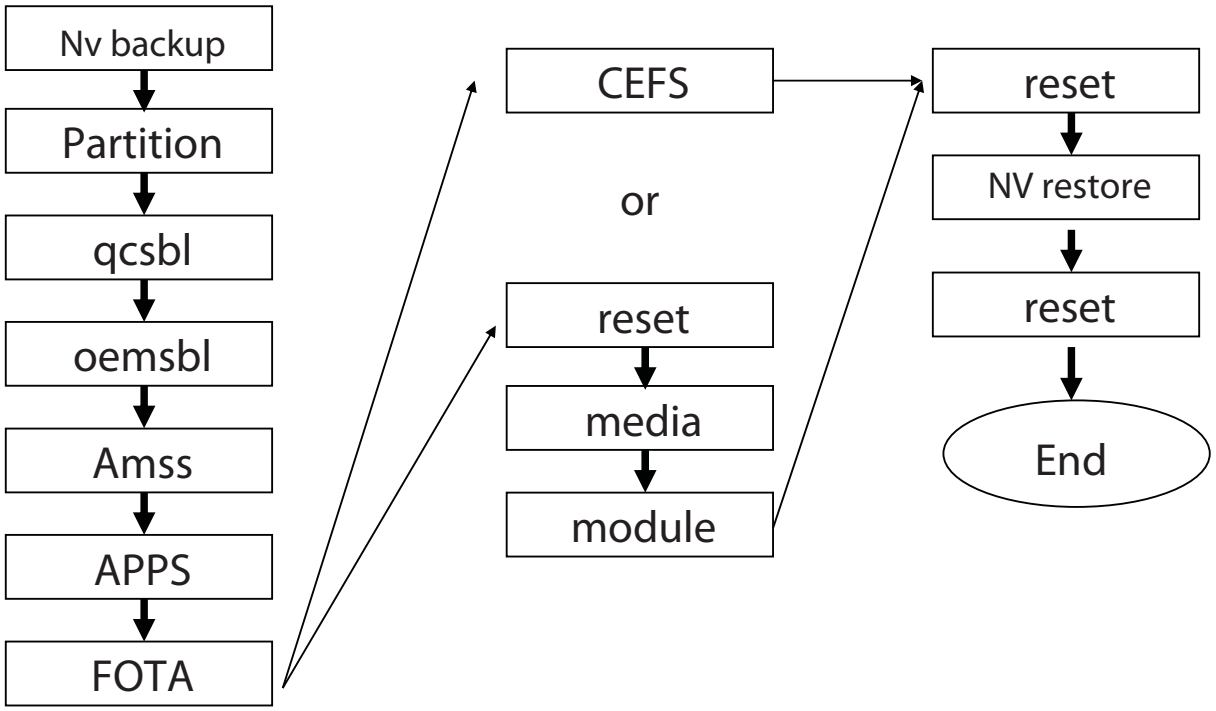

Copyright © 2009 LG Electronics. Inc. All right reserved.
Only for training and service purposes

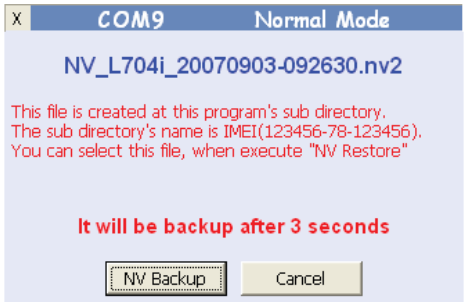

- This message box informs that a new file for NV backup will be created in the displayed file name in the LGMDP installation directory.

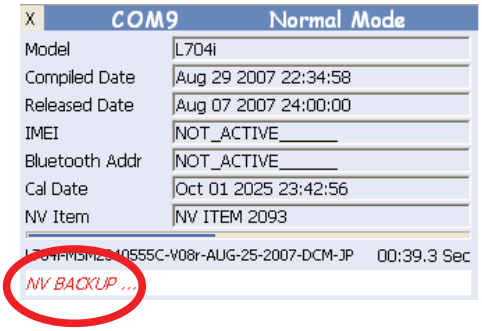

- Backing up NV data and backed up NV data will be stored in the LGMDP installation directory.

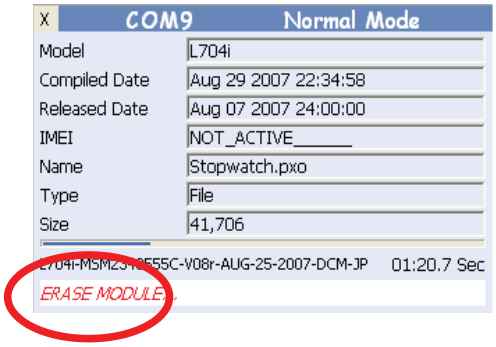

- Erasing the existing directories and files before the Module image is downloaded.

Copyright © 2009 LG Electronics. Inc. All right reserved.
Only for training and service purposes

LGE Internal Use Only

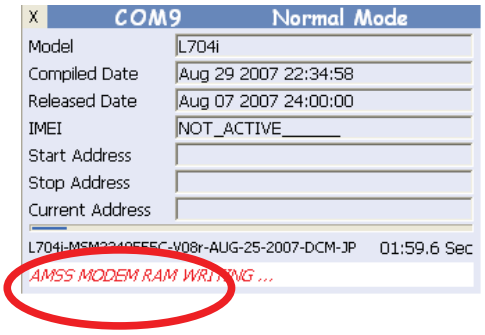

- Downloading the AMSS modem image

- Rebooting the handset and re-establishing the connection

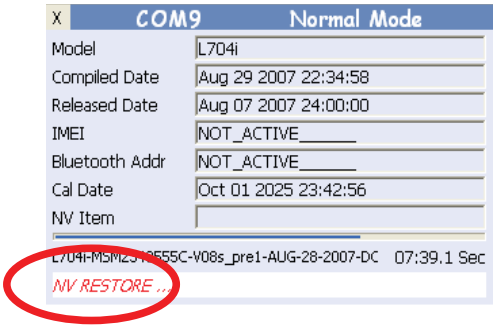

- Restoring NV data which backed up in the Backing up process. User can also restore NV data using NV Default image selection.

Copyright © 2009 LG Electronics. Inc. All right reserved.
Only for training and service purposes

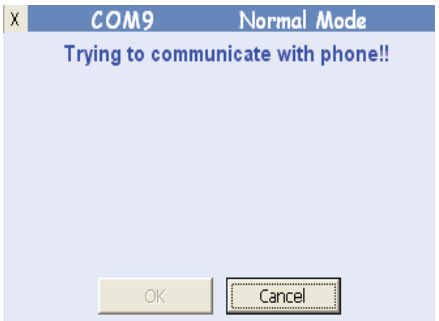

- Rebooting the handset and re-establishing the connection

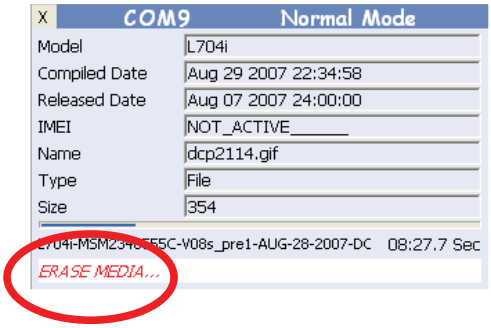

- Erasing the existing directories and files before downloading the selected Media image.

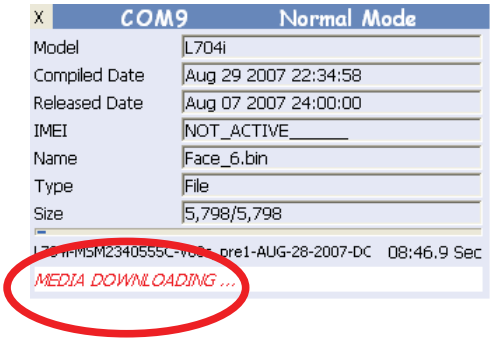

- Downloading Media image in progress

Copyright © 2009 LG Electronics. Inc. All right reserved.
Only for training and service purposes

LGE Internal Use Only

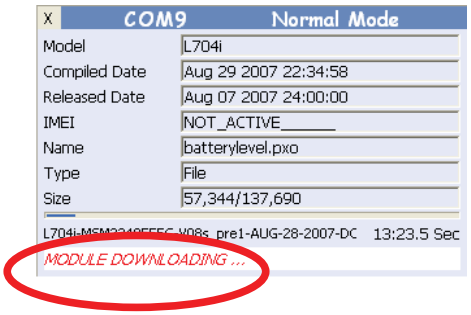

- Downloading Module image in progress

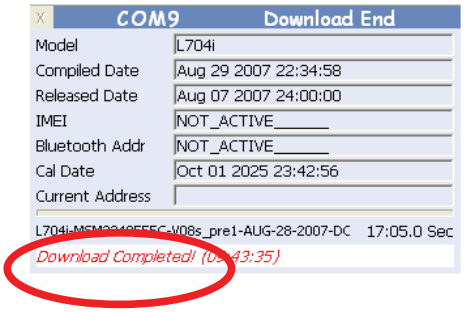

- Downloading process has completed successfully

Copyright © 2009 LG Electronics. Inc. All right reserved.
Only for training and service purposes

4) Tools

Device Manager allows to monitor current hardware that is installed on your PC.

Device Manager is designed to monitor USB connectivity and check where the COM has been installed . Select Device Manager from the Tools of the file menu.

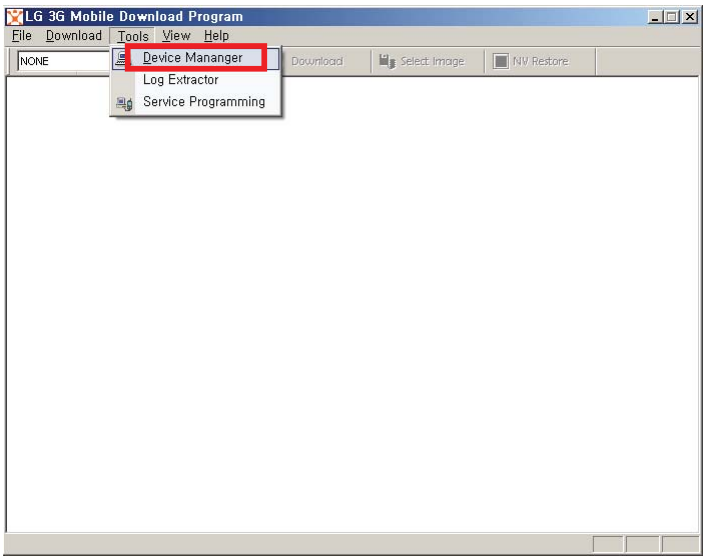

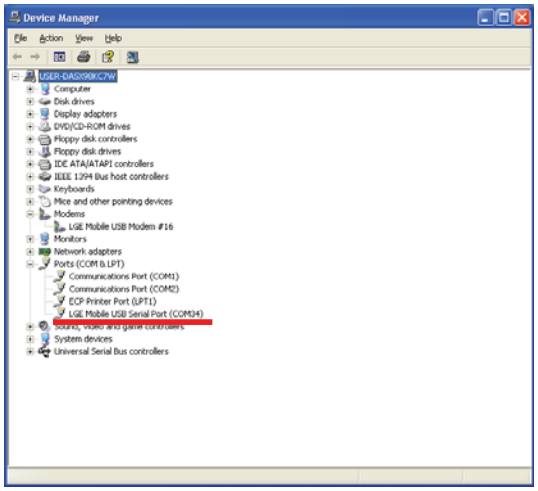

Copyright © 2009 LG Electronics. Inc. All right reserved.
Only for training and service purposes

LGE Internal Use Only

Log Extractor is designed to extract log information from handset and store log related files in the selected root path in PC. This function is very useful for debugging. Select Log Extractor from the Tools of the file menu, and connect the phone with LGMDP by clicking on the Connect button. When clicking on the Connect button, this checks if the appropriate files such as LFAPP/RecMngr.bin, err directory, Debugging_Tip.txt, or Hidden_info.bin are placed on the handset. If they are exist, then appropriate check boxes are checked accordingly. Select directory to store log files by clicking on the …button.

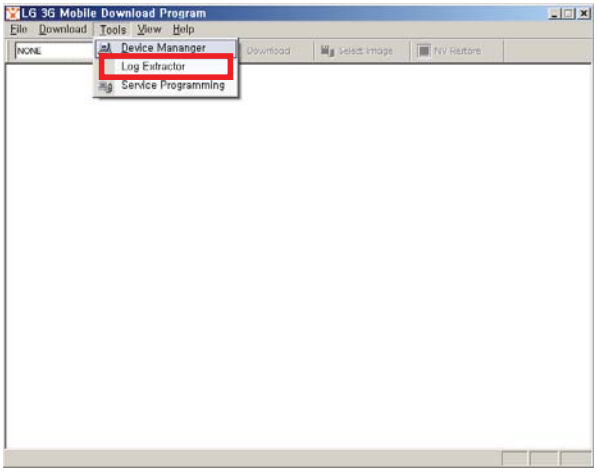

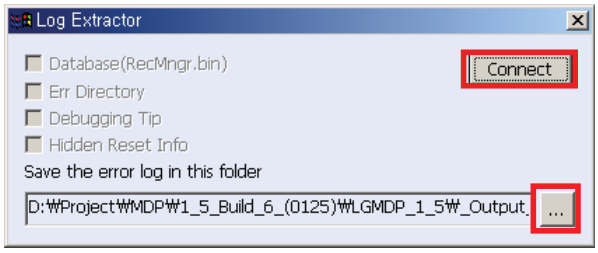

Copyright © 2009 LG Electronics. Inc. All right reserved.
Only for training and service purposes

5.3 Troubleshooting Download Errors

NV Restore Error

When you meet the "NV Restore error",

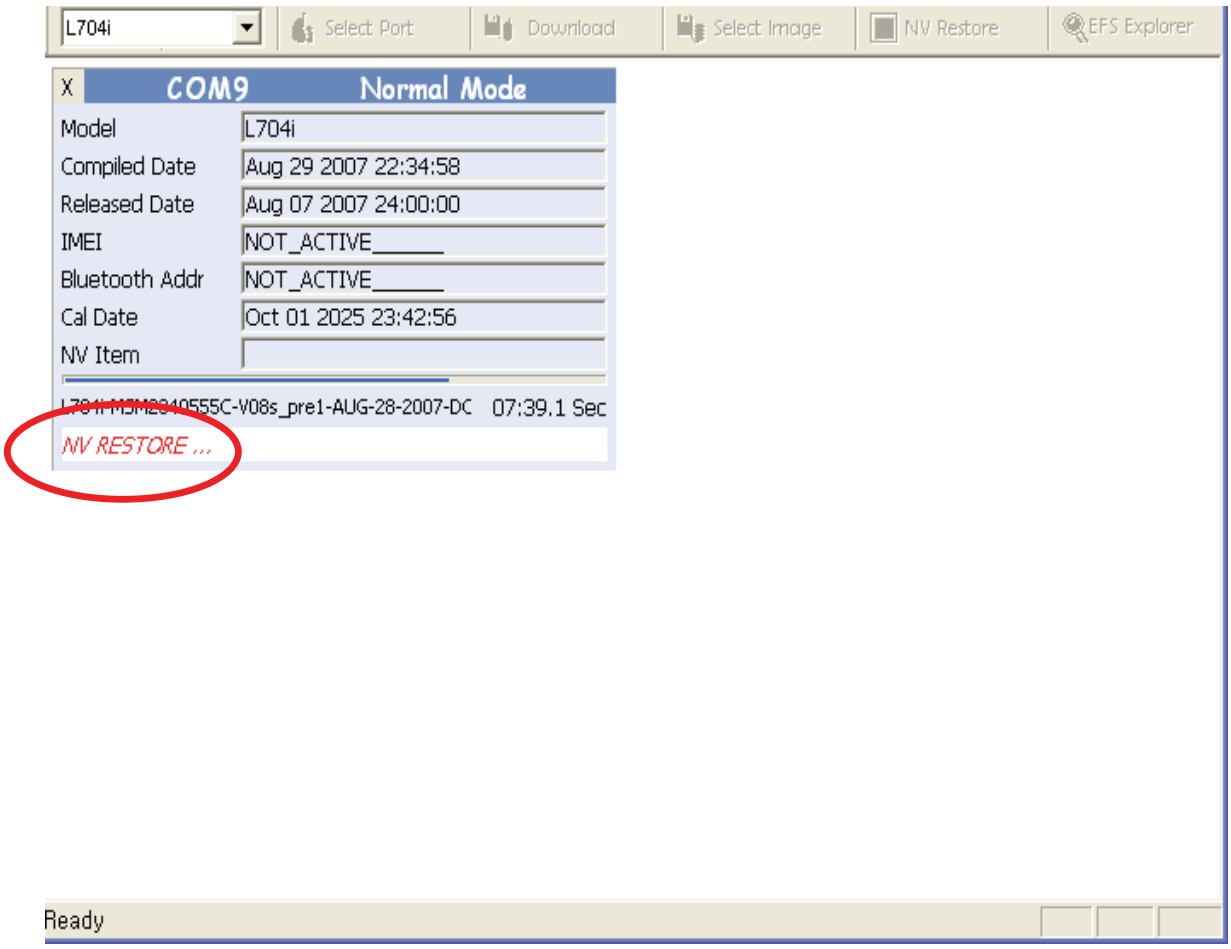

Copyright © 2009 LG Electronics. Inc. All right reserved.
Only for training and service purposes

LGE Internal Use Only

→ Connect to the phone.

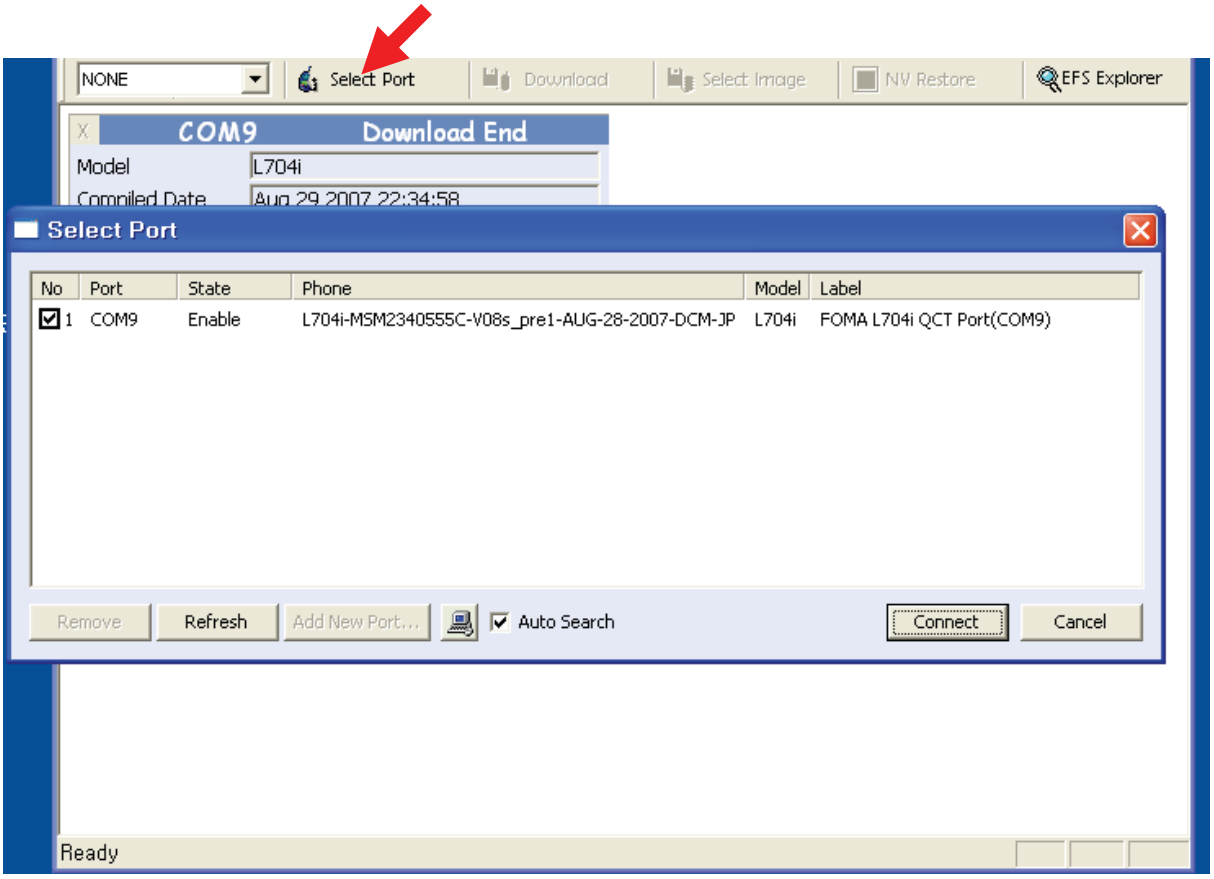

Copyright © 2009 LG Electronics. Inc. All right reserved.
Only for training and service purposes

→ Click on 'Cancel'.

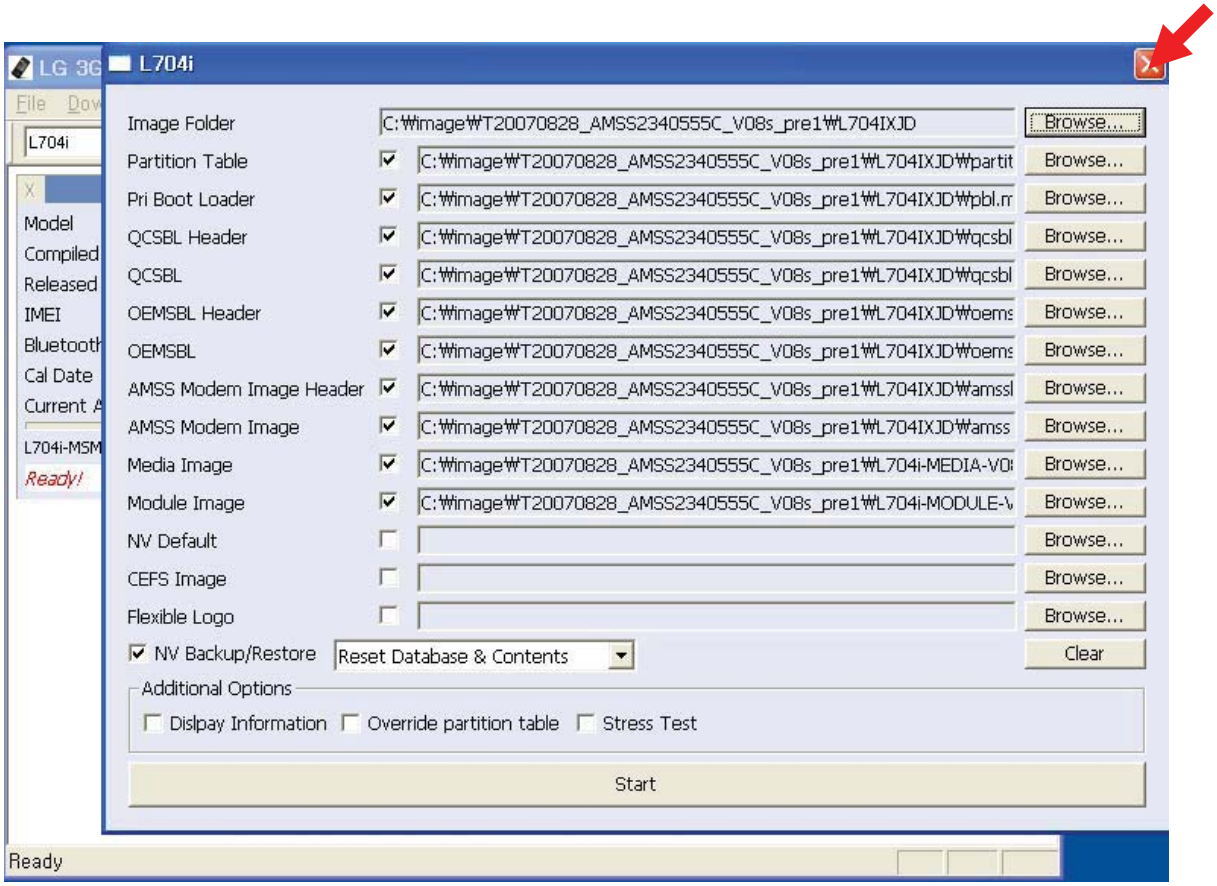

Copyright © 2009 LG Electronics. Inc. All right reserved.
Only for training and service purposes

LGE Internal Use Only

→ Click on 'NV Restore' then several NV Backup files(*.nv2) are shown.

★ The files are saved every NV Backup. *The name is based on the time when NV Backup is done.)*

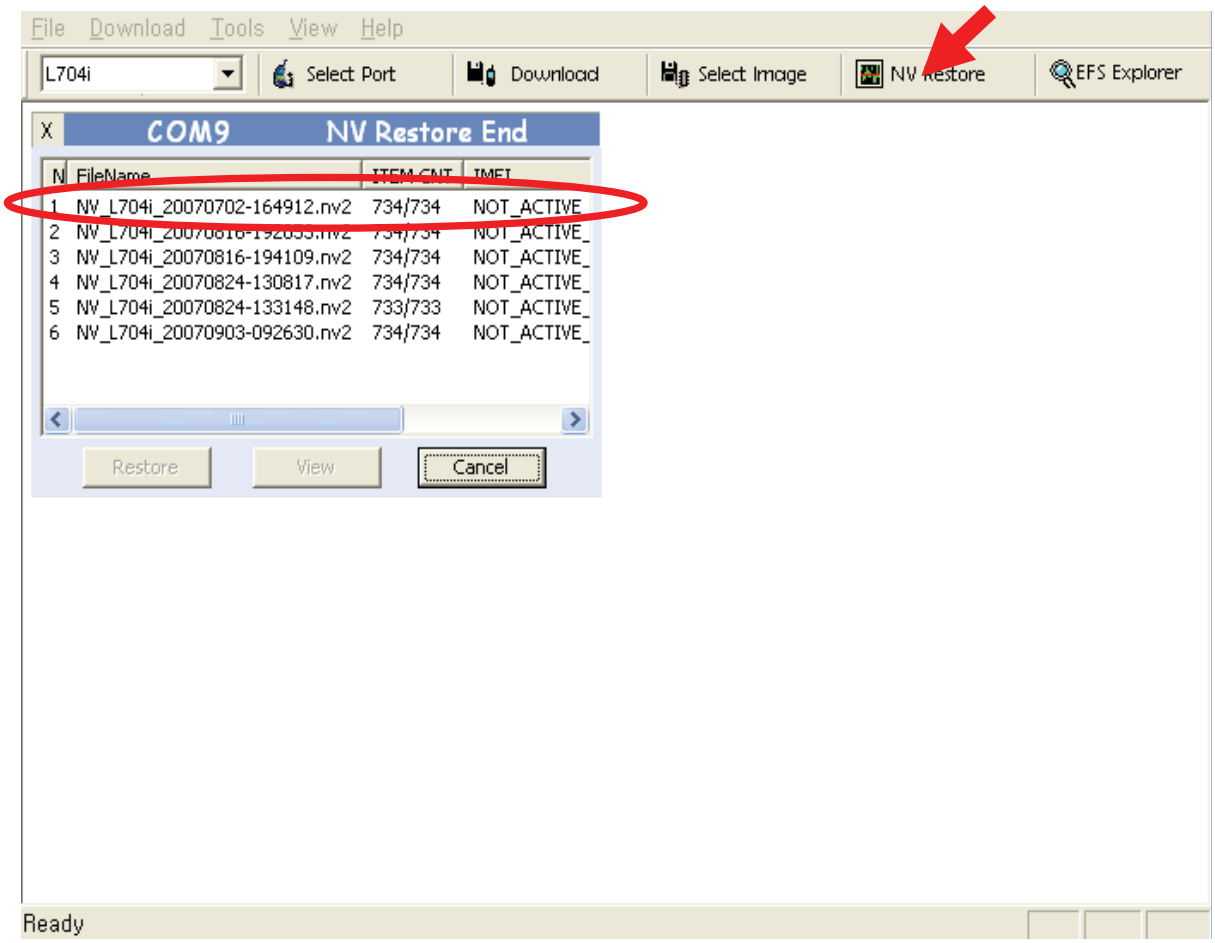

Copyright © 2009 LG Electronics. Inc. All right reserved.
Only for training and service purposes

→ Select the proper file and click on 'Restore'.

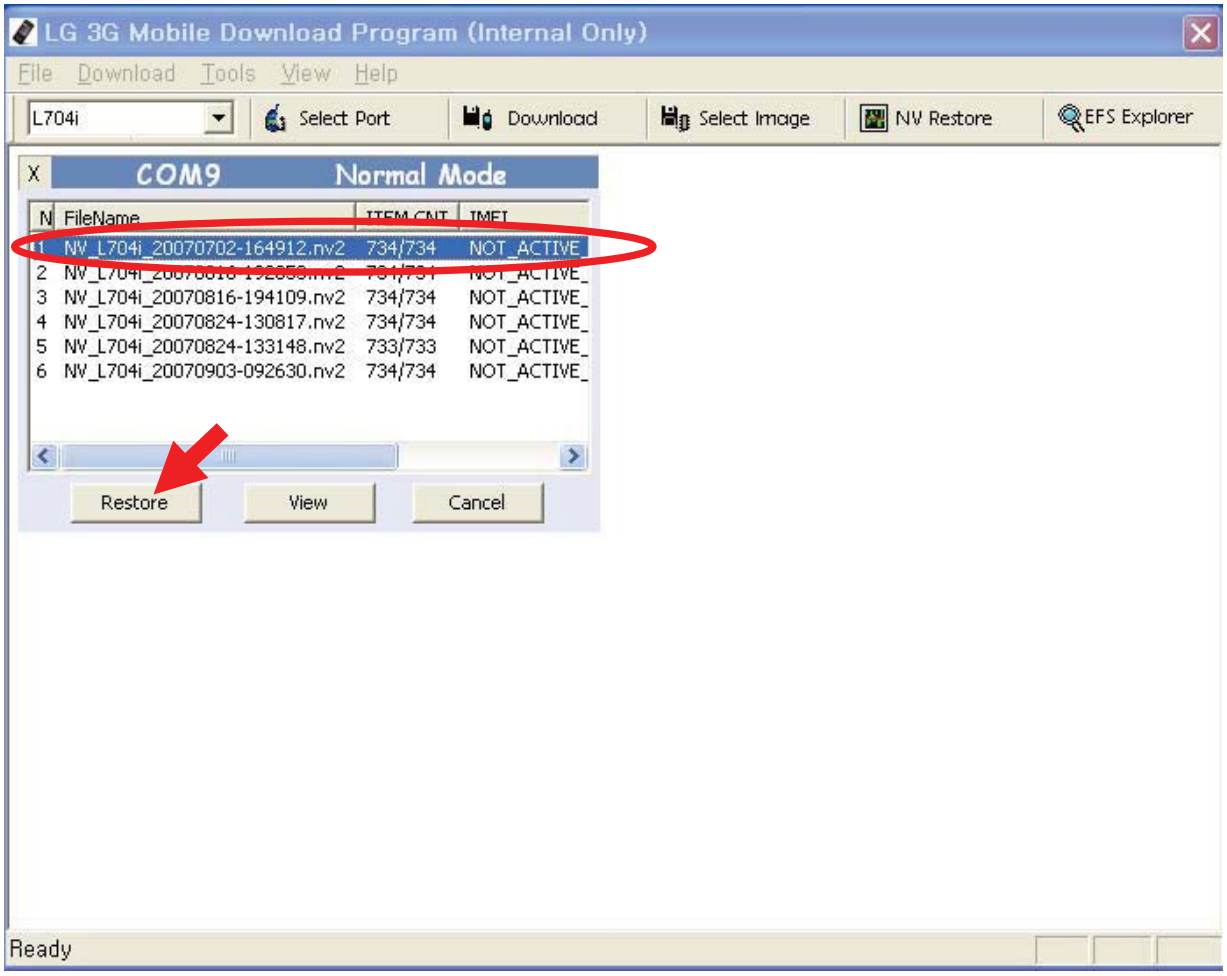

Copyright © 2009 LG Electronics. Inc. All right reserved.
Only for training and service purposes

LGE Internal Use Only

→ If you want image download and NV backup file restore at once, use the NV Default function.

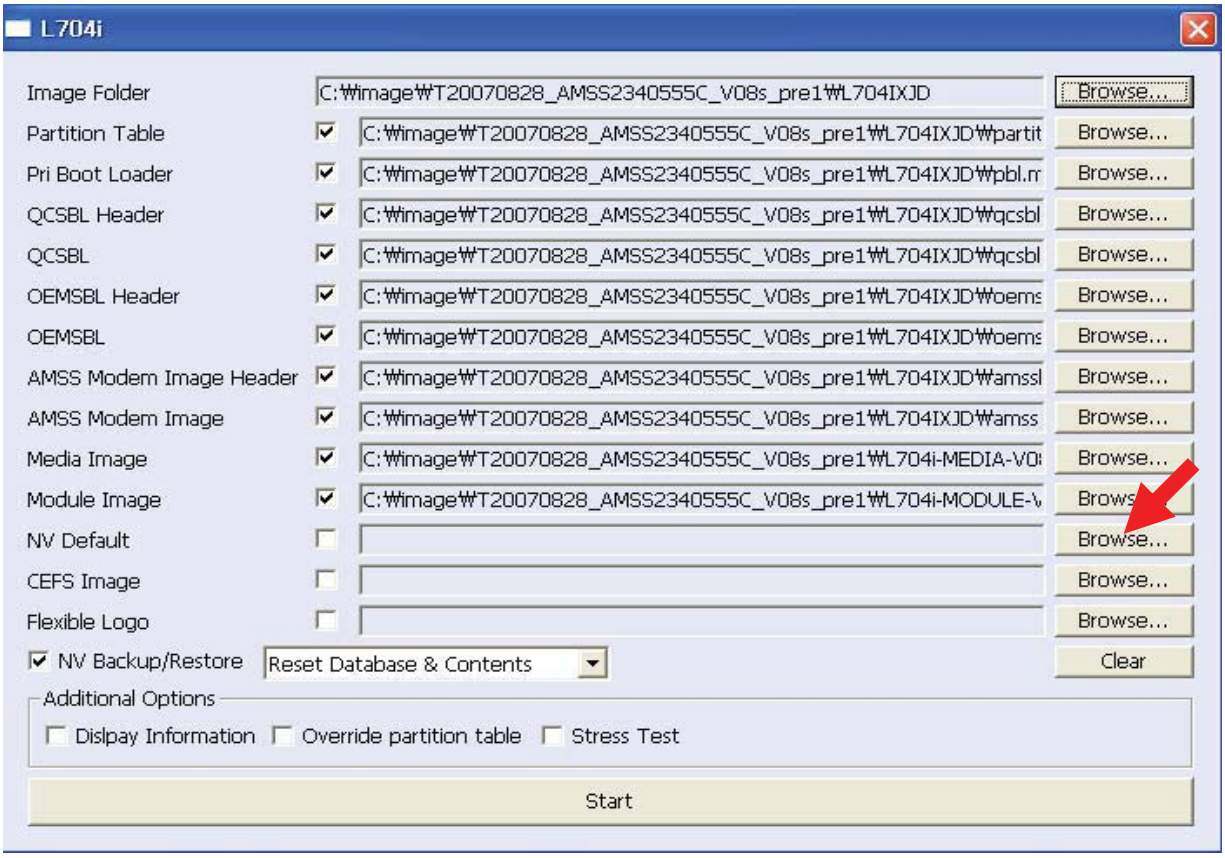

Copyright © 2009 LG Electronics. Inc. All right reserved.
Only for training and service purposes

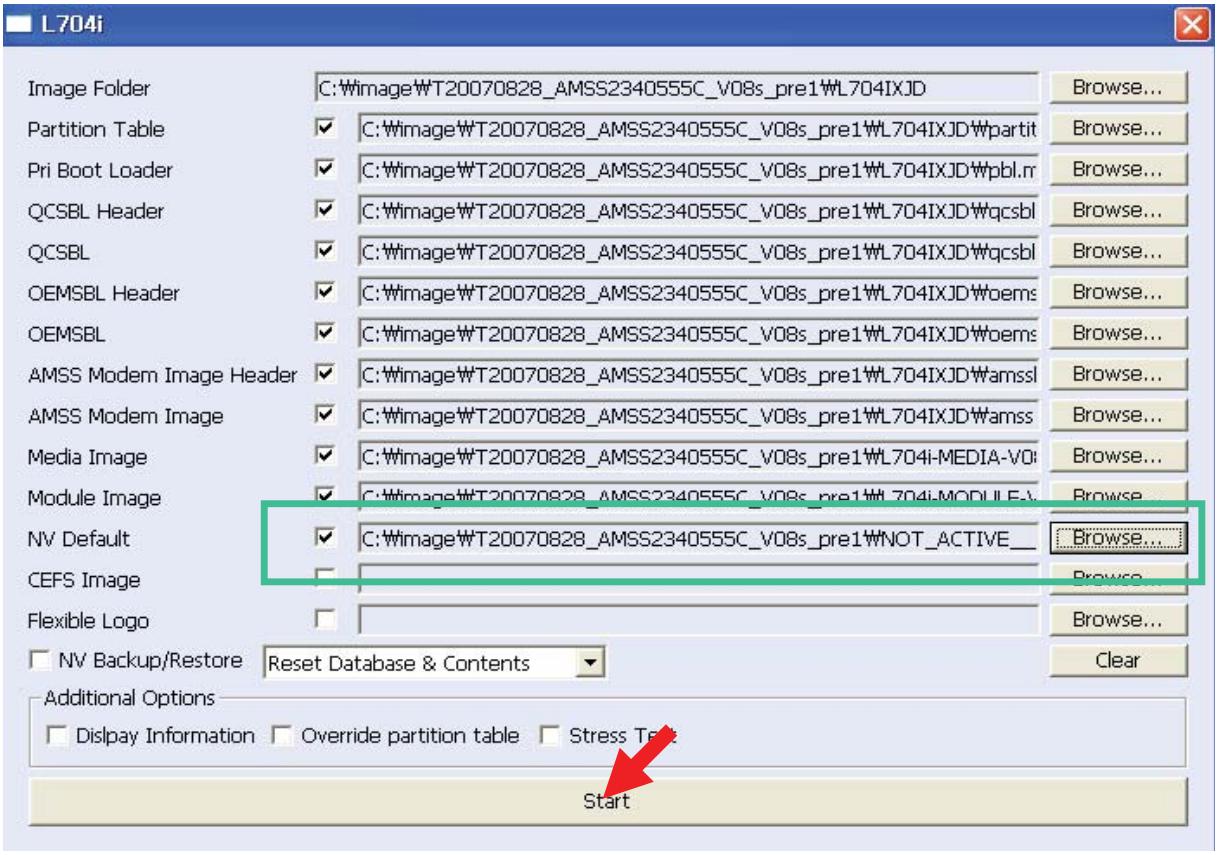

Copyright © 2009 LG Electronics. Inc. All right reserved.
Only for training and service purposes

LGE Internal Use Only

5.4 Caution

1) Multi-downloading using the USB hub is not recommendable.

2) If you see the message 'cal mode' after 'completing download', you must do NV restore and image (media and module) download.

3) In emergency mode, you can not download the media and module image. So if you want download media and module image, connect the phone normal mode after emergency mode download, and then you can do it.

4) The NV data saved at LGMDP folder like this.

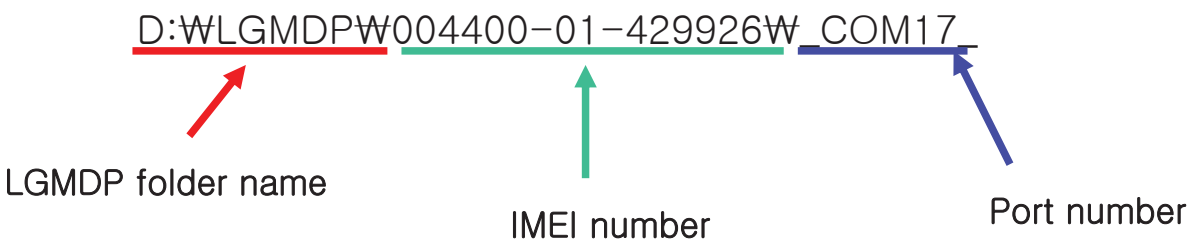

5) Recommended that the Module and Media Image have to be downloaded at the same time.

6) Erase EFS option will erase everything (media, module, nv items, and user data) in the EFS area.

Copyright © 2009 LG Electronics. Inc. All right reserved.
Only for training and service purposes

6. BLOCK DIAGRAM

6.1 GSM & UMTS RF Block

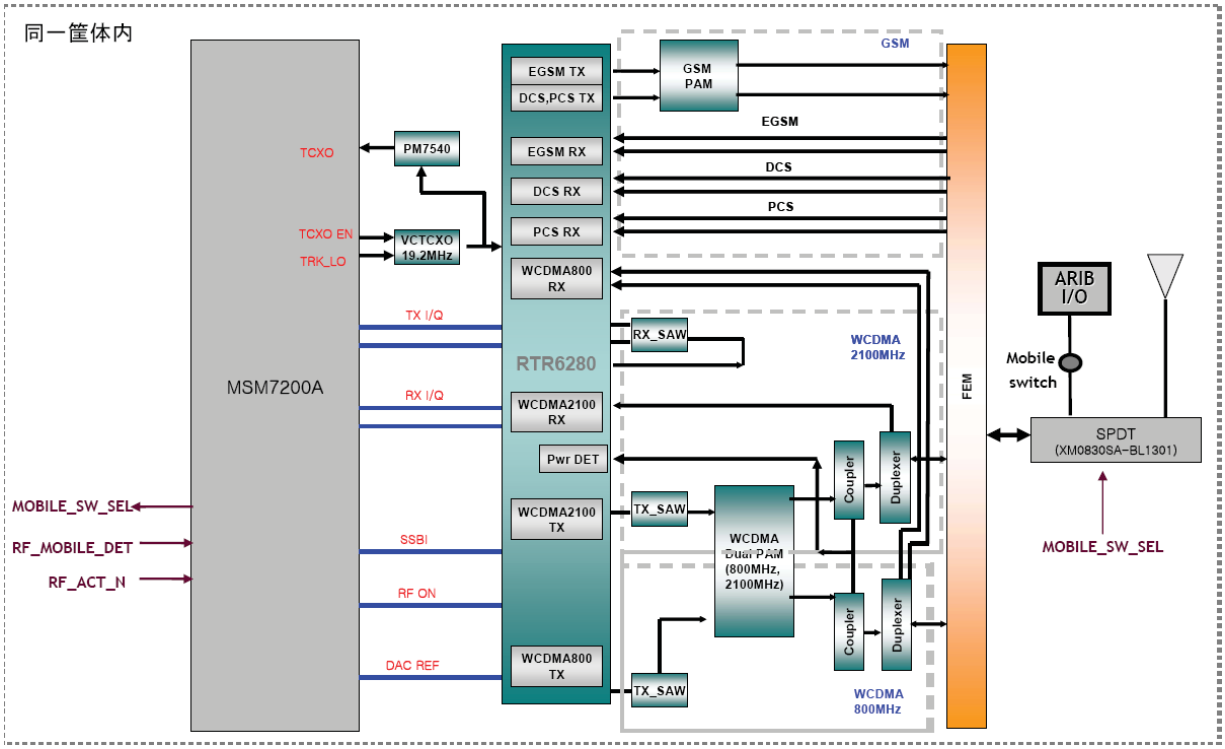

Fig 6.1-1 L-06A RF Functional Block Diagram

Copyright © 2009 LG Electronics. Inc. All right reserved.
Only for training and service purposes

LGE Internal Use Only

6.2 RF Component

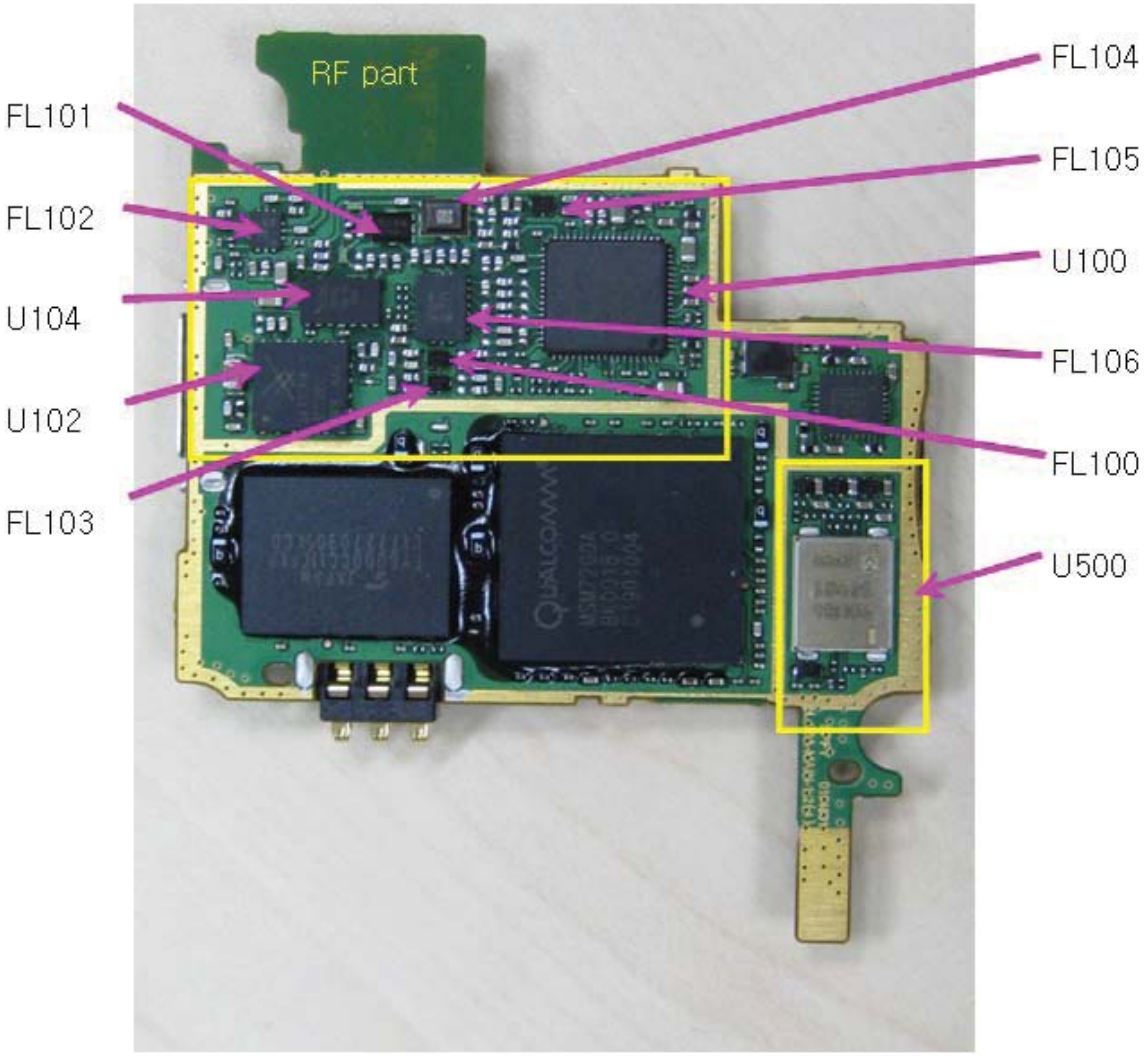

Copyright © 2009 LG Electronics. Inc. All right reserved.
Only for training and service purposes

Diagram	Ref. No	Part Name	Function	Comment
Common	U200	MSM7200A	Main Control	Main Chipset
	X400	CM315(12.5PF)	Sleep Clock	32.768KHz
	U400	PM7540	Power Control	Power Supply
	U300	TYB000CC11CFKP	Memory	4G/2G
	X100	TG-5010LH(19.2M)-75A	VCTCXO	19.2MHz
RF	SW100	KMS-506	Test Connector	Calibration etc
	FL102	XM0830SA-BL1301	SPDT Switch	RF Switch
	FL106	LMSP43QL-771	FEM	Band selection
	FL14	SAYFP1G95AA0B00	W2100 Duplexer	Tx / Rx
	U104	AWT6222R	W2100/800 PAM	Tx
	FL100	SAFEB1G95KA0F00	W2100 Tx SAW	Tx
	FL105	SAFEB2G14FA0F00	W2100 Rx SAW	Rx
	FL104	B7683	W800 Duplexer	Tx / Rx
	U102	SKY77318	GSM PAM	Tx
	U100	RTR6280	RF Transceiver	Tx / Rx
	FL103	SAFEB836MAL0F00	W800 Tx SAW	Tx

Copyright © 2009 LG Electronics. Inc. All right reserved.
Only for training and service purposes

LGE Internal Use Only

Total Block Diagram

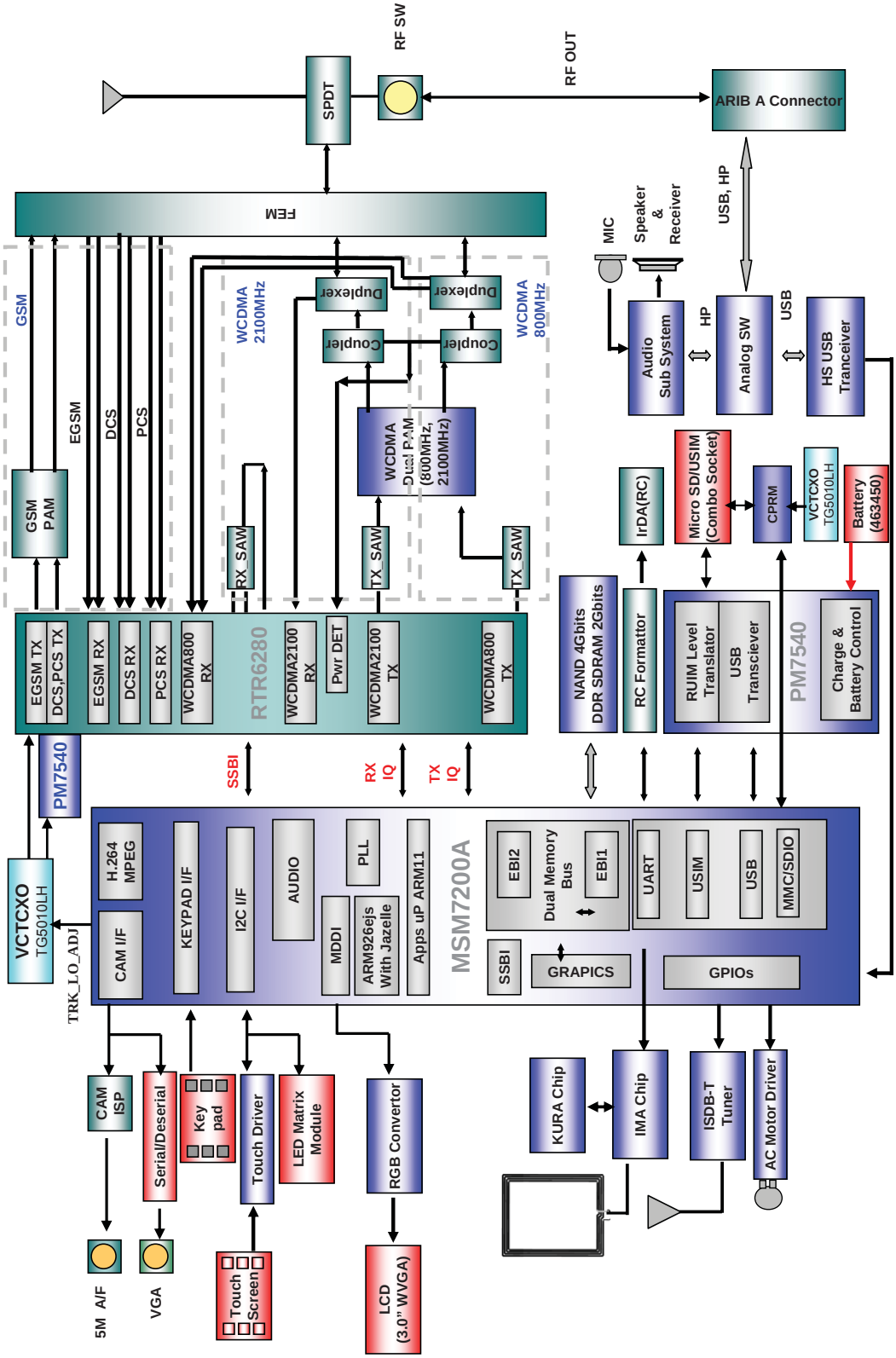

Copyright © 2009 LG Electronics. Inc. All right reserved.
Only for training and service purposes

Power Block

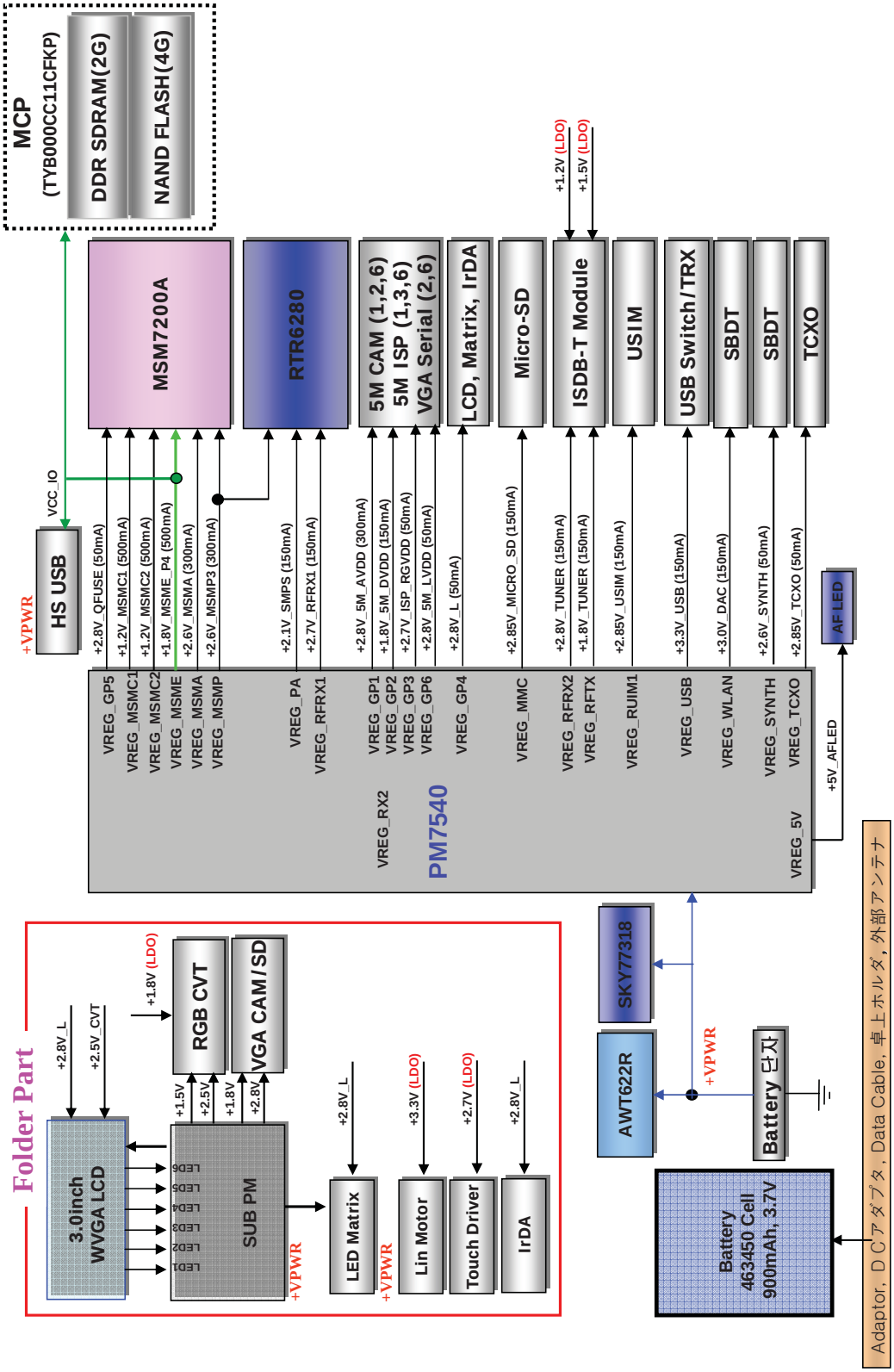

Copyright © 2009 LG Electronics. Inc. All right reserved.
Only for training and service purposes

LGE Internal Use Only

Block Diagram (Interface)

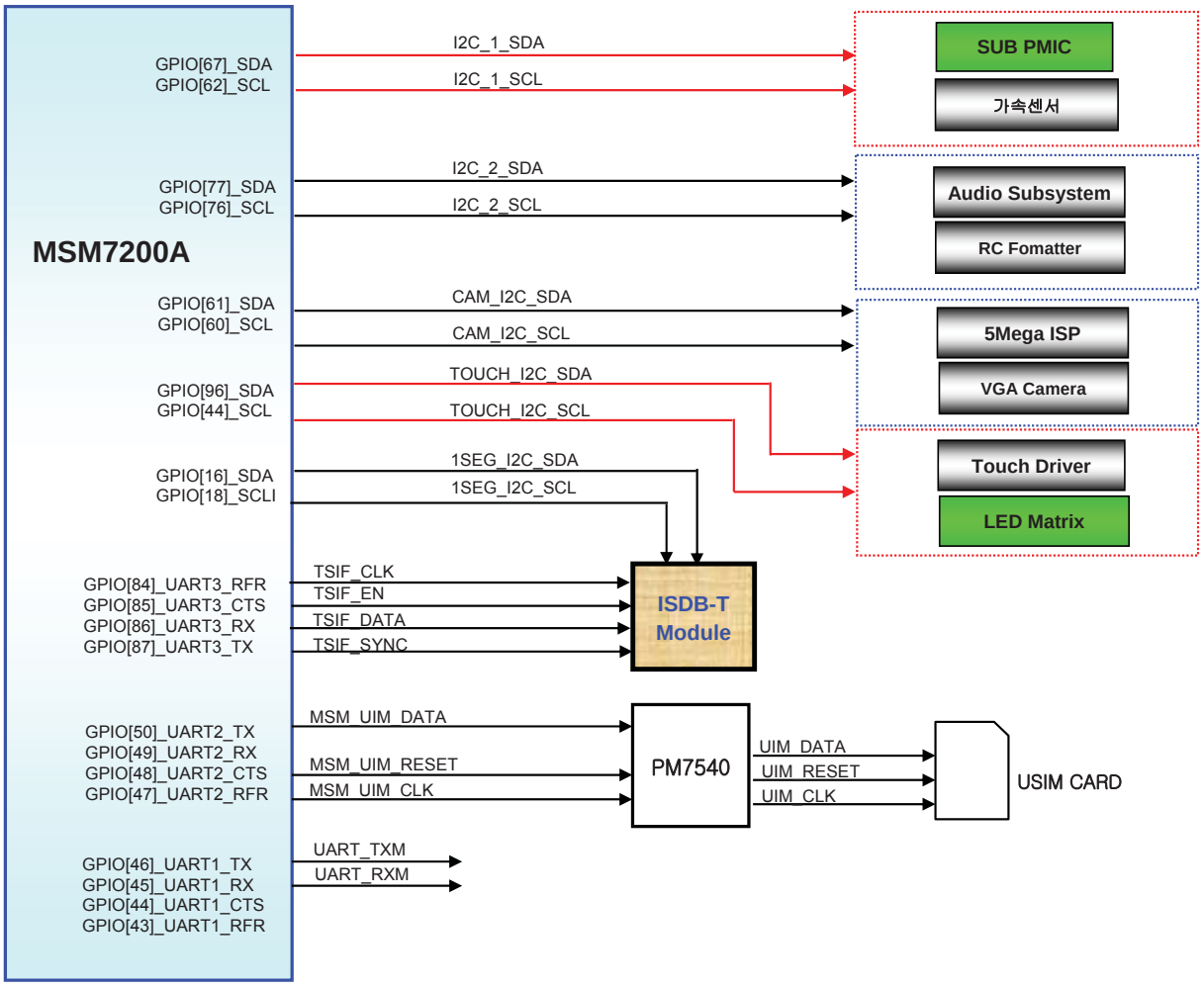

Copyright © 2009 LG Electronics. Inc. All right reserved.
Only for training and service purposes

SOUND & AUDIO

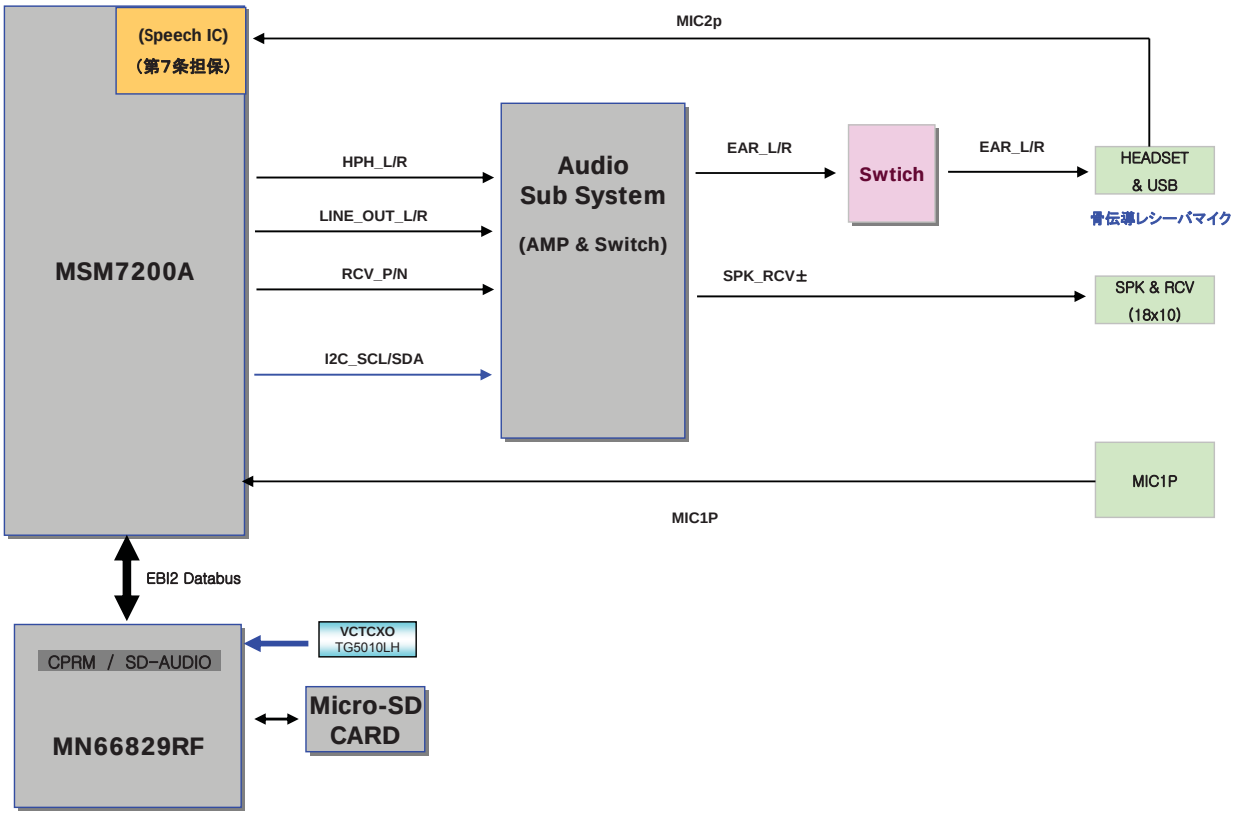

Copyright © 2009 LG Electronics. Inc. All right reserved.
Only for training and service purposes

LGE Internal Use Only

Copyright © 2009 LG Electronics. Inc. All right reserved.
Only for training and service purposes

7. CIRCUIT DIAGRAM

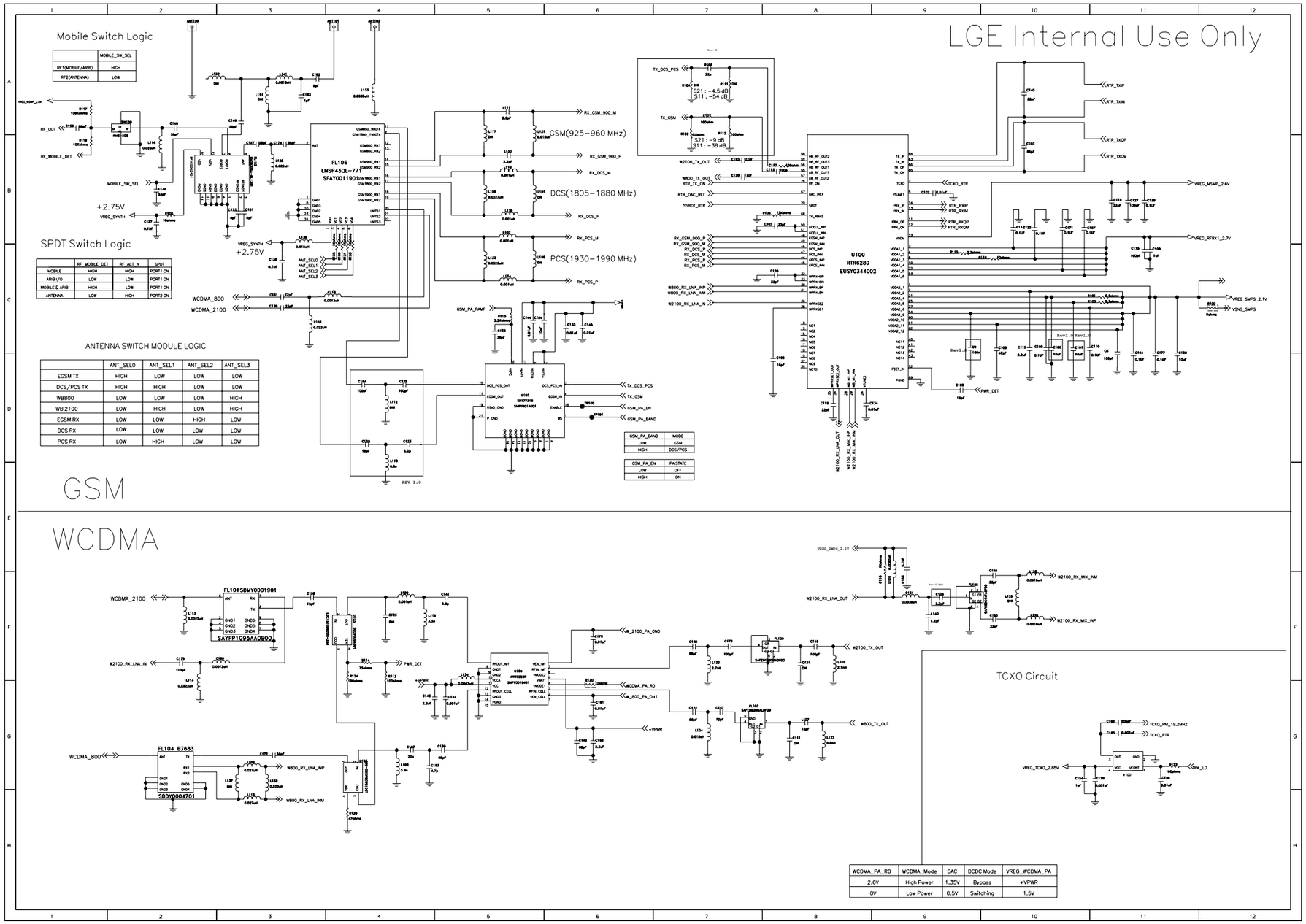

Copyright © 2009 LG Electronics. Inc. All right reserved.
Only for training and service purposes

7. CIRCUIT DIAGRAM

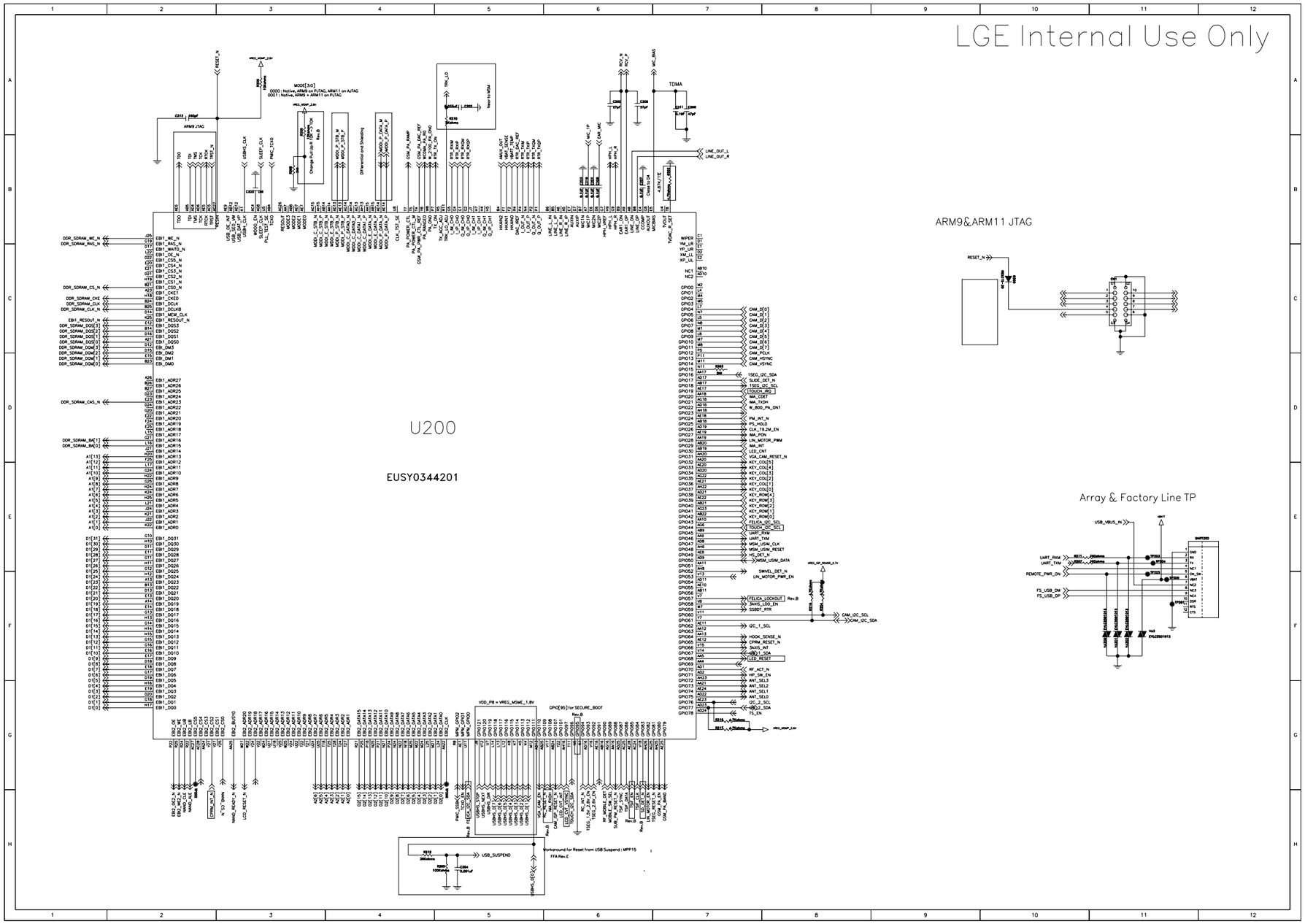

Copyright © 2009 LG Electronics. Inc. All right reserved.
Only for training and service purposes

7. CIRCUIT DIAGRAM

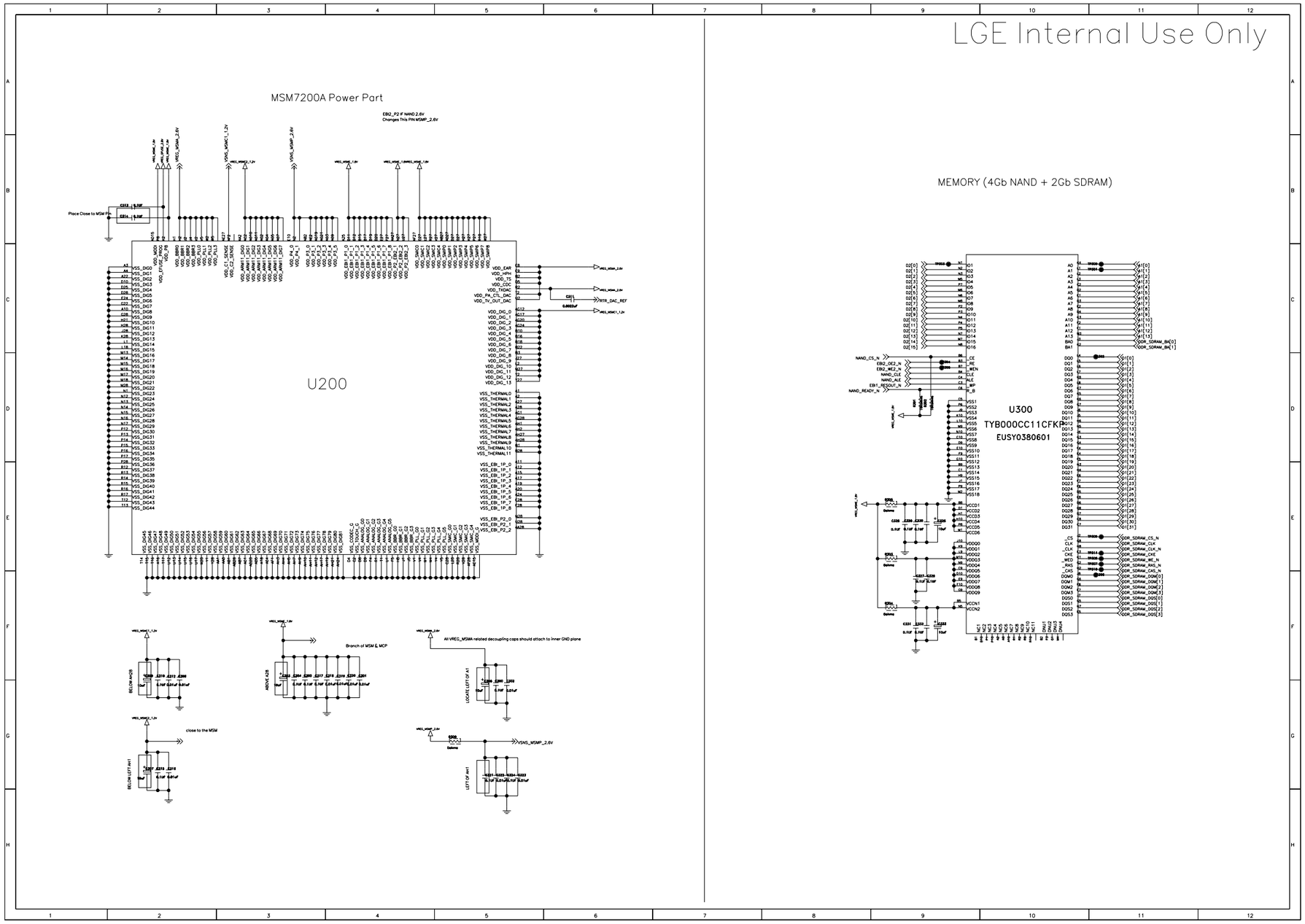

Copyright © 2009 LG Electronics. Inc. All right reserved.
Only for training and service purposes

LGE Internal Use Only

7. CIRCUIT DIAGRAM

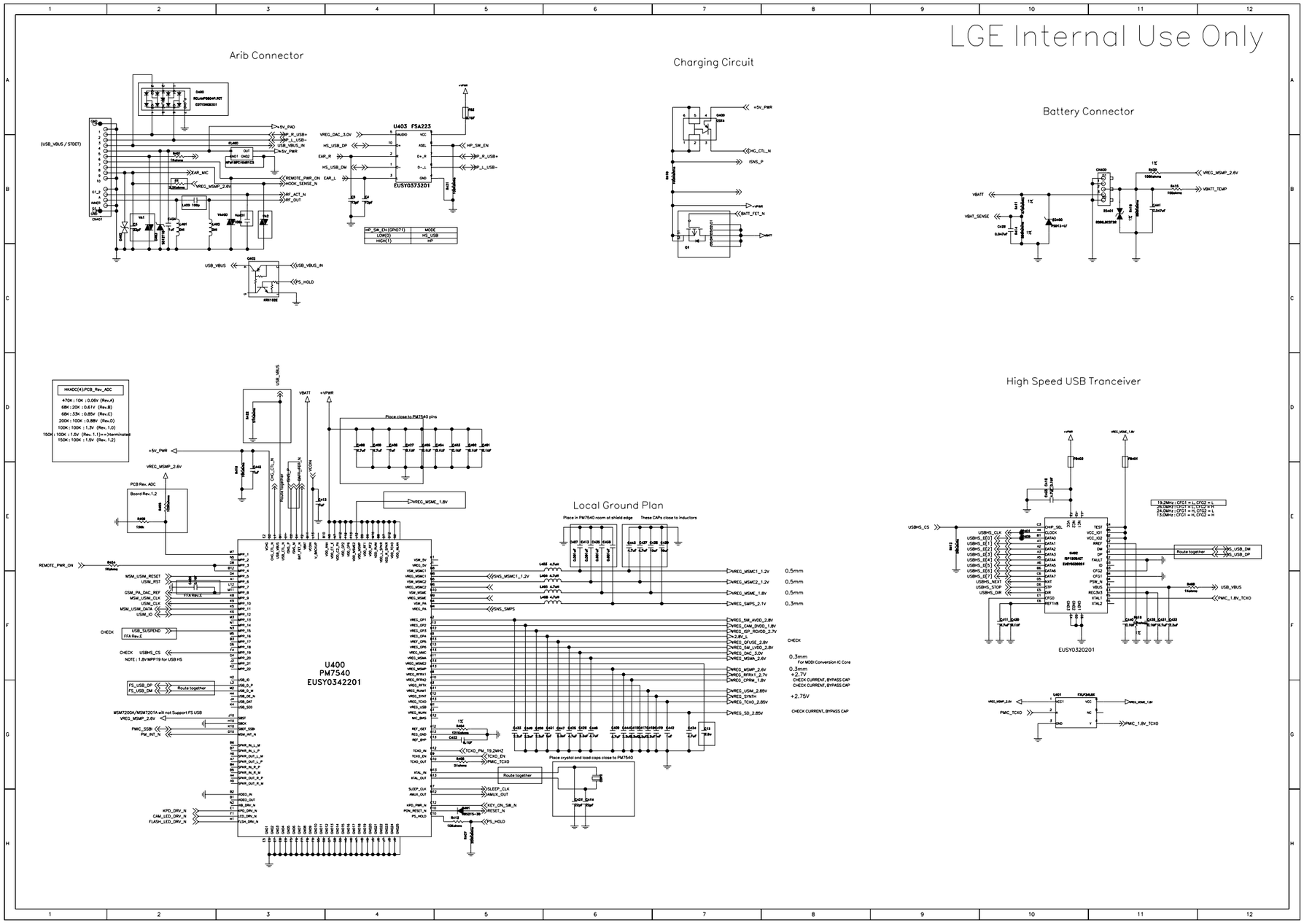

Copyright © 2009 LG Electronics. Inc. All right reserved.
Only for training and service purposes

7. CIRCUIT DIAGRAM

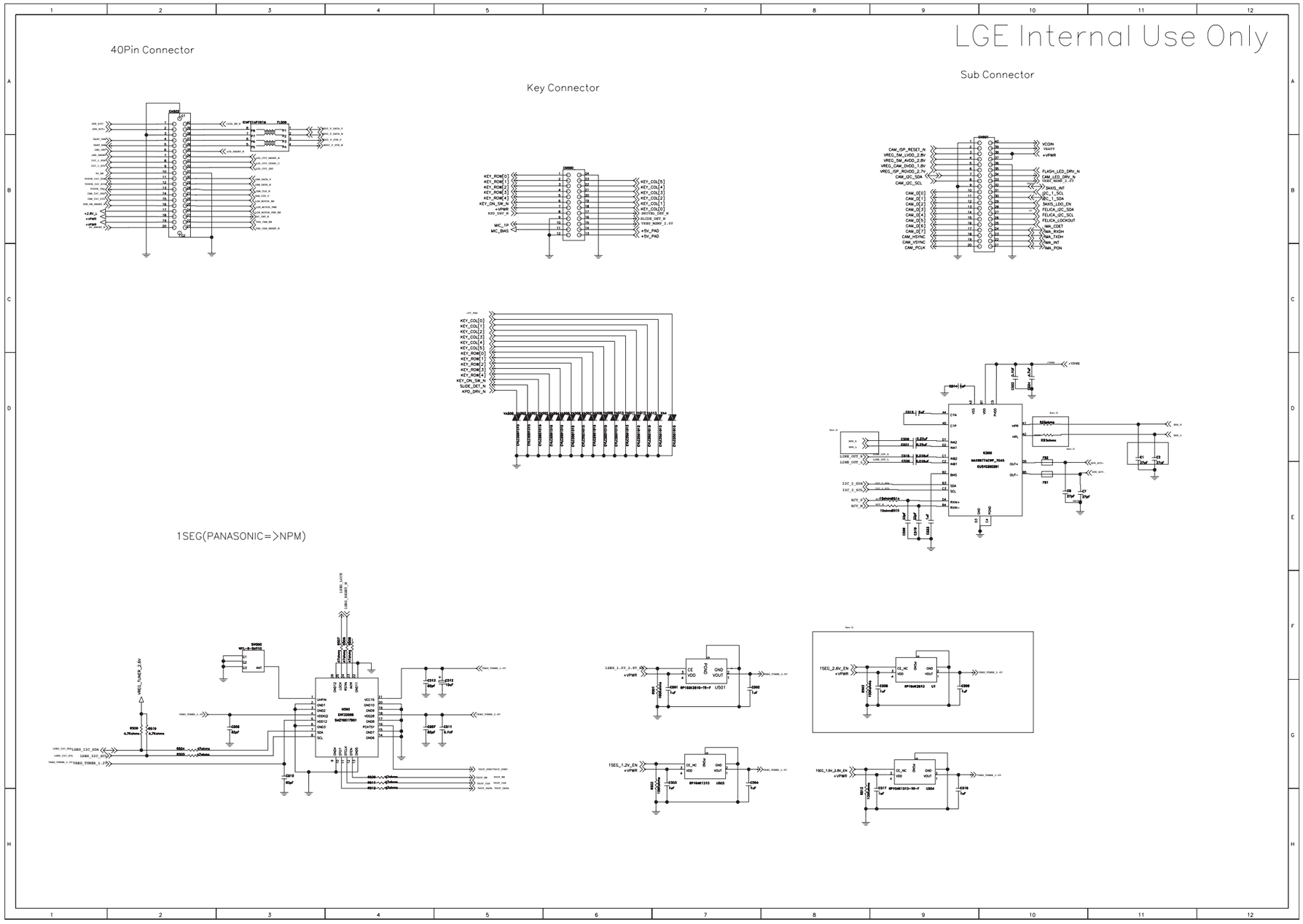

Copyright © 2009 LG Electronics. Inc. All right reserved.
Only for training and service purposes

LGE Internal Use Only

7. CIRCUIT DIAGRAM

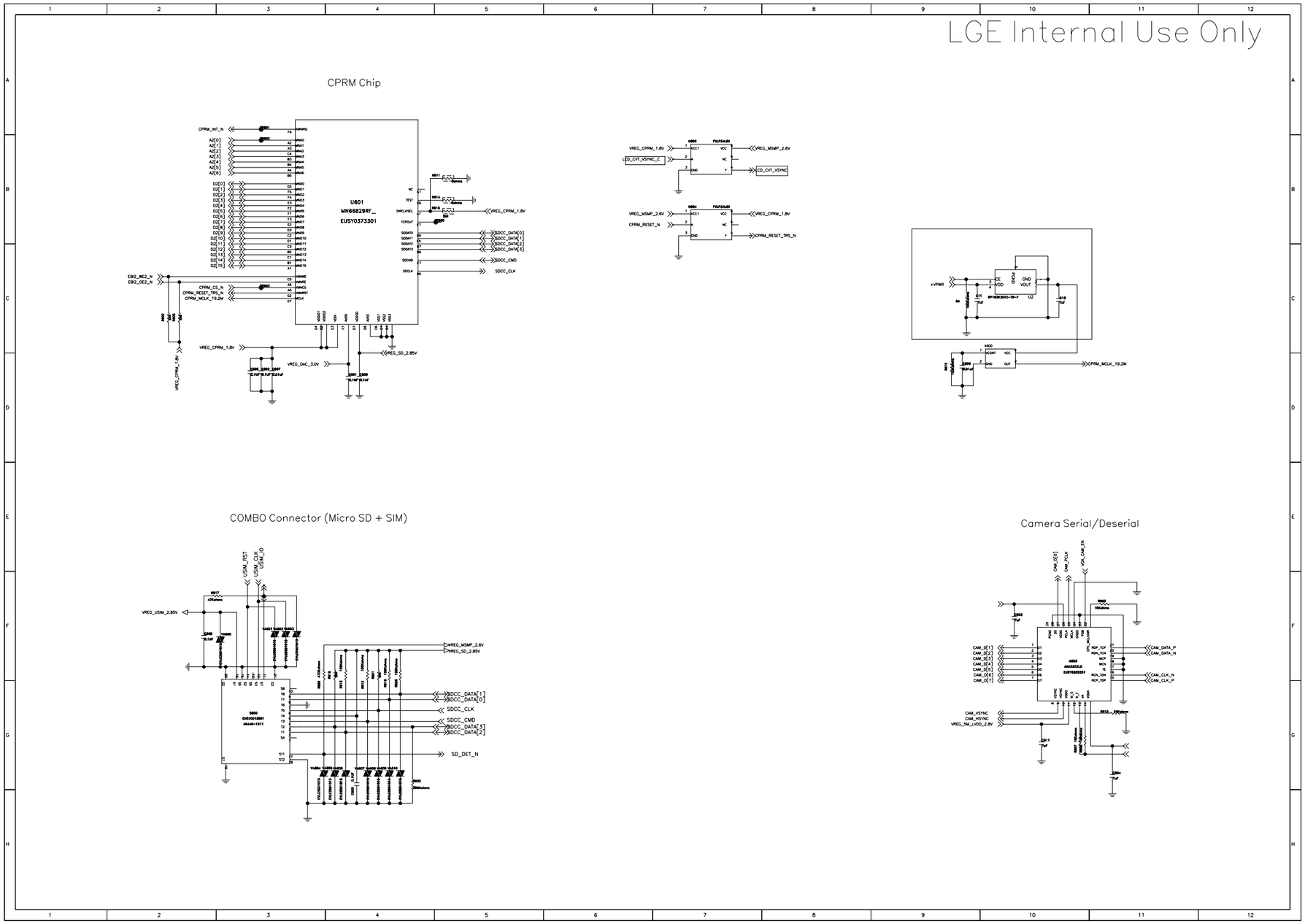

Copyright © 2009 LG Electronics. Inc. All right reserved.
Only for training and service purposes

7. CIRCUIT DIAGRAM

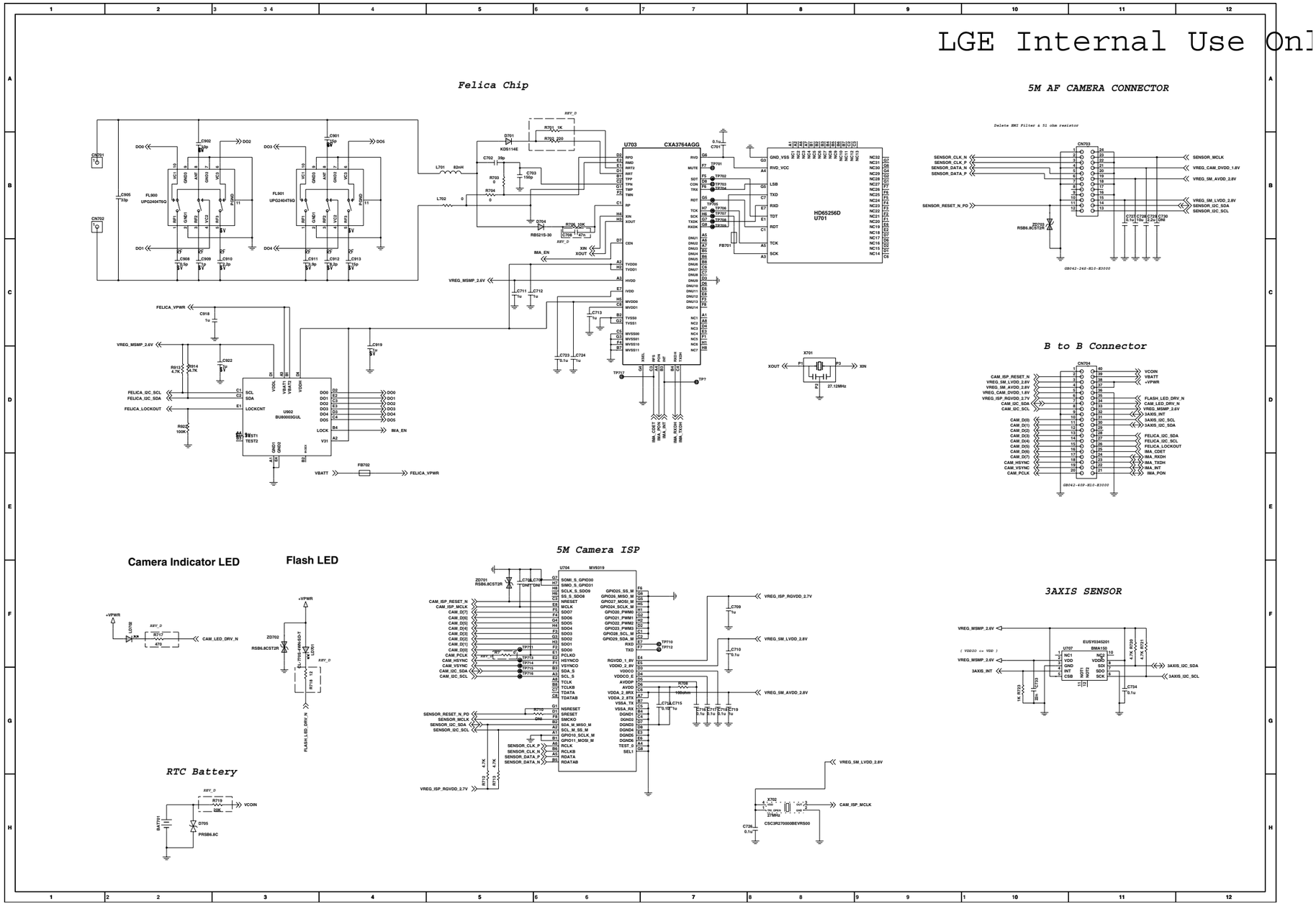

Copyright © 2009 LG Electronics. Inc. All right reserved.
Only for training and service purposes

LGE Internal Use Only

7. CIRCUIT DIAGRAM

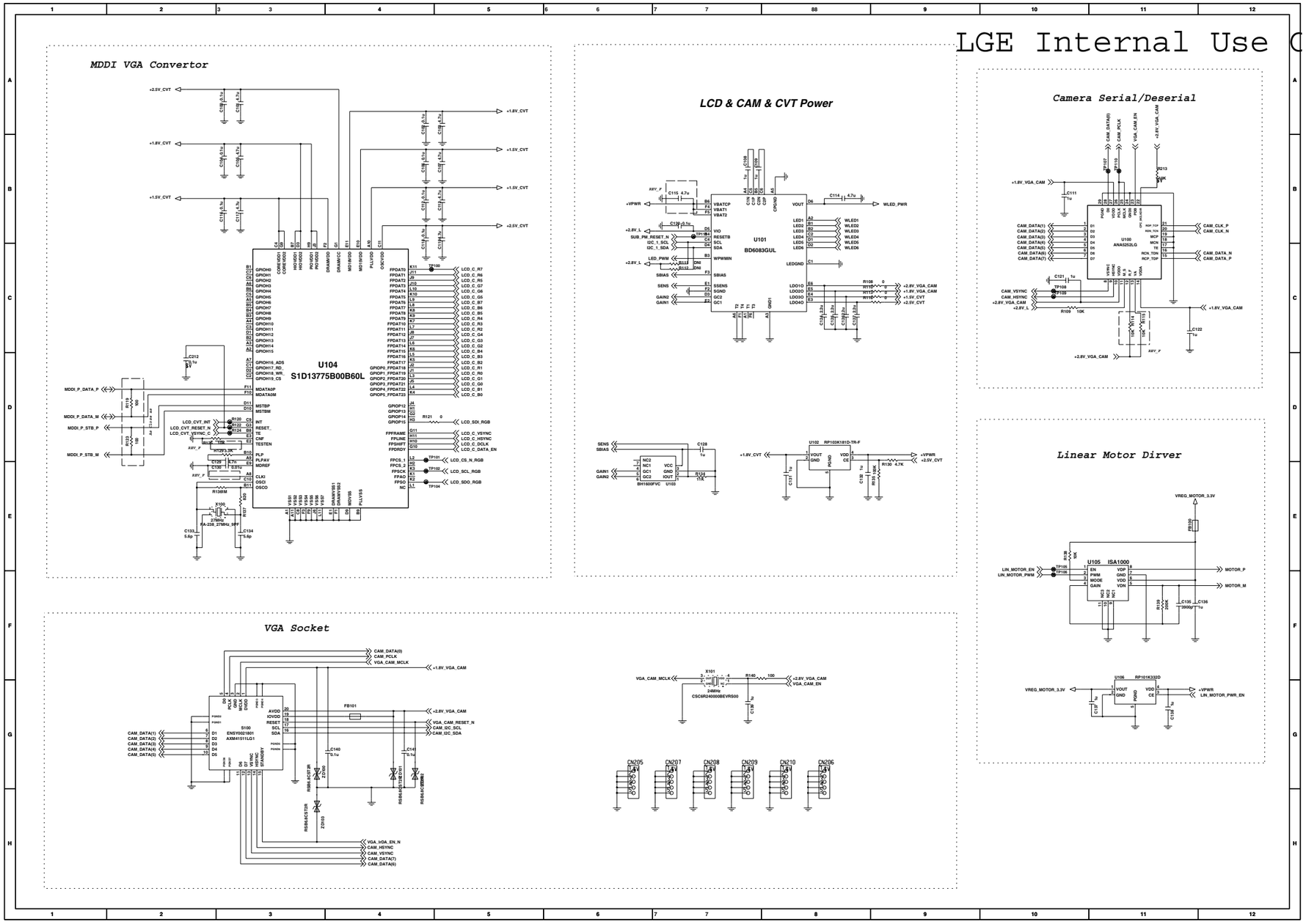

Copyright © 2009 LG Electronics. Inc. All right reserved.
Only for training and service purposes

7. CIRCUIT DIAGRAM

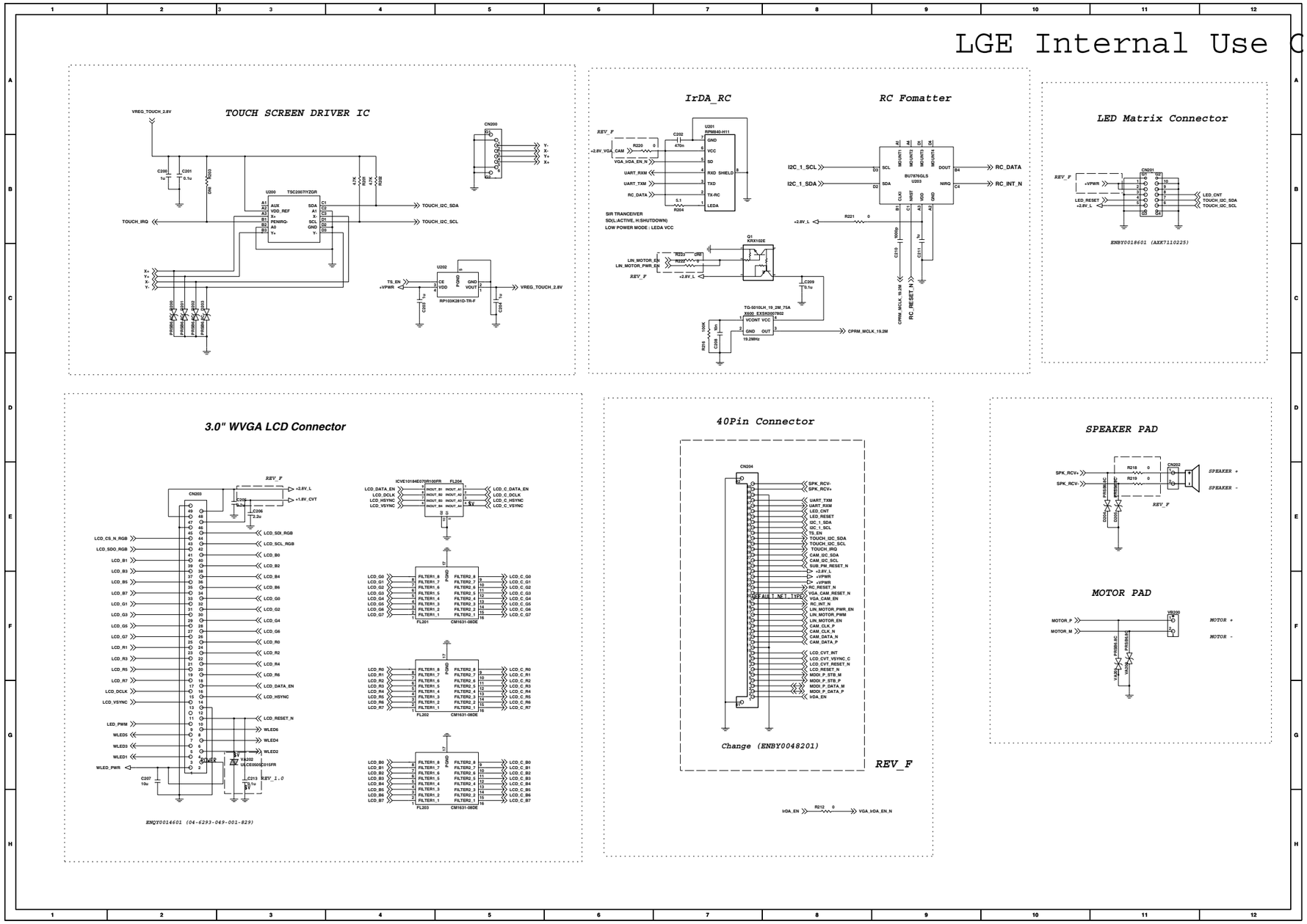

Copyright © 2009 LG Electronics. Inc. All right reserved.
Only for training and service purposes

LGE Internal Use Only

7. CIRCUIT DIAGRAM

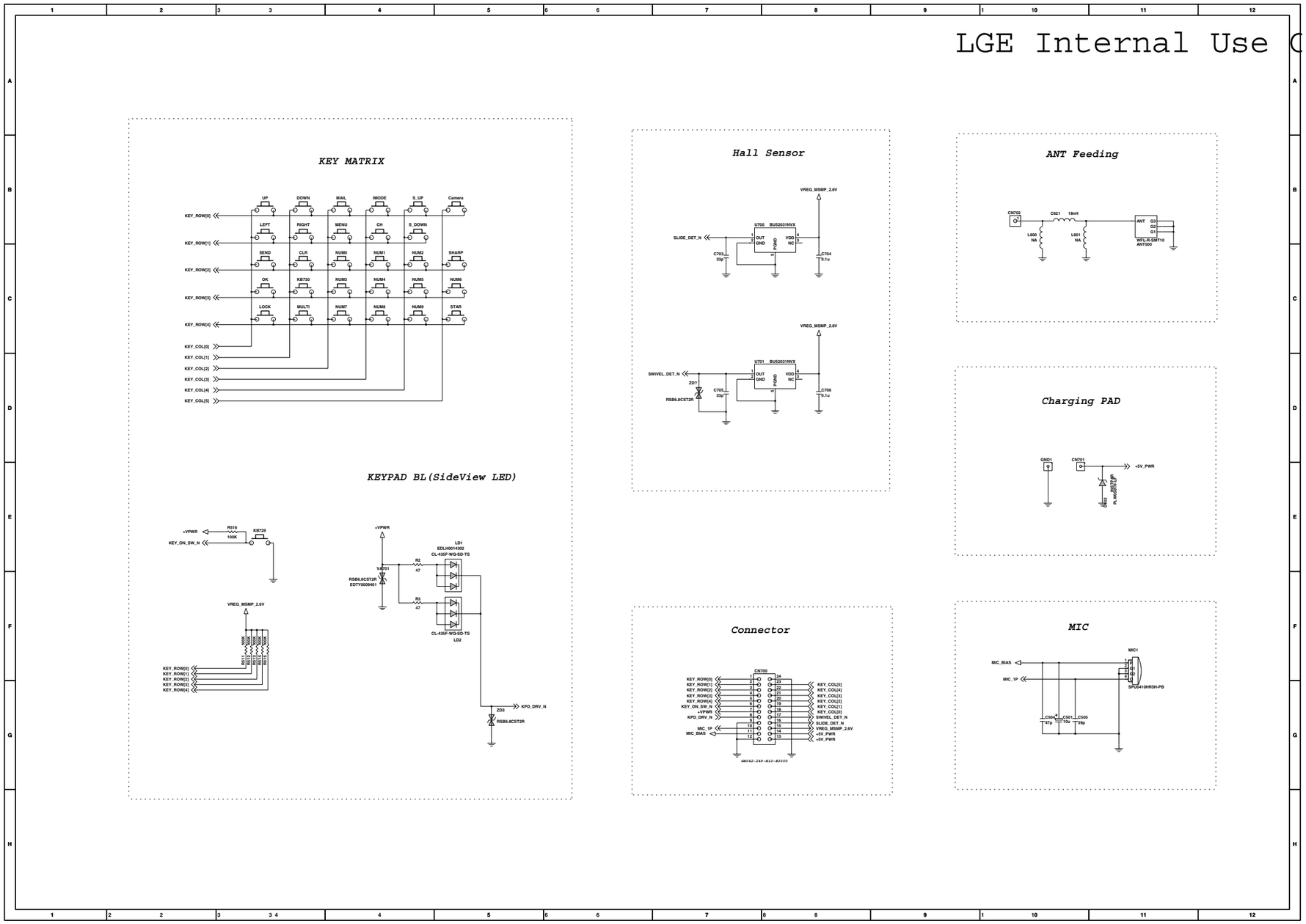

Copyright © 2009 LG Electronics. Inc. All right reserved.
Only for training and service purposes

8. BGA Pin Map

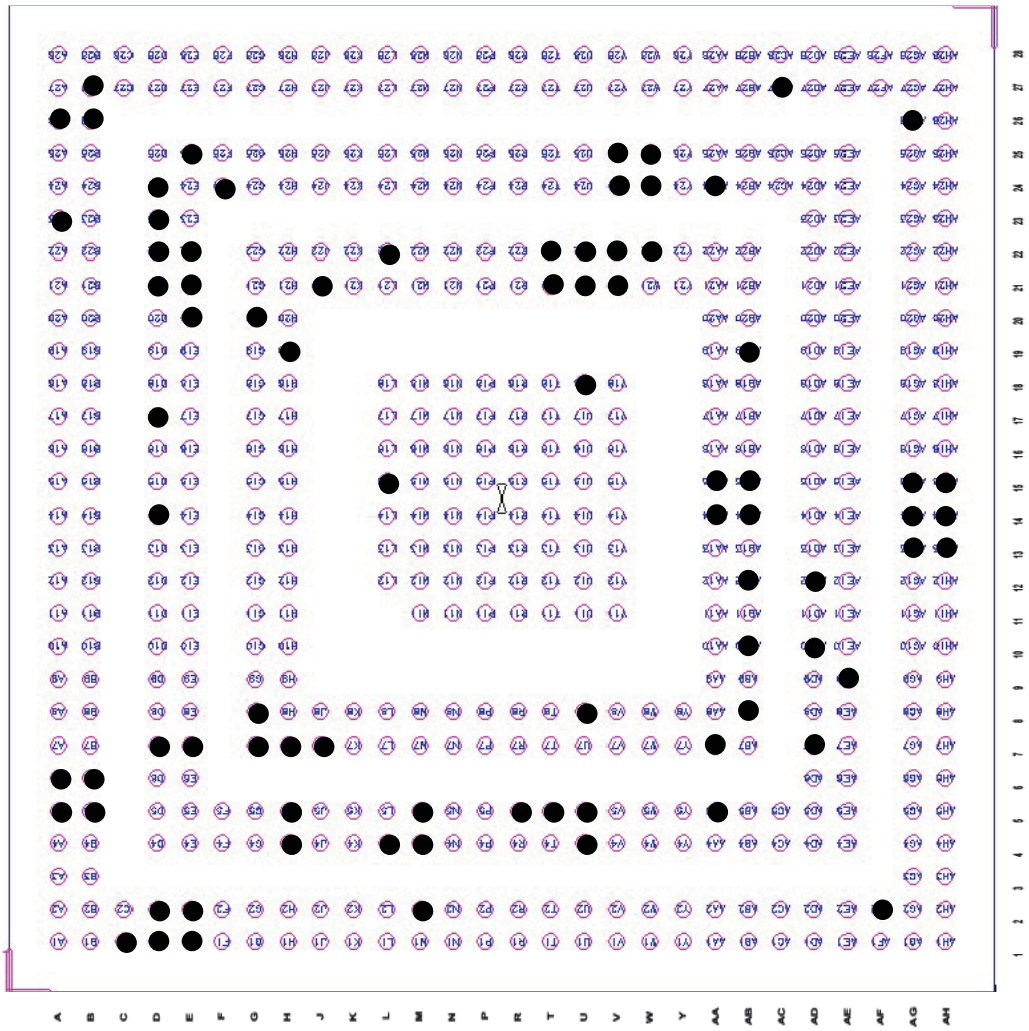

○ : USE

● : NO USE

U200-1, U200-2 : MSM 7200A-DATA
(EUSY0344201)

Copyright © 2009 LG Electronics. Inc. All right reserved.
Only for training and service purposes

LGE Internal Use Only

8. BGA Pin Map

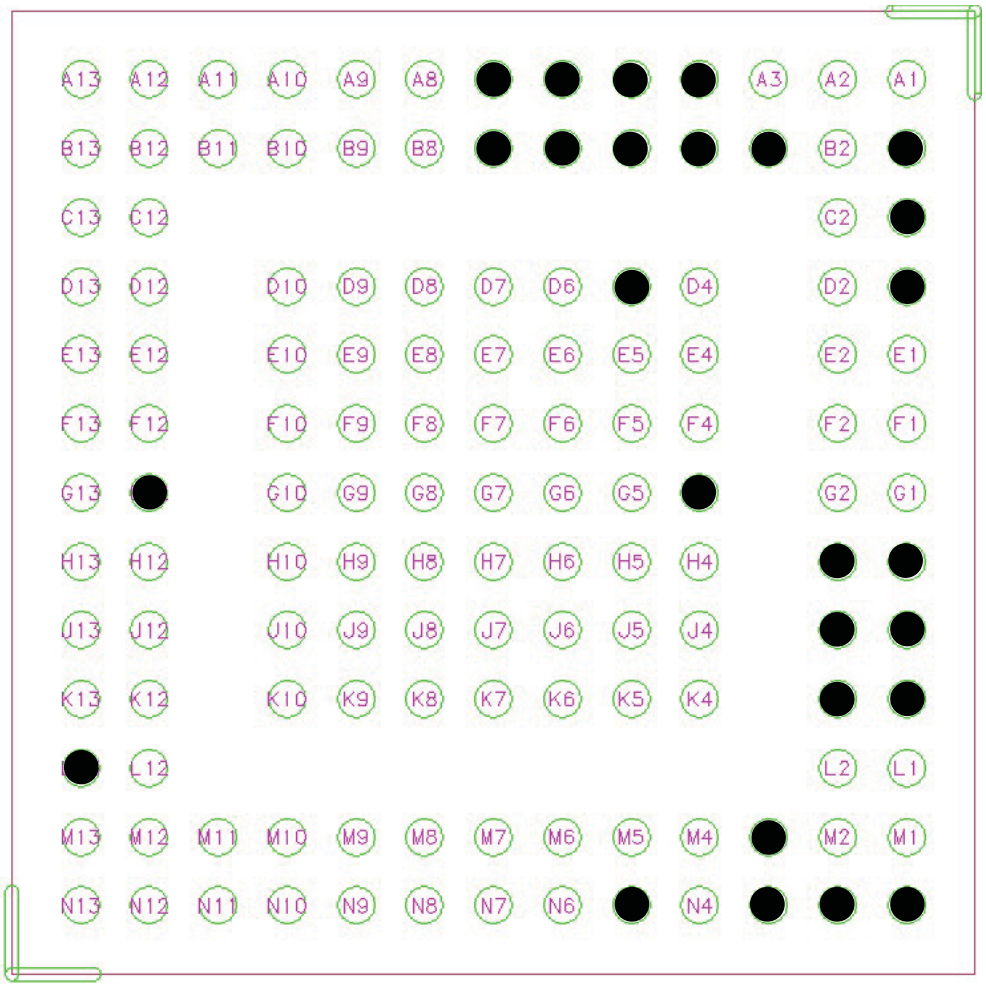

○ : USE

● : NO USE

U400 : PM7540
(EUSY0342201)

Copyright © 2009 LG Electronics. Inc. All right reserved.
Only for training and service purposes

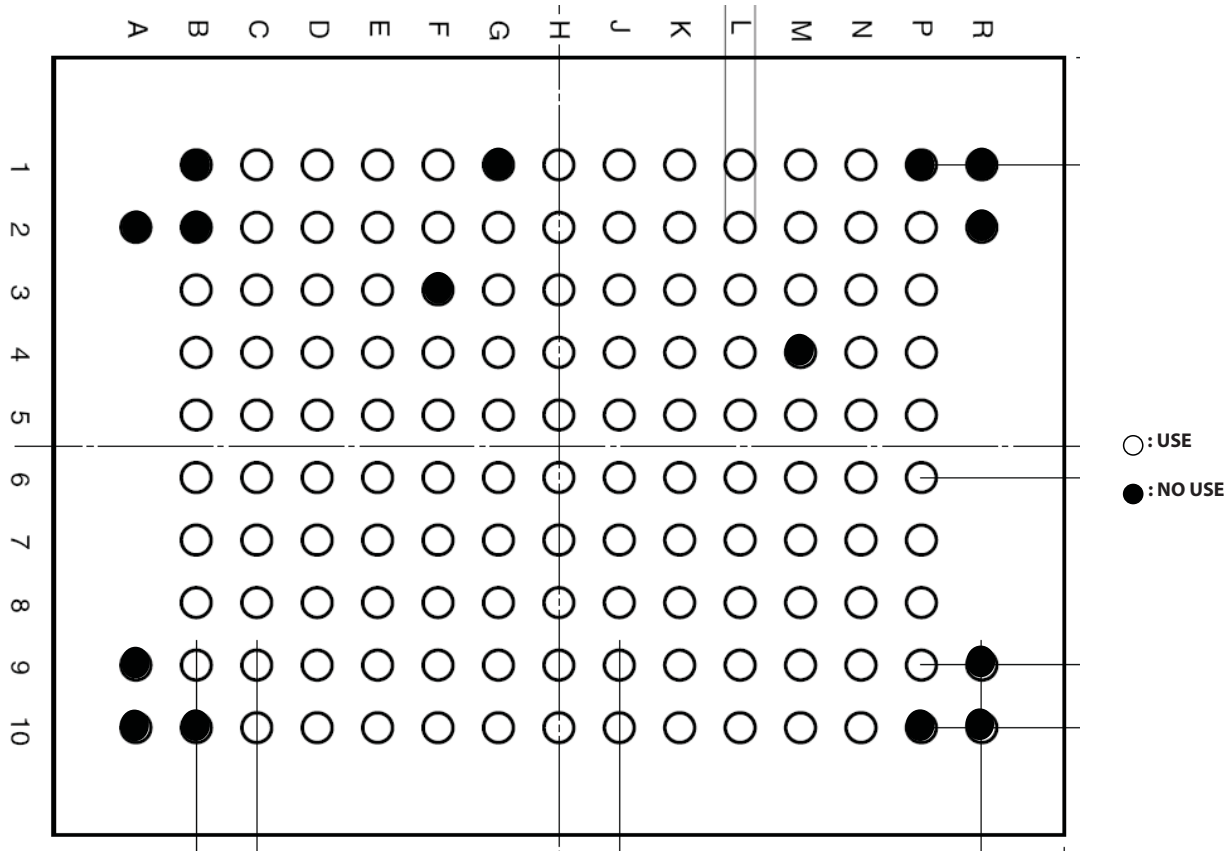

U300 : TYB000CC11CFKP
(EUSY0380601)

Copyright © 2009 LG Electronics. Inc. All right reserved.
Only for training and service purposes

LGE Internal Use Only

8. BGA Pin Map

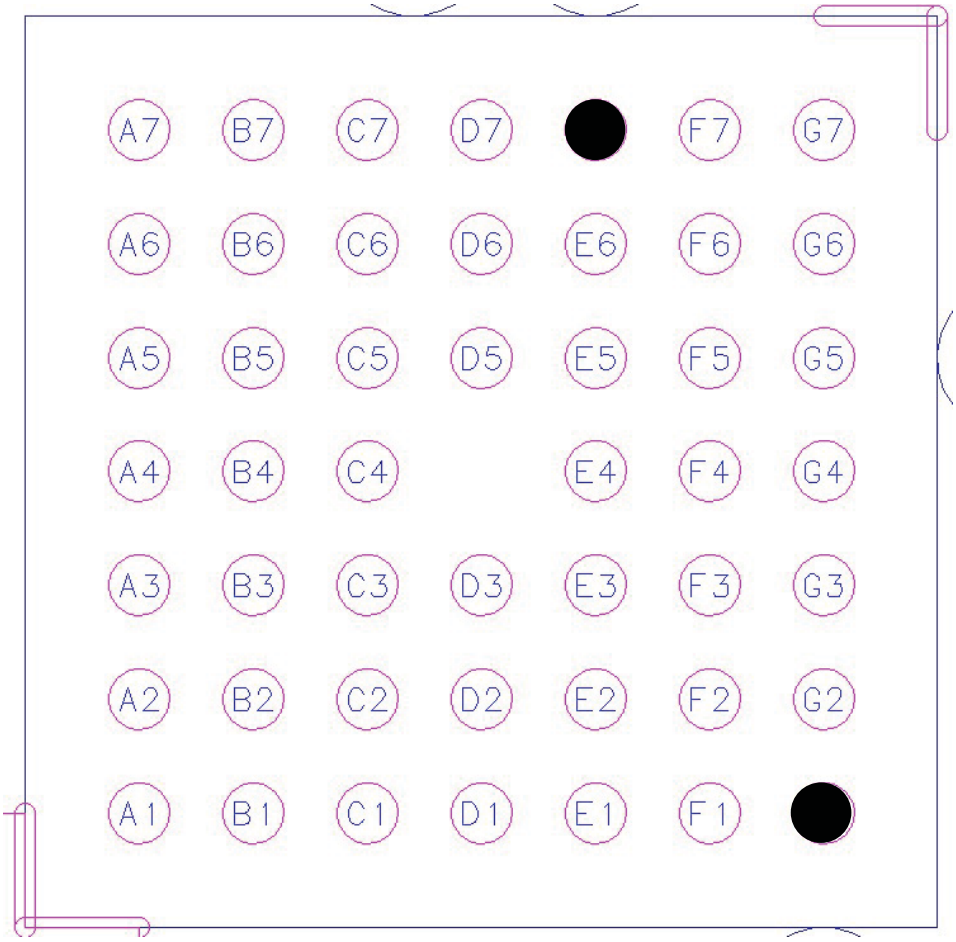

○ : USE

● : NO USE

U601 : MN66829RF
(EUSY0373301)

Copyright © 2009 LG Electronics. Inc. All right reserved.
Only for training and service purposes

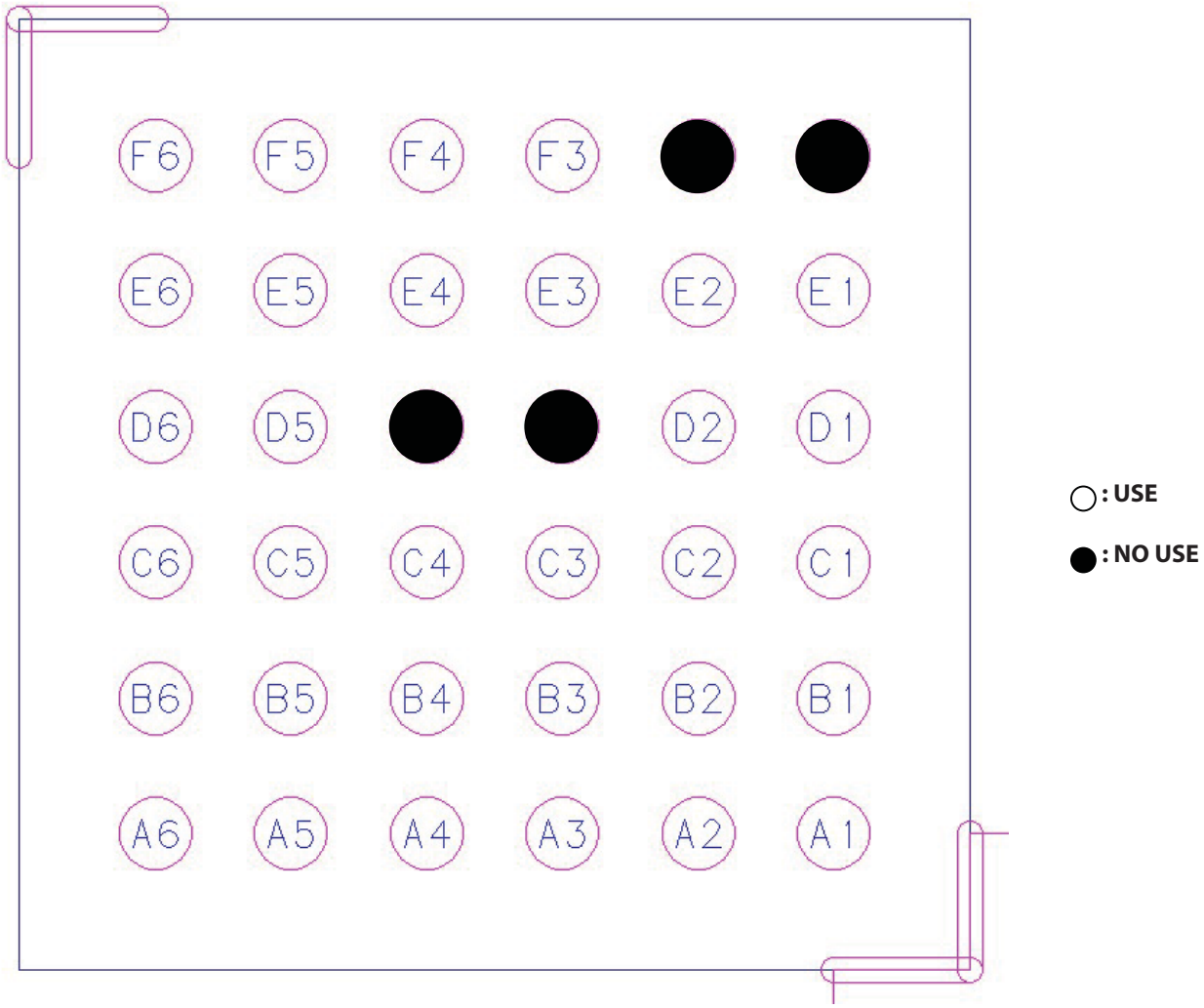

U402 : ISP1508AET
(EUSY0320201)

Copyright © 2009 LG Electronics. Inc. All right reserved.
Only for training and service purposes

LGE Internal Use Only

8. BGA Pin Map

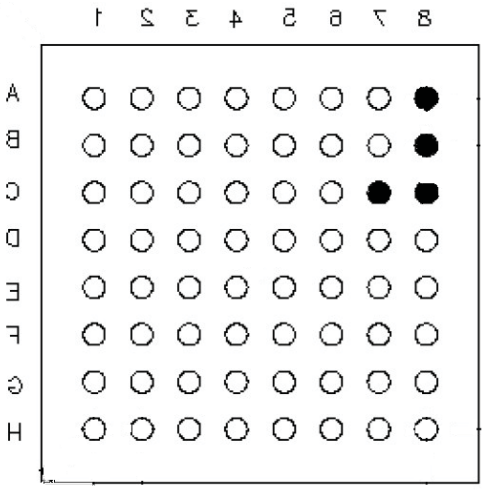

○ : USE

● : NO USE

U704 : MV9319
(EUSY0321201)

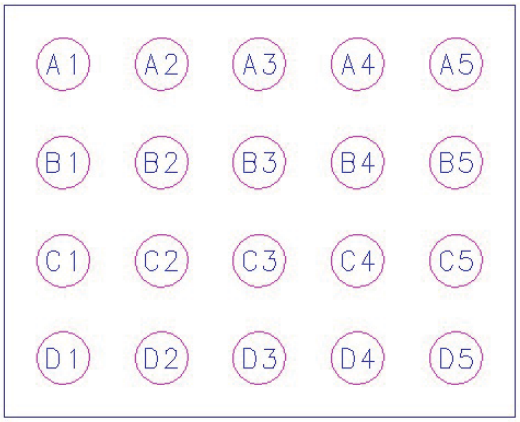

IC500 : MAX9877AEWP_TG45
(EUSY0360201)

Copyright © 2009 LG Electronics. Inc. All right reserved.
Only for training and service purposes

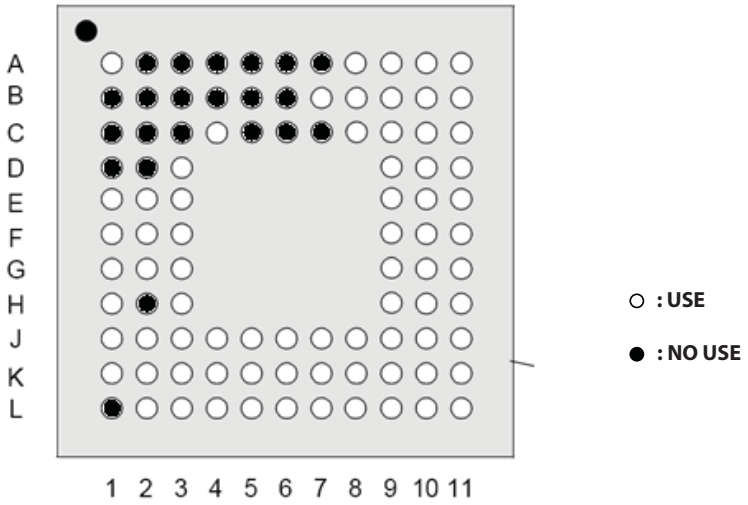

U104 : S1D13775B00B60L
(EUSY0366801)

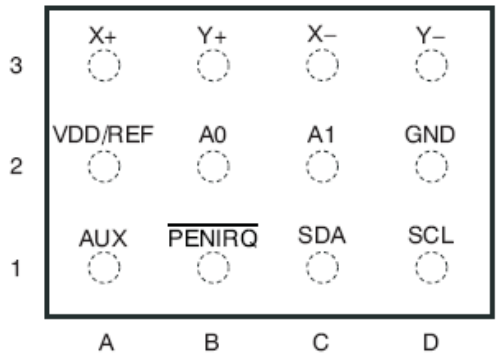

U200 : TSC2007IYZGR
(EUSY0337101)

Copyright © 2009 LG Electronics. Inc. All right reserved.
Only for training and service purposes

LGE Internal Use Only

8. BGA Pin Map

	A	B	C	D	E	F	G	H	
8	NC	Reserved	MVDD1	CON	Reserved	Reserved	RXDK	NC	8
7	Reserved	MVSS11	Reserved	CEN	IVDD	MUTE	TXDK	TCK	7
6	Reserved	Reserved	Reserved	Reserved	Reserved	TRX	RVD	SCK	6
5	Reserved	Reserved	MVSS00	Top View		SDT	RDT	MVDD0	5
4	PON	RXDH	TXDH	NC		MVSS10	XSEL	XIN	4
3	HVDD	INT	RFS	Reserved	NC	Reserved	MVSS01	XOUT	3
2	TVDD0	TVSS0	TPN	RPD	RMD	TMN	TVSS1	TVDD1	2
1	NC	TPP	RP	RRT	RRT2	NC	TMP	NC	1
	A	B	C	D	E	F	G	H	

○ : USE

● : NO USE

U703 : CAX3764AGG
(EUSY0369801)

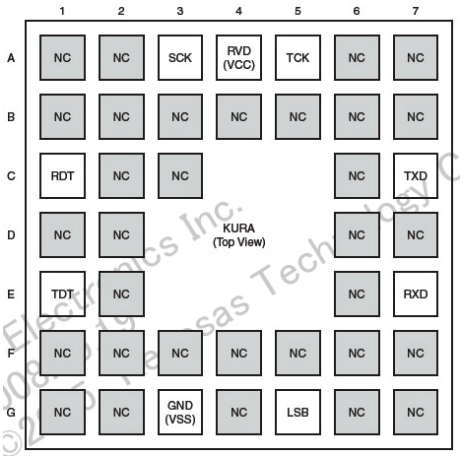

U701 : HD65256D
(EUSY0370101)

Copyright © 2009 LG Electronics. Inc. All right reserved.
Only for training and service purposes

	E1	E2	E3	E4
E	LOCKCNT	DO1	DO3	GND
	D1	D2	D3	D4
D	VDDL	DO0	DO4	VDDH
	C1	C2	C3	C4
C	SCL	SDA	DO2	DO5
	B1	B2	B3	B4
B	VBAT	(INDEX)	N.C	LOCK
	A1	A2	A3	A4
A	GND	V31	VBAT	N.C

○ : USE

● : NO USE

U902 : BU80003GUL
(EUSY0383102)

Copyright © 2009 LG Electronics. Inc. All right reserved.
Only for training and service purposes

LGE Internal Use Only

Copyright © 2009 LG Electronics. Inc. All right reserved.
Only for training and service purposes

9. PCB LAYOUT

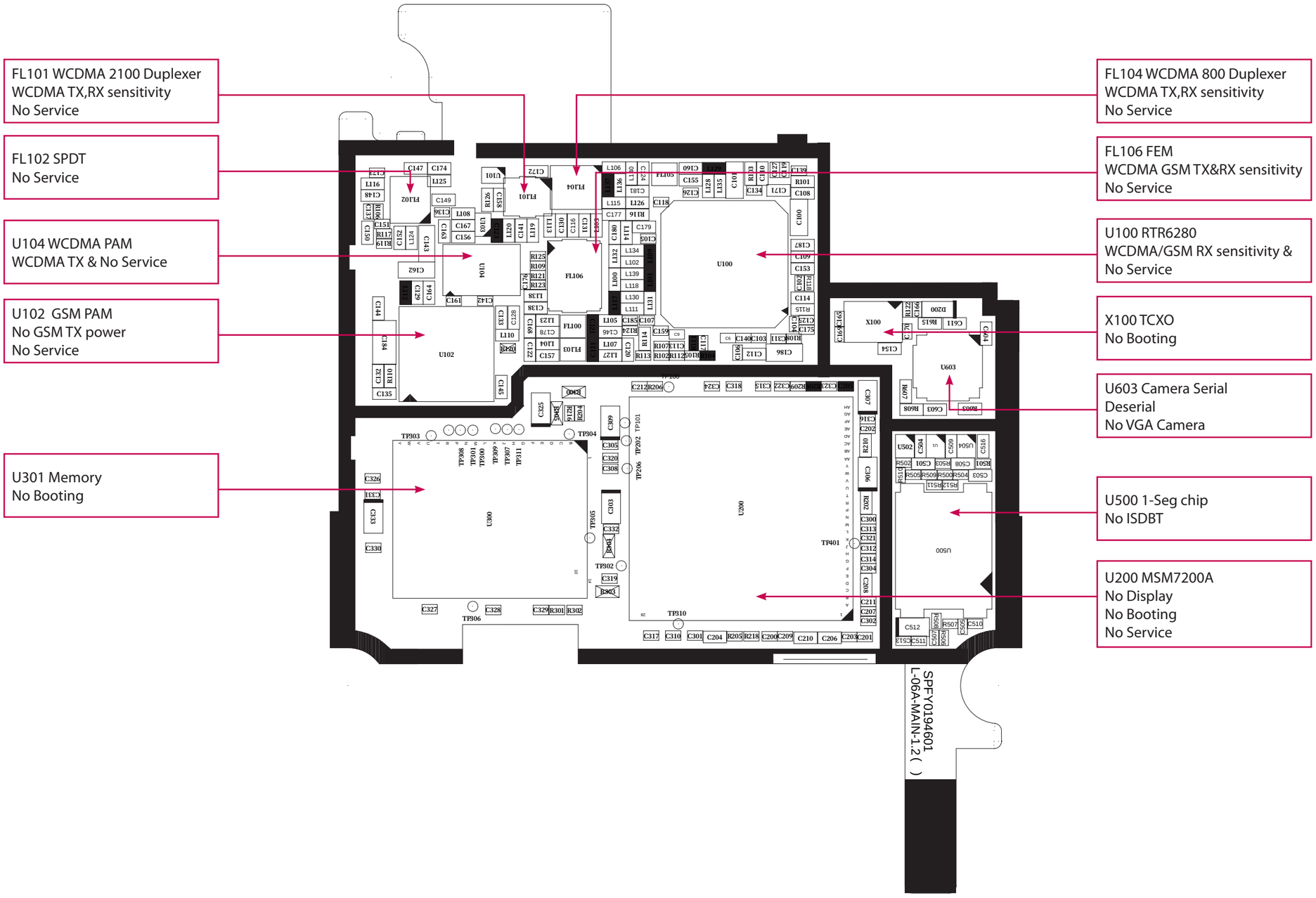

Copyright © 2009 LG Electronics. Inc. All right reserved.
Only for training and service purposes

LGE Internal Use Only

9. PCB LAYOUT

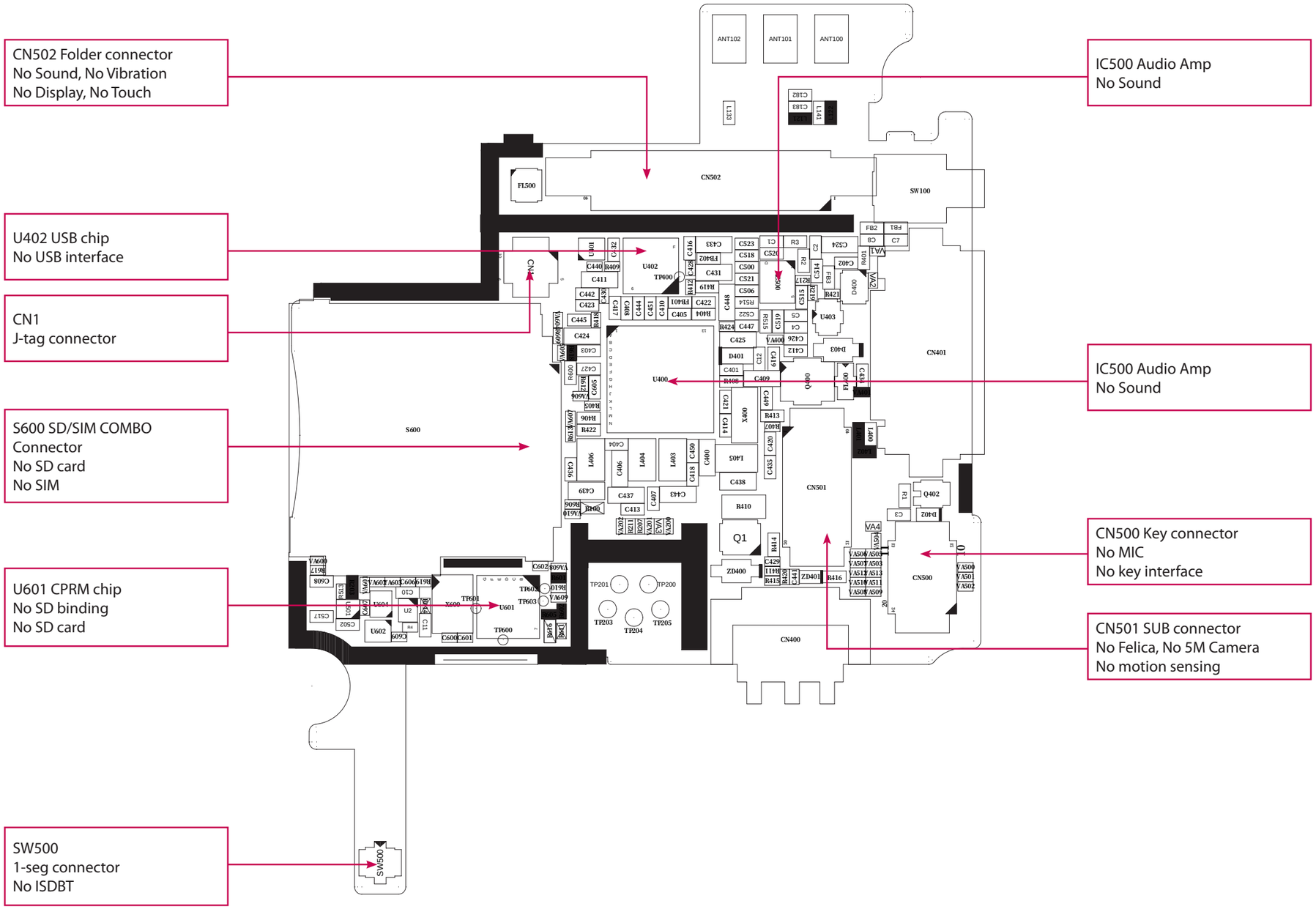

Copyright © 2009 LG Electronics. Inc. All right reserved.
Only for training and service purposes

9. PCB LAYOUT

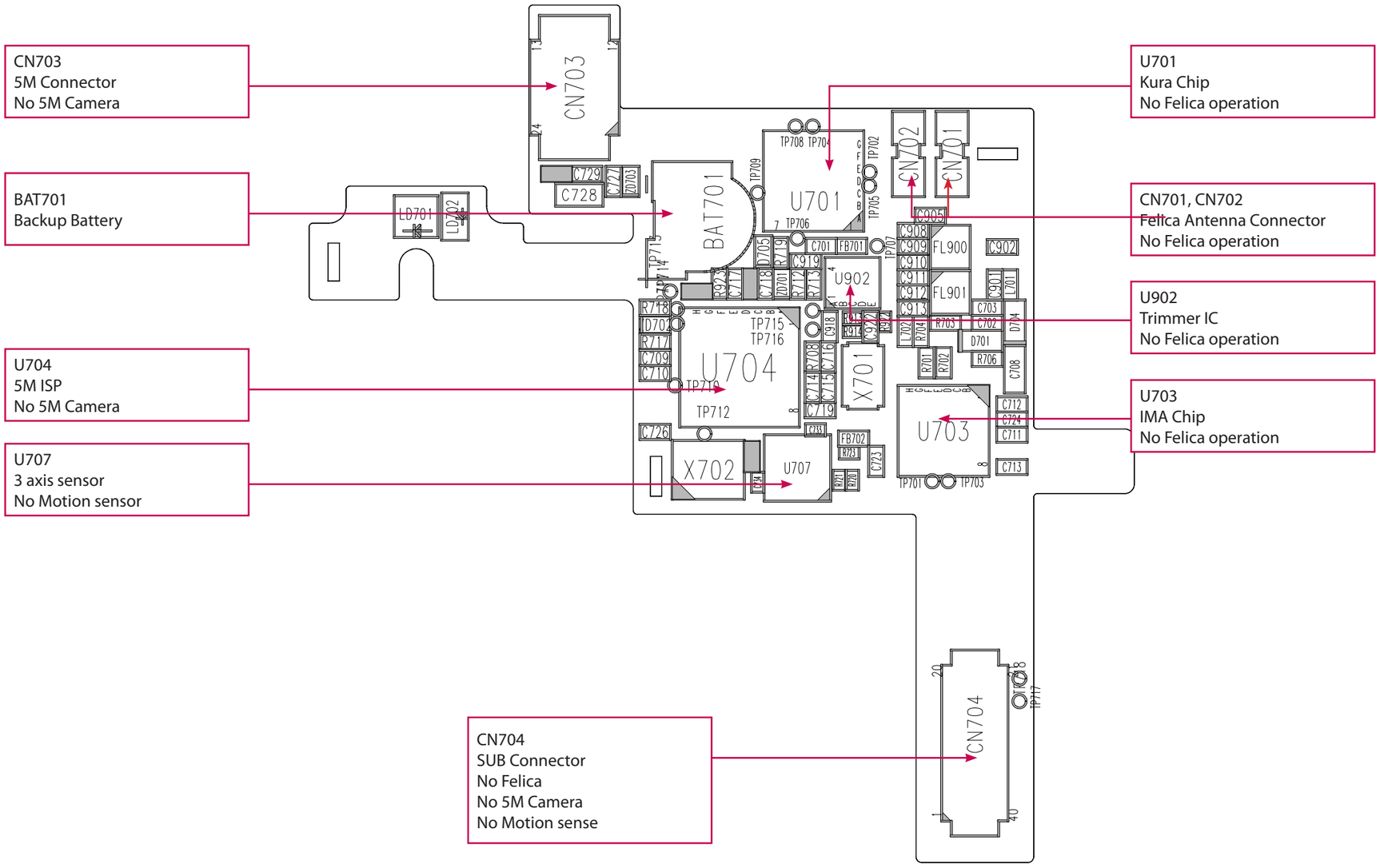

L06A-F_SUB-1.0-PLACE-BOT

Copyright © 2009 LG Electronics. Inc. All right reserved.
Only for training and service purposes

LGE Internal Use Only

9. PCB LAYOUT

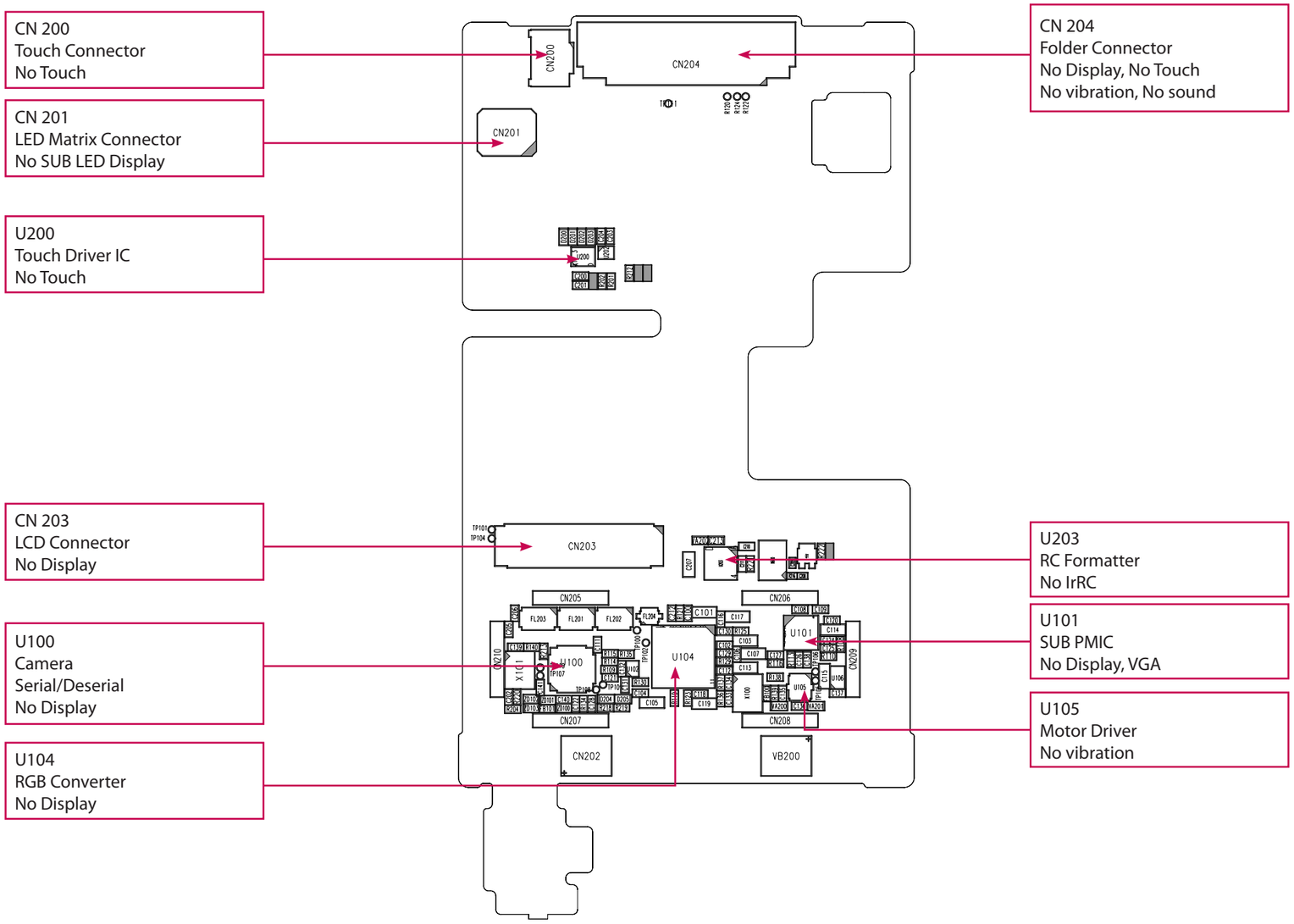

Copyright © 2009 LG Electronics. Inc. All right reserved.
Only for training and service purposes

9. PCB LAYOUT

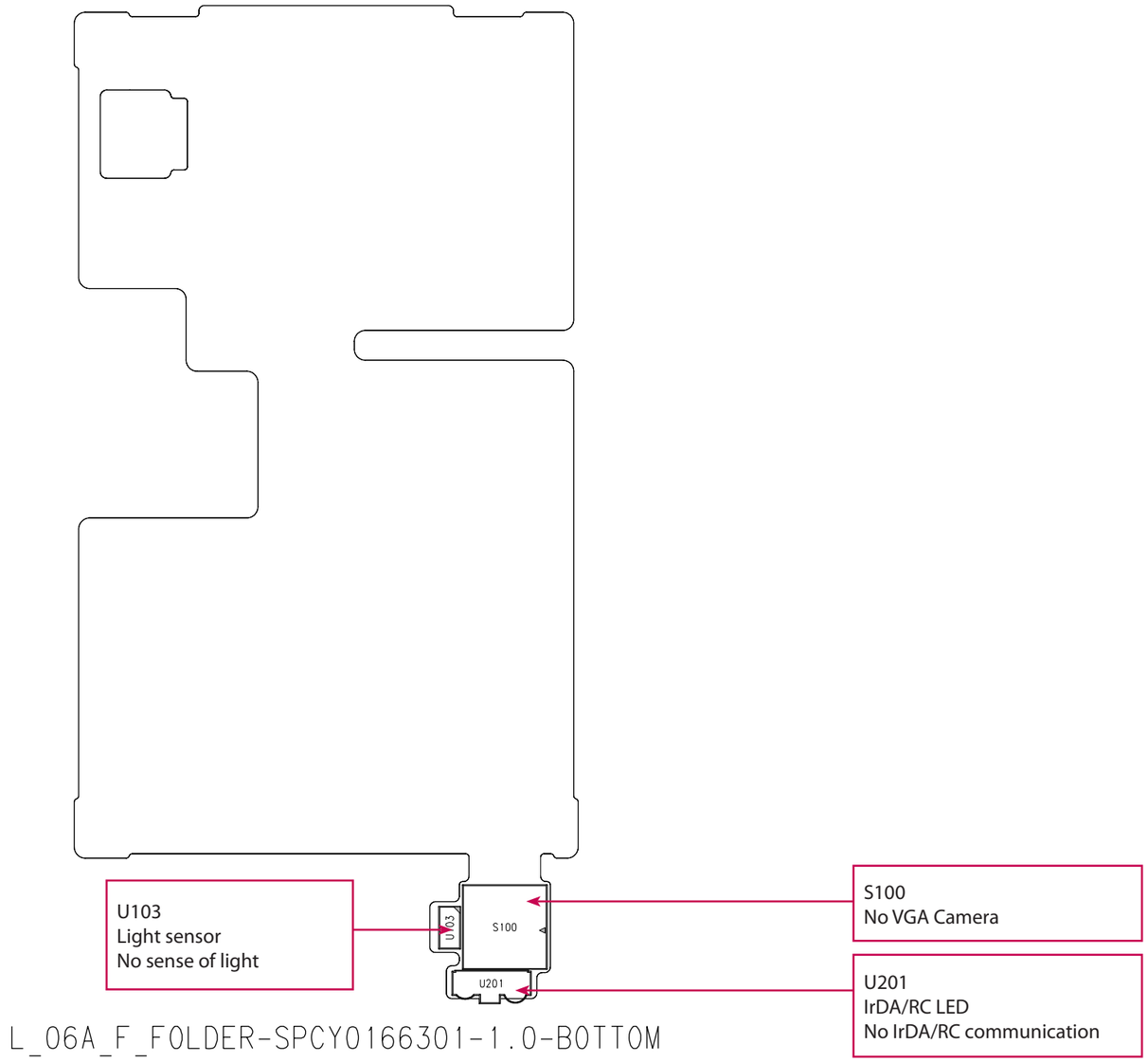

Copyright © 2009 LG Electronics. Inc. All right reserved.
Only for training and service purposes

LGE Internal Use Only

9. PCB LAYOUT

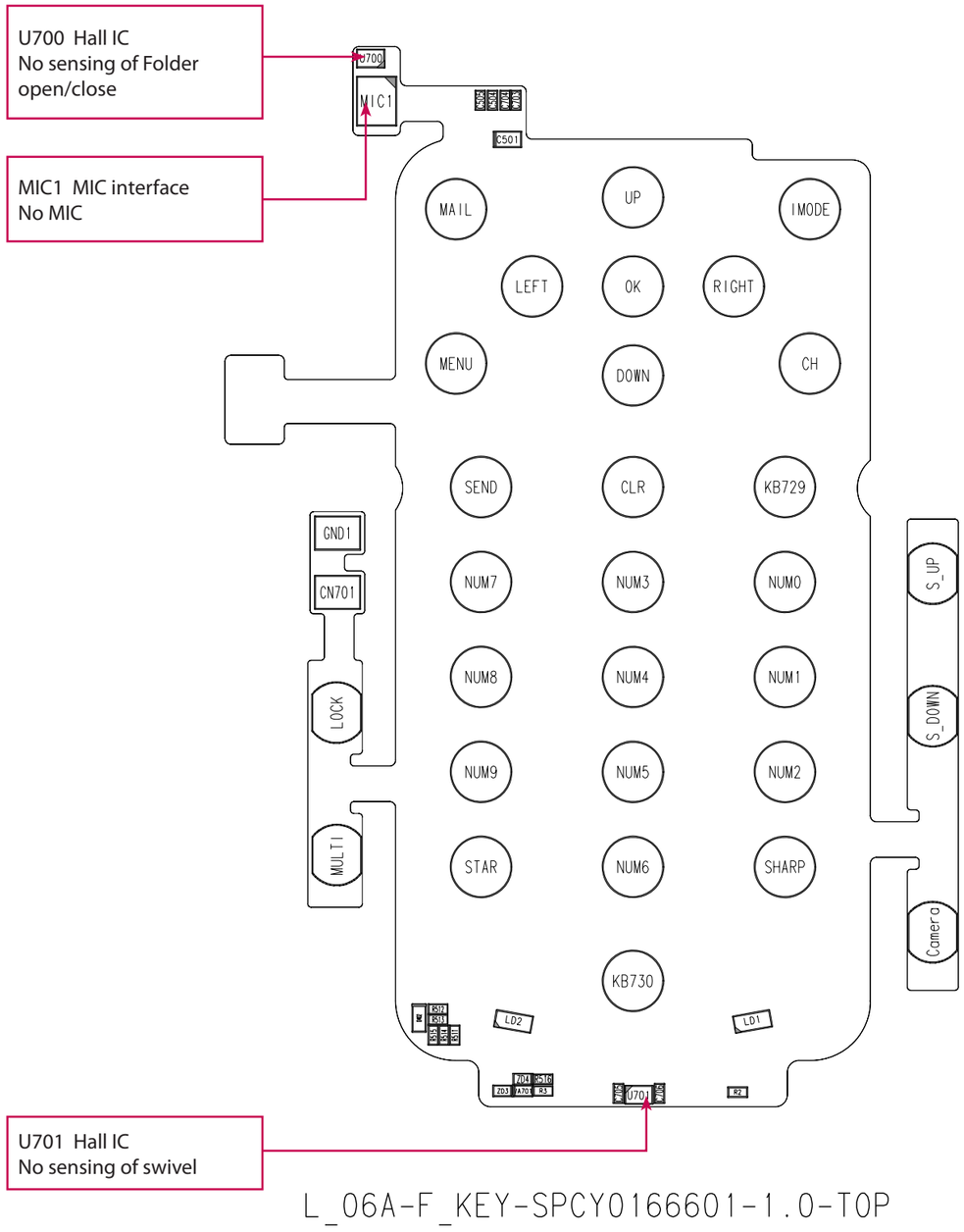

Copyright © 2009 LG Electronics. Inc. All right reserved.
Only for training and service purposes

9. PCB LAYOUT

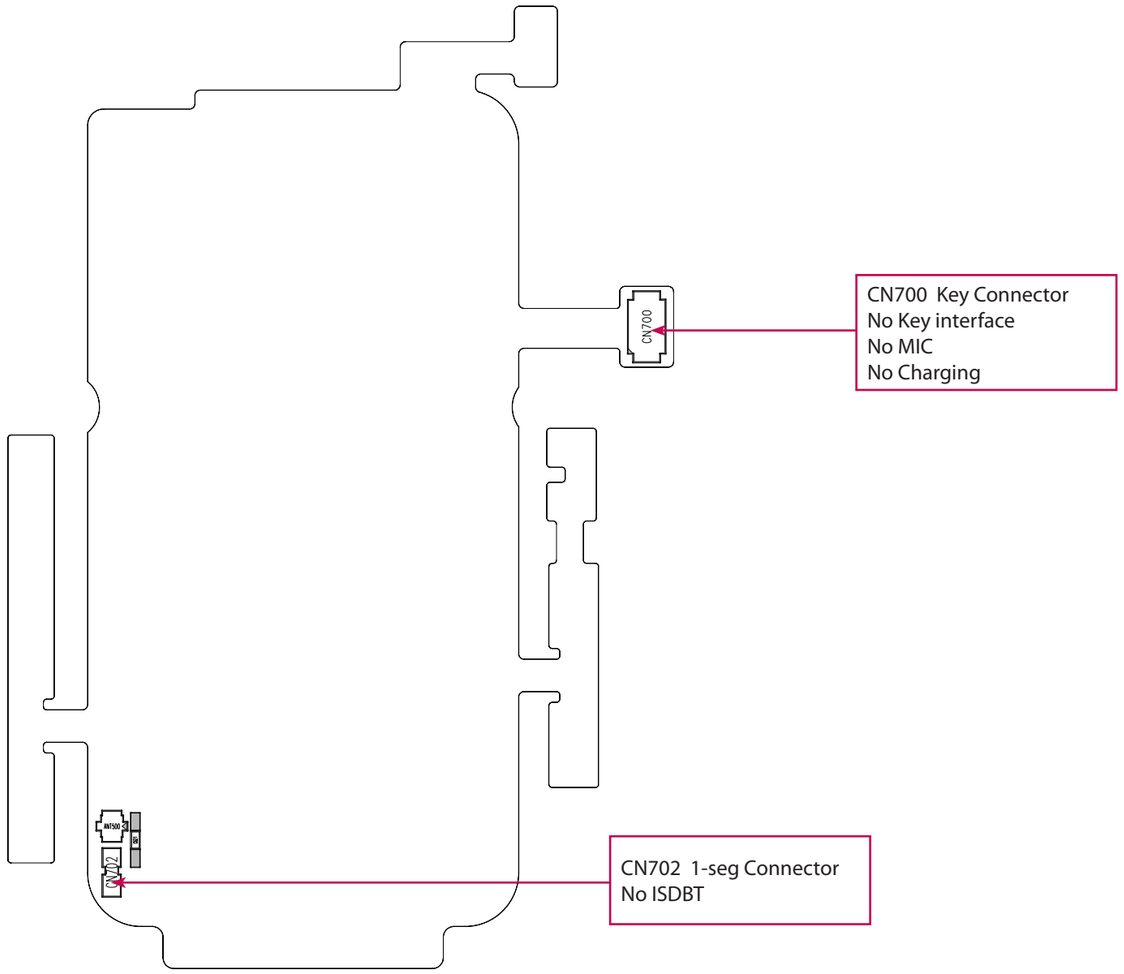

L_06A-F_KEY-SPCY0166601-1.0-BTM

Copyright © 2009 LG Electronics. Inc. All right reserved.
Only for training and service purposes

LGE Internal Use Only

Copyright © 2009 LG Electronics. Inc. All right reserved.
Only for training and service purposes

10. Calibration & RF Auto Test Program (Hot Kimchi)

10.1 Configuration of HOT KIMCHI

10.1.1 Configuration of directory

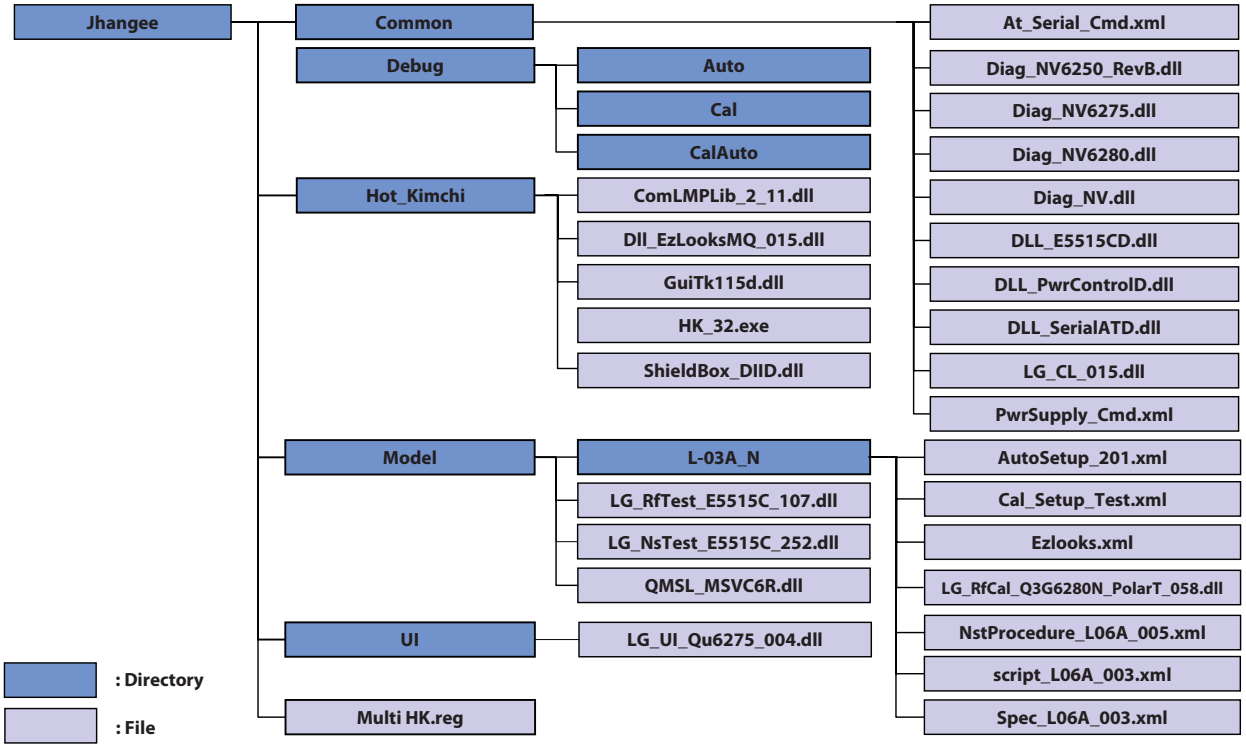

Copyright © 2009 LG Electronics. Inc. All right reserved.
Only for training and service purposes

LGE Internal Use Only

10.1.2 Description of basic files

1. Cal_Setup_Test.xml : Parameter Setup File for Calibration items
2. NstProcdure_L06A_005.xml : Scenario Setup File for Auto RF-Test
3. Spec_L06A_003.xml : Specification File of RF Test items
4. LG_RfCal_Q3G6280N_Polar_058.dll : RF Calibration DLL File including RF Calibration sequence functions
5. LG_NsTest_E5515C_252.dll : Auto RF-Test DLL File including RF Test sequence functions
6. DLL_E5515CD.DLL : GPIB DLL File including measuring functions in E5515CD Test Set

Copyright © 2009 LG Electronics. Inc. All right reserved.
Only for training and service purposes

10.2 How to use HOT KIMCHI

10.1.1 Configuration of directory

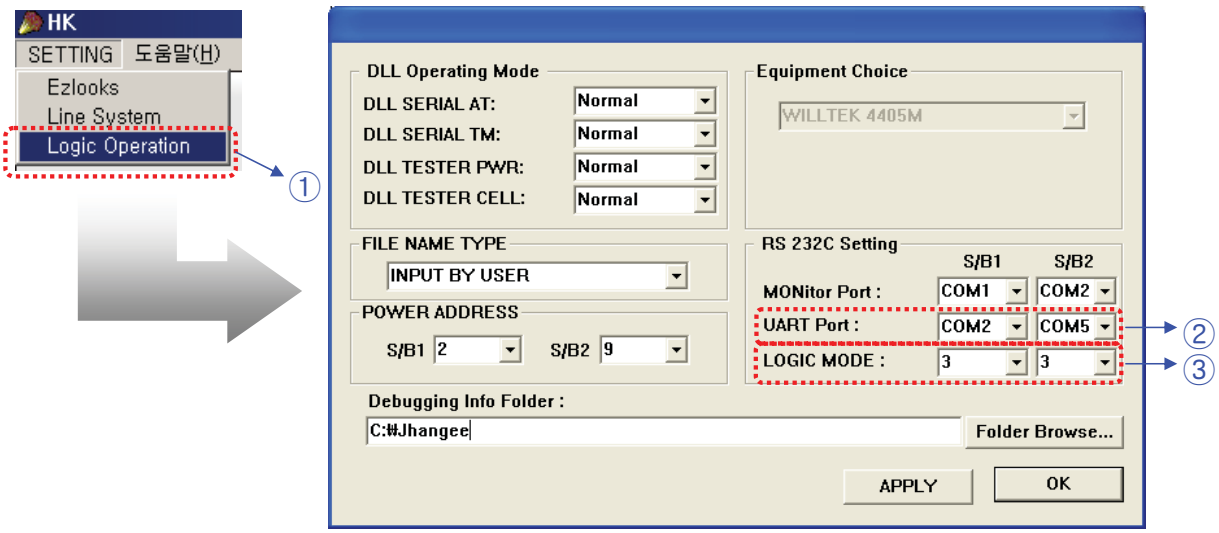

*** Procedure**

1. Click "Logic Operation" of "SETTING"menu bar
2. Select "UART Port" that PC can communicate with the phone
3. Select "LOGIC MODE" that you want
   - Logic Mode -> 1: Calibration Only
   2: Auto Test Only
   3: Calibration + Auto

Copyright © 2009 LG Electronics. Inc. All right reserved.
Only for training and service purposes

LGE Internal Use Only

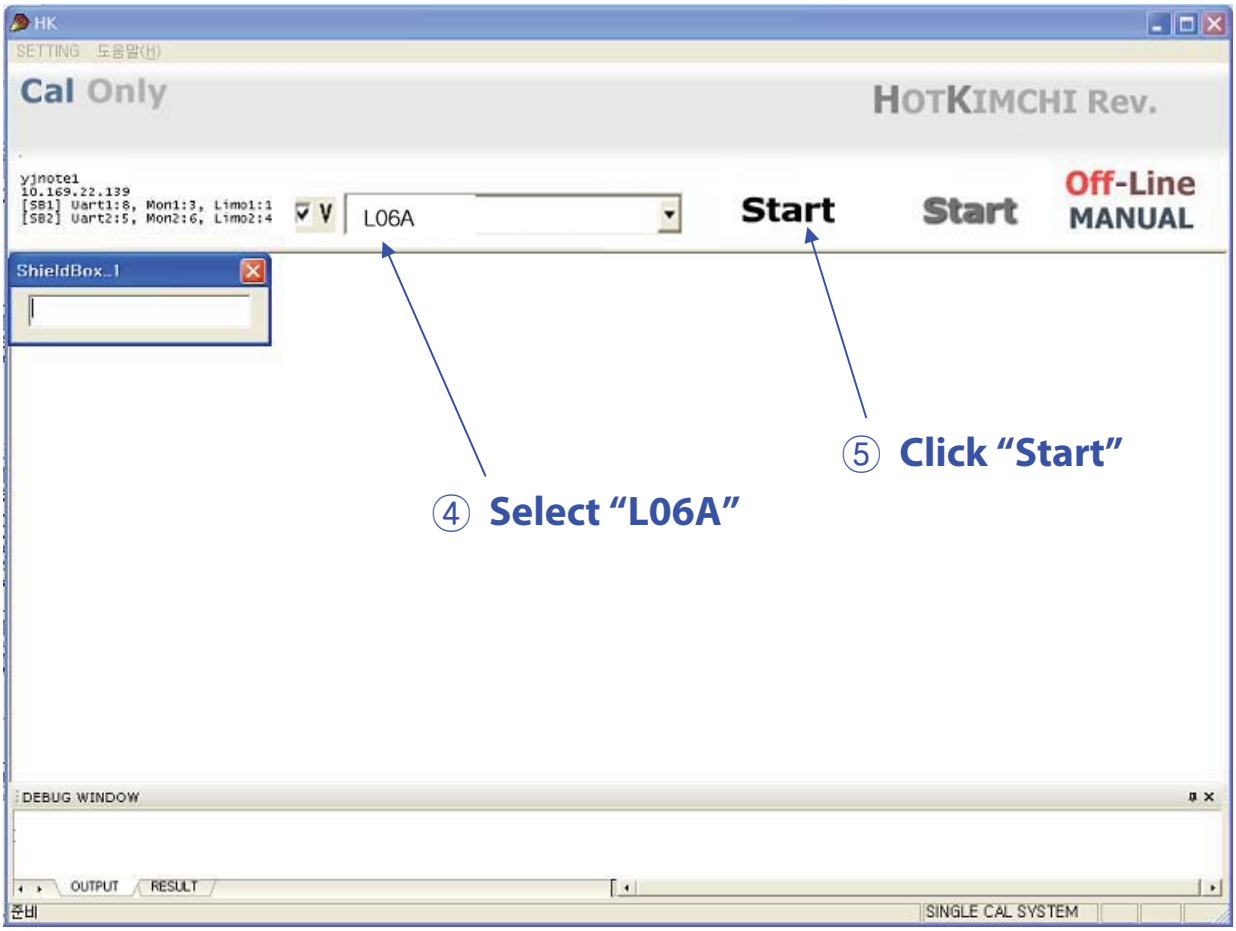

*** Procedure**

4. Select the model name "L06A"
5. Click "Start" button

Copyright © 2009 LG Electronics. Inc. All right reserved.
Only for training and service purposes

11. EXPLODED VIEW & REPLACEMENT PART LIST

11.1 EXPLODED VIEW

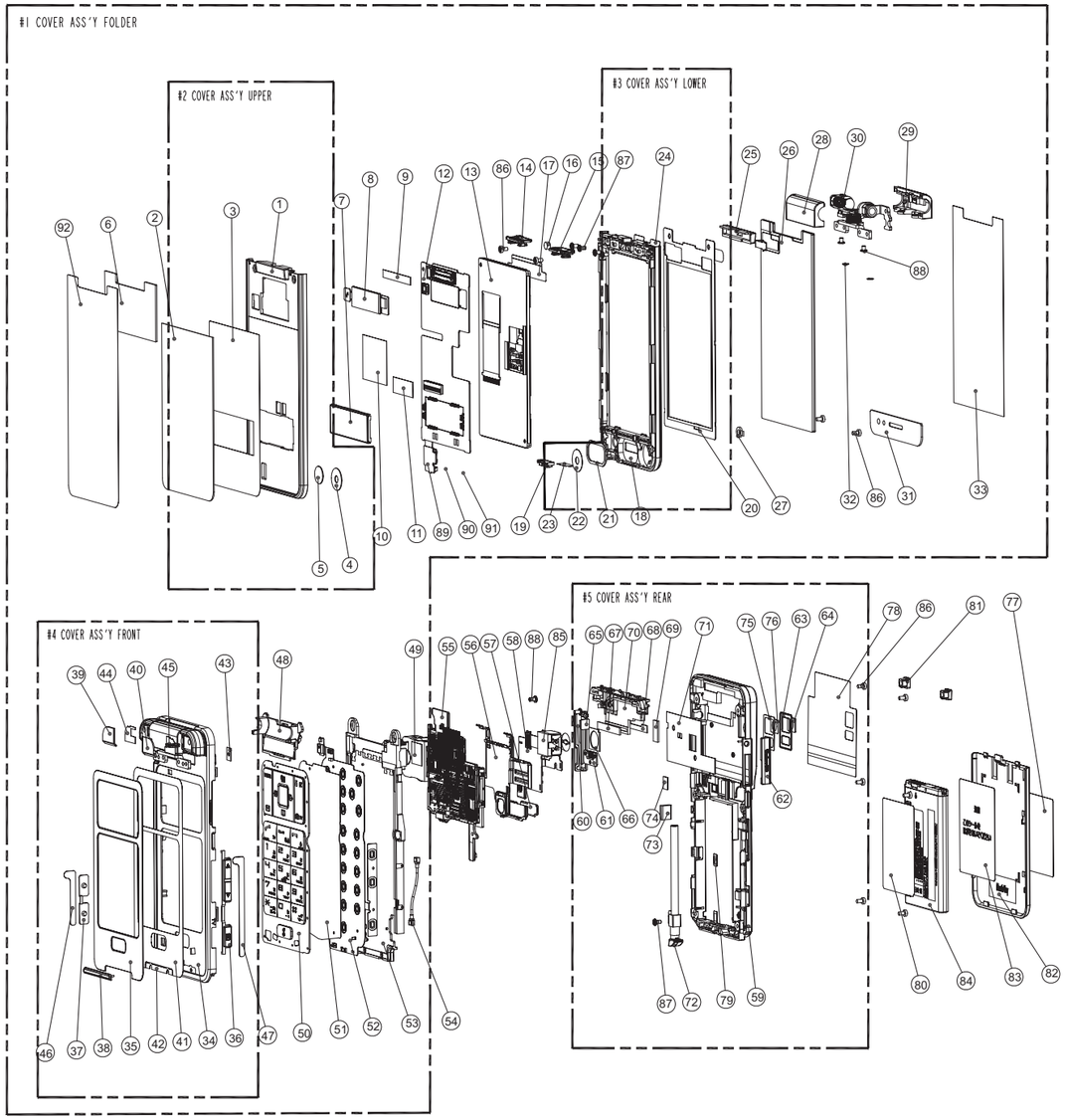

No	Part Name	Part Number	Q'ty	Remark
92	TAPE,PROTECTION [FOLDER UPPER]	MTAB0308801	1	
91	VIBRATOR,MOTOR	SJMY0008504	1	
90	SPEAKER	SUSY0028008	1	
89	CAMERA [VGA]	SVCY0020601	1	
88	SCREW MACHINE,BIND	GMEY0012901	4	
87	SCREW MACHINE,BIND	GMEY0012901	5	
86	SCREW MACHINE,BIND	GMZZ0018702	10	
85	CAMERA [5M]	SVCY0020801	1	
84	BATTERY,PACK	SBPL0099601	1	
83	FERRITE SHEET	MPFW0001401	1	
82	COVER,BATTERY	MCJA0080501	1	
81	CAP,SCREW [REAR]	MCCH0145201	2	
80	LABEL,APPROVAL	MLAA0060401	1	
79	LABEL,A/S	MLAB0003601	3	
78	TAPE,PROTECTION [REAR]	MTAB0309401	1	
77	LABEL [FELICA]	MLAZ0052101	1	
76	TAPE,WINDOW [CAMERA 5M]	MTAD0100501	1	
75	TAPE,DECO [CAMERA 5M]	MTAA0179601	1	
74	GASKET [KEYPAD PCB CON.]	MGAD0193701	1	
73	GASKET [REAR]	MGAD0193401	1	
72	ANTENNA,GSM,RETRACTABLE	SNGR0001101	1	
71	ANTENNA,GSM,FELICA	SNGF0045701	1	
70	ANTENNA,GSM,FIXED	SNGF0045601	1	
69	PAD,CONNECTOR [5M]	MPBU0054901	1	
68	PAD [INTENNA BTM]	MPBZ0231601	1	
67	PAD [INTENNA TOP]	MPBZ0231501	1	
66	PAD,CAMERA [5M]	MPBT0070401	1	
65	CAP,MOBILE SWITCH	MCCF0061901	1	
64	WINDOW,CAMERA [5M]	MWAE0043901	1	
63	DECO,CAMERA [5M]	MDAD0043801	1	
62	CAP,MULTIMEDIA CARD	MCCG0001831	1	
61	LENS,FLASH	MLCE0012001	1	
60	CAP,RECEPTACLE	MCCE0048701	1	
59	COVER,REAR	MCJN0096901	1	
58	PCB ASSY,SUB	SAJY0038501	1	
57	TAPE,SHIELD [SIM]	MTAC0090901	1	
56	CAN ASSY,SHIELD	ACKA0015301	1	
55	PCB ASSY,MAIN	SAFY0302701	1	
54	CABLE,COAXIAL [RETRACTABLE]	SWCC0006401	1	
53	BRACKET [PCB]	MBFZ0033801	1	
52	FPCB ASSY,KEYPAD	SACY0084901	1	
51	DOME ASSY,METAL	ADCA0094901	1	
50	BUTTON ASSY, MAIN	ABGF0012201	1	
49	TAPE,CAMERA [5M]	MTAK0020901	1	
48	DECO [HINGE FRONT]	MDAY0041501	1	
47	TAPE,PROTECTION [VOLUME]	MTAB0285601	1	
46	TAPE,PROTECTION [MULTI]	MTAB0285701	1	
45	TAPE,DECO [FRONT TOP-R]	MTAA0179501	1	
44	TAPE,DECO [FRONT TOP-L]	MTAA0179401	1	
43	FILTER,MIC	MFBD0036501	1	
42	TAPE [STOPPER FOLDER]	MTAZ0238001	1	
41	TAPE,DECO [FRONT KEYPAD]	MTAA0179301	1	
40	DECO,FRONT [TOP-R]	MDAG0045701	1	
39	DECO,FRONT [TOP-L]	MDAG0045601	1	
38	STOPPER,FOLDER	MSGC0008001	1	
37	BUTTON,SIDE [MULTI]	MBJL0078201	1	
36	BUTTON,SIDE [VOLUME]	MBJL0078101	1	
35	DECO,FRONT [KEYPAD]	MDAG0045501	1	
34	COVER, FRONT	MCJK0100101	1	
33	TAPE,PROTECTION [WINDOW LCD]	MTAB0309001	1	
32	TAPE [HINGE COVER]	MTAZ0228401	1	
31	DECO,SPEAKER	MDAN0016401	1	
30	HINGE	MHFD0017001	1	
29	COVER,HINGE [LOWER]	MCJT0002501	1	
28	COVER,HINGE [UPPER]	MCJU0003201	1	
27	PAD,CAMERA [VGA]	MPBT0070301	1	
26	WINDOW,LCD [TOUCH]	MWAC0113001	1	
25	DECO [HINGE LOWER]	MDAY0041401	1	
24	TAPE,DECO [HINGE LOWER]	MTAA0179201	1	
23	TAPE,PROTECTION [IrDA]	MTAB0285501	1	
22	TAPE,MOTOR	MTAF0025101	1	
21	PAD [FILTER SPEAKER]	MPBN0067601	1	
20	TAPE,WINDOW [LCD]	MTAD0100301	1	
19	WINDOW,IrDA	MWAG0019701	1	
18	COVER,FOLDER LOWER	MCJH0044501	1	
17	GASKET [LCD DRIVER IC]	MGAD0195701	1	
16	MAGNET,SWITCH	MMAA0012201	1	
15	PAD [RIGHT]	MPBZ0224301	1	
14	PAD [LEFT]	MPBZ0224201	1	
13	MODULE, LCD	SVLM0030101	1	
12	FPCB ASSY,FOLDER	SACY0084801	1	
11	TAPE,PROTECTION [CON. LCD]	MTAB0309201	1	
10	GASKET [LCD FPCB]	MGAD0195801	1	
9	TAPE,PROTECTION [FOLDER FPCB CON.]	MTAB0322701	1	
8	FPCB ASSY,LED	SMZY0022201	1	
7	CAN ASSY,SHIELD[FOLDER]	ACKA0018901	1	
6	WINDOW [LCD]	MWAZ0007301	1	
5	PAD,SPEAKER	MPBN0067501	1	
4	PAD,MOTOR	MPBJ0061301	1	
3	TAPE,DECO [UPPER]	MTAA0178901	1	
2	DECO,FOLDER [UPPER]	MDAE0045701	1	
1	COVER,FOLDER UPPER	MCJJ00565##	1	-

Copyright © 2009 LG Electronics. Inc. All right reserved.
Only for training and service purposes

LGE Internal Use Only

ASS'Y EXPLODED VIEW

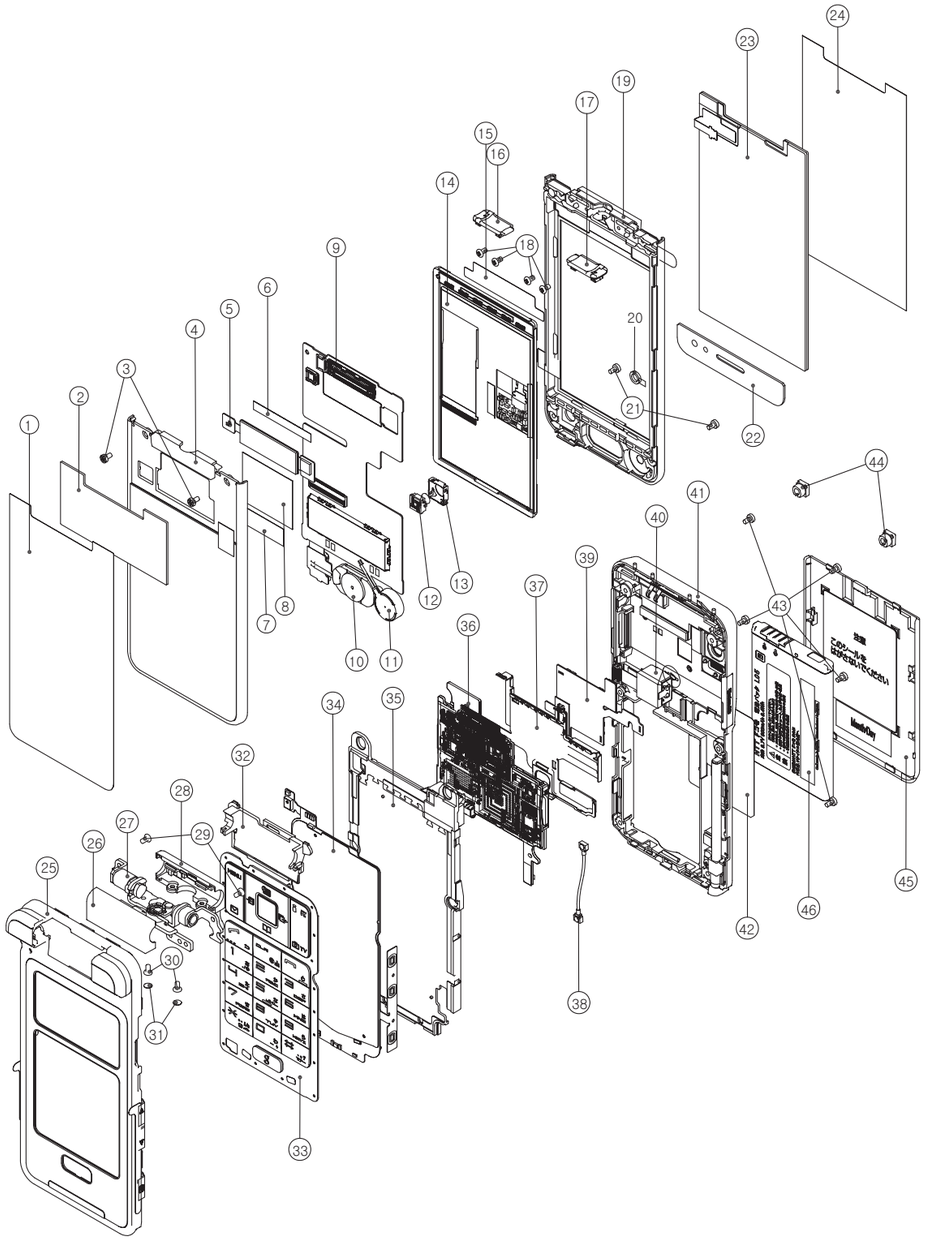

##	COLOR
01	WHITE
02	SILVER
03	RED

No	Part Name	Part Number	Q'ty	Remark
46	BATTERY,PACK	SBPL0099601	1	
45	COVER, ASSY BATTERY	ACGA00303##	1	
44	CAP,SCREW [REAR]	MCCH01452##	2	
43	SCREW MACHINE,BIND	GMZZ0018702	6	(L3.0*H0.9)_STAR
42	LABEL,APPROVAL	MLAA0060401	1	
41	COVER ASSY,REAR	ACGM01274##	1	
40	CAMERA [5M]	SVCY0020801	1	
39	PCB ASSY,FLEXIBLE[SUB]	SACY0097601	1	
38	CABLE,COAXIAL [RETRACTABLE]	SWCC0006401	1	
37	CAN ASSY,SHIELD[MAIN]	ACKA0015301	1	
36	PCB ASSY,MAIN	SAFF0215101	1	
35	BRACKET ASS'Y [PCB]	ABFZ0018001	1	
34	PCB ASSY,FLEXIBLE[KEYPAD]	SACY0084901	1	
33	BUTTON ASSY, MAIN	ABGF0012201	1	
32	DECO [FRONT HINGE]	MDAY00415##	1	
31	TAPE [HINGE COVER]_SCREW	MTAZ02284##	2	
30	SCREW MACHINE,BIND	GMEY0012901	2	(L2.5*H0.4)
29	SCREW MACHINE,BIND	GMEY0012901	2	(L2.5*H0.4)
28	COVER,HINGE [LOWER]	MCJT00025##	1	
27	WIRE ASSY[FOLDER]	SWWA0060402	1	
26	COVER,HINGE [UPPER]	MCJU00032##	1	
25	COVER ASSY,FRONT	ACGK01287##	1	
24	TAPE,PROTECTION [WINDOW LCD]	MTAB0309001	1	
23	WINDOW,LCD [TOUCH]	MWAC0113001	1	
22	DECO,SPEAKER	MDAN0016401	1	
21	SCREW MACHINE,BIND	GMZZ0018702	2	(L3.0*H0.9)_STAR
20	PAD,CAMERA [VGA]	MPBT0070301	1	
19	COVER,ASSY FOLDER [LOWER]	ACGH00567##	1	
18	SCREW MACHINE,BIND	GMEY0011201	4	(L3.0*H0.6)
17	PAD [RIGHT]	MPBZ0022430	1	
16	PAD [LEFT]	MPBZ0022420	1	
15	GASKET [LCD DRIVER IC]	MGAD0195701	1	
14	MODULE, LCD	SVLM0030101	1	
13	CONN,SOCKET	ENSY0021802	1	
12	CAMERA [VGA]	SVCY0020601	1	
11	MOTOR	SJMY0008504	1	
10	SPEAKER & RECEIVER	SUSY0028008	1	
9	PCB ASSY,FLEXIBLE[FOLDER]	SACY0084801	1	
8	GASKET [LCD FPCB]	MGAD0195801	1	
7	TAPE,PROTECTION [CON. LCD]	MTAB0309201	1	
6	GASKET [FOLDER FPCB CON.]	MGAD0195901	1	
5	MODULE,ETC[LED]	SMZY0022201	1	
4	COVER,ASSY FOLDER [UPPER]	ACGJ00741##	1	
3	SCREW MACHINE,BIND	GMZZ0018702	2	
2	WINDOW [LED]	MWAZ0007301	1	
1	TAPE,PROTECTION [FOLDER UPPER]	MTAB0308801	1	

Copyright © 2009 LG Electronics. Inc. All right reserved.
Only for training and service purposes

11.2 Replacement Parts
<Mechanic component>

Note: This Chapter is used for reference, Part order is ordered by SBOM standard on GCSC

Level	Location No.	Description	Part Number	Spec	Color	Remark
2	AAAY00	ADDITION	AAAY0400701		HYPER WHITE	
3	ACGA00	COVER ASSY,BATTERY	ACGA0030301		HYPER WHITE	S'
4	MBAZ	BAG	MBAZ0007101	COMPLEX, (empty), , , , ,	WITHOUT COLOR	
4	MCJA00	COVER,BATTERY	MCJA0080501	MOLD, PC LUPOY SC-1004A, , , , ,	HYPER WHITE	82
4	MLAZ00	LABEL	MLAZ0052101	COMPLEX, (empty), , , , ,	WITHOUT COLOR	77
4	MPFM00	PLATE,FERRITE	MPFM0001401	COMPLEX, (empty), , , , ,	WITHOUT COLOR	83
3	AMBA00	MANUAL ASSY,OPERATION	AMBA0152601	L-06A manual assy for NTT_Japanese language	WITHOUT COLOR	
4	ADEY00	DATA KIT	ADEY0026802	L-06A data kir fot NTT	WITHOUT COLOR	
5	MCHZ00	COMPACT DISK	MCHZ0073702	PRINTING, (empty), , , , ,	WITHOUT COLOR	
5	MEAY00	ENVELOPE	MEAY0000403	PRINTING, (empty), , , , ,	WITHOUT COLOR	
5	MMBB00	MANUAL,OPERATION	MMBB0339203	PRINTING, (empty), , , , ,	WITHOUT COLOR	
4	MCDE00	CARD,SERVICE GUIDE	MCDE0004902	PRINTING, (empty), , , , ,	WITHOUT COLOR	
4	MCDZ00	CARD	MCDZ0010602	PRINTING, (empty), , , , ,	WITHOUT COLOR	
4	MMBB00	MANUAL,OPERATION	MMBB0339201	PRINTING, (empty), , , , ,	WITHOUT COLOR	
3	MCDF00	CARD,WARRANTY	MCDF0010902	PRINTING, (empty), , , , ,	WITHOUT COLOR	
2	APAY00	PACKAGE	APAY0103230	L-06A NTT-HT(MB-L 2ea/PL 1ea/S-L 2ea/Ribbon/MB-Pad/Void Peel)	HYPER WHITE	
3	APLY00	PALLET ASSY	APLY0003308	NTT Palletizing-720ea	WITHOUT COLOR	
4	MBAD00	BAG,VINYL(PE)	MBAD0003101	1700*1700*0.04t	Without Color	
4	MPCY00	PALLET	MPCY0017602	COMPLEX, (empty), , , , ,	WITHOUT COLOR	

Copyright © 2009 LG Electronics. Inc. All right reserved.
Only for training and service purposes

LGE Internal Use Only

11. EXPLODED VIEW & REPLACEMENT PART LIST

Level	Location No.	Description	Part Number	Spec	Color	Remark
3	MBAD00	BAG,VINYL(PE)	MBAD0005204	COMPLEX, (empty), , , , ,	Without Color	
3	MLAC00	LABEL,BARCODE	MLAC0003017	PRINTING, (empty), , , , ,	Without Color	
3	MLAQ00	LABEL,UNIT BOX	MLAQ0012809	PRINTING, (empty), , , , ,	METAL SILVER	
3	MLAZ00	LABEL	MLAZ0050901	PRINTING, (empty), , , , ,	WITHOUT COLOR	
3	MPAD00	PACKING,SHELL	MPAD0006807	COMPLEX, (empty), , , , ,	WITHOUT COLOR	
3	MTAZ00	TAPE	MTAZ0127608	COMPLEX, (empty), , , , ,	WITHOUT COLOR	
2	APEY	PHONE	APEY0716501		HYPER WHITE	
3	ACGG00	COVER ASSY,FOLDER	ACGG0097301		HYPER WHITE	
4	ABFZ00	BRACKET ASSY	ABFZ0018001	Bracket Ass'y PCB	WITHOUT COLOR	I'
5	MBFZ00	BRACKET	MBFZ0033801	CASTING, Al Alloy, , , , ,	WITHOUT COLOR	53
5	MGAD00	GASKET,SHIELD FORM	MGAD0197301	COMPLEX, (empty), , , , ,	WITHOUT COLOR	
5	MTAK00	TAPE,CAMERA	MTAK0020901	COMPLEX, (empty), , , , ,	WITHOUT COLOR	49
6	MGAD	GASKET,SHIELD FORM	MGAD0197301	COMPLEX, (empty), , , , ,	WITHOUT COLOR	
4	ABGF00	BUTTON ASSY,MAIN	ABGF0012201		WITHOUT COLOR	G', 50
4	ACGH00	COVER ASSY,FOLDER(LOWER)	ACGH0056701	dicasting	HYPER WHITE	S
5	MCJH00	COVER,FOLDER(LOWER)	MCJH0046501	CASTING, Mg Alloy, , , , ,	HYPER WHITE	18
5	MDAY00	DECO	MDAY0041401	MOLD, PC LUPOY SC-1004A, , , , ,	WITHOUT COLOR	25
5	MMAA00	MAGNET,SWITCH	MMAA0012201	COMPLEX, (empty), , , , ,	WITHOUT COLOR	16
5	MPBN00	PAD,SPEAKER	MPBN0067601	COMPLEX, (empty), , , , ,	WITHOUT COLOR	21
5	MTAA00	TAPE,DECO	MTAA0179201	COMPLEX, (empty), , , , ,	WITHOUT COLOR	24
5	MTAB00	TAPE,PROTECTION	MTAB0285501	COMPLEX, (empty), , , , ,	WITHOUT COLOR	23

Copyright © 2009 LG Electronics. Inc. All right reserved.
Only for training and service purposes

Level	Location No.	Description	Part Number	Spec	Color	Remark
5	MTAD00	TAPE,WINDOW	MTAD0100301	COMPLEX, (empty), , , , ,	WITHOUT COLOR	20
5	MTAF00	TAPE,MOTOR	MTAF0025101	COMPLEX, (empty), , , , ,	WITHOUT COLOR	22
5	MTAZ00	TAPE	MTAZ0127701	removal tape	Without Color	
5	MTAZ01	TAPE	MTAZ0244801	COMPLEX, (empty), , , , ,	WITHOUT COLOR	
5	MWAG00	WINDOW,IRDA	MWAG0019701	MOLD, PC LEXAN 121R, , , , ,	WITHOUT COLOR	19
4	ACGJ00	COVER ASSY,FOLDER(UPPER)	ACGJ0074101		HYPER WHITE	
5	MCJJ00	COVER,FOLDER(UPPER)	MCJJ0056501	MOLD, PC LUPOY SC-1004A, , , , ,	HYPER WHITE	1
6	MICC	INSERT,FRONT(UPPER)	MICC0008201		COLOR UNFIXED	
5	MDAE00	DECO,FOLDER(UPPER)	MDAE0045701	CASTING, Al Alloy, , , , ,	WITHOUT COLOR	2
5	MPBJ00	PAD,MOTOR	MPBJ0061301	COMPLEX, (empty), , , , ,	WITHOUT COLOR	4
5	MPBN00	PAD,SPEAKER	MPBN0067501	COMPLEX, (empty), , , , ,	WITHOUT COLOR	5
5	MTAA01	TAPE,DECO	MTAA0178901	COMPLEX, (empty), , , , ,	WITHOUT COLOR	3
5	MTAZ00	TAPE	MTAZ0127701	removal tape	Without Color	
4	ACGK00	COVER ASSY,FRONT	ACGK0128701		HYPER WHITE	Y
5	MBJL00	BUTTON,SIDE	MBJL0078201	COMPLEX, (empty), , , , ,	WITHOUT COLOR	37
5	MBJL01	BUTTON,SIDE	MBJL0078101	COMPLEX, (empty), , , , ,	WITHOUT COLOR	36
5	MCJK00	COVER,FRONT	MCJK0100101	MOLD, PC LUPOY SC-1004A, , , , ,	HYPER WHITE	34
6	MICA00	INSERT,FRONT	MICA0013901	2.2X4.0	Without Color	
6	MICC00	INSERT,FRONT(UPPER)	MICC0010001	D2.2 L2.0 KURL 45	Gold	
5	MDAG00	DECO,FRONT	MDAG0045701	CASTING, Al Alloy, , , , ,	WITHOUT COLOR	40
5	MDAG01	DECO,FRONT	MDAG0045501	MOLD, PC LUPOY SC-1004A, , , , ,	WITHOUT COLOR	35

Copyright © 2009 LG Electronics. Inc. All right reserved.
Only for training and service purposes

LGE Internal Use Only

Level	Location No.	Description	Part Number	Spec	Color	Remark
5	MDAG02	DECO,FRONT	MDAG0045601	CASTING, Al Alloy, , , , ,	WITHOUT COLOR	39
5	MFBD00	FILTER,MIKE	MFBD0036501	COMPLEX, (empty), , , , ,	WITHOUT COLOR	43
5	MSGC00	STOPPER,FOLDER	MSGC0008001	MOLD, Urethane Rubber S195A, , , , ,	WITHOUT COLOR	38
5	MTAA00	TAPE,DECO	MTAA0179501	COMPLEX, (empty), , , , ,	WITHOUT COLOR	45
5	MTAA01	TAPE,DECO	MTAA0179301	COMPLEX, (empty), , , , ,	WITHOUT COLOR	41
5	MTAA02	TAPE,DECO	MTAA0179401	COMPLEX, (empty), , , , ,	WITHOUT COLOR	44
5	MTAB00	TAPE,PROTECTION	MTAB0285701	COMPLEX, (empty), , , , ,	WITHOUT COLOR	46
5	MTAB01	TAPE,PROTECTION	MTAB0285601	COMPLEX, (empty), , , , ,	WITHOUT COLOR	47
5	MTAZ01	TAPE	MTAZ0238001	COMPLEX, (empty), , , , ,	WITHOUT COLOR	42
4	GMEY00	SCREW MACHINE,BIND	GMEY0011201	1.4 mm,3 mm,MSWR3(BK) ,N ,+ ,NYLOK	WITHOUT COLOR	R
4	GMEY01	SCREW MACHINE,BIND	GMEY0012901	1.4 mm,2.5 mm,MSWR3 ,B ,+ ,	Silver	C', D' , 87, 88
4	GMZZ00	SCREW MACHINE	GMZZ0018702	1.4 mm,3.0 mm,MSWR3(BK) ,N ,STR ,- ,NYLOK COATED M1.4x3.0, 2.7phi 1.0t)	Black	Q'
4	MCJT	COVER,HINGE(LOWER)	MCJT0002501	MOLD, PC LUPOY SC-1004A, , , , ,	WITHOUT COLOR	B', 29
4	MCJU	COVER,HINGE(UPPER)	MCJU0003201	MOLD, PC LUPOY SC-1004A, , , , ,	WITHOUT COLOR	Z, 28
4	MDAN00	DECO,SPEAKER	MDAN0016401	CUTTING, PMMA MR 200, , , , ,	WITHOUT COLOR	V, 31
4	MDAY	DECO	MDAY0041501	MOLD, PC LUPOY SC-1004A, , , , ,	WITHOUT COLOR	F', 48
4	MGAD00	GASKET,SHIELD FORM	MGAD0195701	COMPLEX, (empty), , , , ,	WITHOUT COLOR	O, 17
4	MGAD01	GASKET,SHIELD FORM	MGAD0195801	COMPLEX, (empty), , , , ,	WITHOUT COLOR	H, 10
4	MGAD02	GASKET,SHIELD FORM	MGAD0195901	COMPLEX, (empty), , , , ,	WITHOUT COLOR	F
4	MGAD03	GASKET,SHIELD FORM	MGAD0196001	COMPLEX, (empty), , , , ,	WITHOUT COLOR	
4	MPBT00	PAD,CAMERA	MPBT0070301	COMPLEX, (empty), , , , ,	WITHOUT COLOR	T, 27

Copyright © 2009 LG Electronics. Inc. All right reserved.
Only for training and service purposes

Level	Location No.	Description	Part Number	Spec	Color	Remark
4	MPBZ00	PAD	MPBZ0224201	MOLD, Urethane Rubber S195A, , , , ,	WITHOUT COLOR	P, 14
4	MPBZ01	PAD	MPBZ0224301	MOLD, Urethane Rubber S195A, , , , ,	WITHOUT COLOR	Q, 15
4	MTAB01	TAPE,PROTECTION	MTAB0308801	COMPLEX, (empty), , , , ,	WITHOUT COLOR	A, 92
4	MTAB02	TAPE,PROTECTION	MTAB0309001	COMPLEX, (empty), , , , ,	WITHOUT COLOR	X
4	MTAB04	TAPE,PROTECTION	MTAB0309201	COMPLEX, (empty), , , , ,	WITHOUT COLOR	G, 11
5	MTAB	TAPE,PROTECTION	MTAB0309001	COMPLEX, (empty), , , , ,	WITHOUT COLOR	33
4	MTAZ	TAPE	MTAZ0228401	COMPLEX, (empty), , , , ,	WITHOUT COLOR	E', 32
4	MWAC	WINDOW,LCD	MWAC0113001	COMPLEX, (empty), , , , ,	WITHOUT COLOR	W, 26
4	MWAZ00	WINDOW	MWAZ0007301	CUTTING, PMMA MR 200, , , , ,	WITHOUT COLOR	B, 6
6	ACKA00	CAN ASSY,SHIELD	ACKA0018901	CAN ASS'Y SHIELD FOLDER	WITHOUT COLOR	7
7	MCBA00	CAN,SHIELD	MCBA0050501	PRESS, STS, 0.2T, , , ,	WITHOUT COLOR	
7	MTAB00	TAPE,PROTECTION	MTAB0332401	COMPLEX, (empty), , , , ,	WITHOUT COLOR	
6	ADCA00	DOME ASSY,METAL	ADCA0094901		WITHOUT COLOR	51
7	CN702	TERMINAL,GROUND	MTCA0002701	PRESS, BeCu, , , , ,	WITHOUT COLOR	
5	MHFD	HINGE,FOLDER	MHFD0017001	PRESS, STS, , , , ,	WITHOUT COLOR	30
3	ACGM00	COVER ASSY,REAR	ACGM0127401		HYPER WHITE	O'
4	GMEY00	SCREW MACHINE,BIND	GMEY0012901	1.4 mm,2.5 mm,MSWR3 ,B ,+ ,	Silver	
4	MCCE00	CAP,RECEPTACLE	MCCE0048701	COMPLEX, (empty), , , , ,	HYPER WHITE	60
4	MCCF00	CAP,MOBILE SWITCH	MCCF0061901	COMPLEX, (empty), , , , ,	WITHOUT COLOR	65
4	MCCG00	CAP,MULTIMEDIA CARD	MCCG0018301	COMPLEX, (empty), , , , ,	HYPER WHITE	62
4	MCJN00	COVER,REAR	MCJN0096901	MOLD, PC LUPOY SC-1004A, , , , ,	HYPER WHITE	59

Copyright © 2009 LG Electronics. Inc. All right reserved.
Only for training and service purposes

LGE Internal Use Only

Level	Location No.	Description	Part Number	Spec	Color	Remark
5	MICC00	INSERT,FRONT(UPPER)	MICC0010001	D2.2 L2.0 KURL 45	Gold	
4	MDAD00	DECO,CAMERA	MDAD0043801	PRESS, STS, , , , ,	WITHOUT COLOR	63
4	MGAD00	GASKET,SHIELD FORM	MGAD0193401	COMPLEX, (empty), , , , ,	WITHOUT COLOR	73
4	MGAD01	GASKET,SHIELD FORM	MGAD0193701	COMPLEX, (empty), , , , ,	WITHOUT COLOR	74
4	MLAB00	LABEL,A/S	MLAB0003601	COMPLEX, (empty), , , , ,	WITHOUT COLOR	79
4	MLCE00	LENS,FLASH	MLCE0012001	MOLD, PC LEXAN 141R, , , , ,	WITHOUT COLOR	61
4	MPBT00	PAD,CAMERA	MPBT0070401	COMPLEX, (empty), , , , ,	WITHOUT COLOR	66
4	MPBU00	PAD,CONNECTOR	MPBU0054901	COMPLEX, (empty), , , , ,	WITHOUT COLOR	69
4	MPBU01	PAD,CONNECTOR	MPBU0076901	COMPLEX, (empty), , , , ,	WITHOUT COLOR	
4	MPBU02	PAD,CONNECTOR	MPBU0077001	COMPLEX, (empty), , , , ,	WITHOUT COLOR	
4	MPBZ00	PAD	MPBZ0231501	COMPLEX, (empty), , , , ,	WITHOUT COLOR	67
4	MPBZ01	PAD	MPBZ0231601	COMPLEX, (empty), , , , ,	WITHOUT COLOR	68
4	MTAA00	TAPE,DECO	MTAA0179601	COMPLEX, (empty), , , , ,	WITHOUT COLOR	75
4	MTAB01	TAPE,PROTECTION	MTAB0309401	COMPLEX, (empty), , , , ,	WITHOUT COLOR	78
4	MTAD00	TAPE,WINDOW	MTAD0100501	COMPLEX, (empty), , , , ,	WITHOUT COLOR	76
4	MWAE00	WINDOW,CAMERA	MWAE0043901	CUTTING, Tempered Glass, , , , ,	WITHOUT COLOR	64
3	GMZZ00	SCREW MACHINE	GMZZ0018702	1.4 mm,3.0 mm,MSWR3(BK) ,N ,STR ,- ,NYLOK COATED M1.4x3.0, 2.7phi 1.0t)	Black	C, U, 86
3	MCCH00	CAP,SCREW	MCCH0145201	COMPLEX, (empty), , , , ,	HYPER WHITE	R', 81
3	MLAA	LABEL,APPROVAL	MLAA0060401	COMPLEX, (empty), , , , ,	WITHOUT COLOR	P', 80
5	ACKA00	CAN ASSY,SHIELD	ACKA0015301	BTM	WITHOUT COLOR	K', 56
6	MFEA	FRAME,SHIELD	MFEA0027601	COMPLEX, (empty), , , , ,	WITHOUT COLOR	

Copyright © 2009 LG Electronics. Inc. All right reserved.
Only for training and service purposes

Level	Location No.	Description	Part Number	Spec	Color	Remark
6	MTAC	TAPE,SHIELD	MTAC0090901	COMPLEX, (empty), , , , ,	WITHOUT COLOR	57
8	CN701	TERMINAL,GROUND	MTCA0002701	PRESS, BeCu, , , , ,	WITHOUT COLOR	
8	CN702	TERMINAL,GROUND	MTCA0002701	PRESS, BeCu, , , , ,	WITHOUT COLOR	
5	MLAZ00	LABEL	MLAZ0038301	PID Label 4 Array	WITHOUT COLOR	

Copyright © 2009 LG Electronics. Inc. All right reserved.
Only for training and service purposes

LGE Internal Use Only

11.2 Replacement Parts
<Main component>

Note: This Chapter is used for reference, Part order is ordered by SBOM standard on GCSC

Level	Location No.	Description	Part Number	Spec	Color	Remark
1		IMT,FOLDER	TIFF0018503		HYPER WHITE	
4	ENSY00	CONN,SOCKET	ENSY0021802	20 ,ETC ,cover ,.6 mm,		M
4	SACY00	PCB ASSY,FLEXIBLE	SACY0084801	L-06A Folder FPCB		I, 12
5	SACB00	PCB ASSY,FLEXIBLE,INSERT	SACB0056601			
5	SACE00	PCB ASSY,FLEXIBLE,SMT	SACE0078701			
6	SACC00	PCB ASSY,FLEXIBLE,SMT BOTTOM	SACC0054601			
7	S100	CONN,SOCKET	ENSY0021801	20 ,ETC ,socket ,.6 mm,		
7	U103	IC	EUSY0343701	WSOF6 ,6 PIN,R/TP ,Luminance sensor ,; ,IC,A/D Converter		
7	U201	IC	EUSY0240401	IrDA ,7 PIN,R/TP ,IrIC		
6	SACD00	PCB ASSY,FLEXIBLE,SMT TOP	SACD0067801			
7	C100	CAP,CERAMIC,CHIP	ECCH0000182	0.1 uF,10V ,K ,X5R ,HD ,1005 ,R/TP		
7	C101	CAP,CERAMIC,CHIP	ECCH0007802	4.7 uF,10V ,M ,X5R ,TC ,1608 ,R/TP		
7	C102	CAP,CERAMIC,CHIP	ECCH0000182	0.1 uF,10V ,K ,X5R ,HD ,1005 ,R/TP		
7	C103	CAP,CERAMIC,CHIP	ECCH0007802	4.7 uF,10V ,M ,X5R ,TC ,1608 ,R/TP		
7	C104	CAP,CERAMIC,CHIP	ECCH0000182	0.1 uF,10V ,K ,X5R ,HD ,1005 ,R/TP		
7	C105	CAP,CERAMIC,CHIP	ECCH0007802	4.7 uF,10V ,M ,X5R ,TC ,1608 ,R/TP		
7	C106	CAP,CERAMIC,CHIP	ECCH0000182	0.1 uF,10V ,K ,X5R ,HD ,1005 ,R/TP		
7	C107	CAP,CERAMIC,CHIP	ECCH0007802	4.7 uF,10V ,M ,X5R ,TC ,1608 ,R/TP		
7	C108	CAP,CERAMIC,CHIP	ECCH0004904	1 uF,6.3V ,K ,X5R ,TC ,1005 ,R/TP		
7	C109	CAP,CERAMIC,CHIP	ECCH0004904	1 uF,6.3V ,K ,X5R ,TC ,1005 ,R/TP		
7	C111	CAP,CHIP,MAKER	ECZH0001215	1 uF,10V ,K ,X5R ,TC ,1005 ,R/TP		
7	C112	CAP,CERAMIC,CHIP	ECCH0000182	0.1 uF,10V ,K ,X5R ,HD ,1005 ,R/TP		
7	C113	CAP,CERAMIC,CHIP	ECCH0007802	4.7 uF,10V ,M ,X5R ,TC ,1608 ,R/TP		
7	C114	CAP,CERAMIC,CHIP	ECCH0006201	4.7 uF,6.3V ,K ,X5R ,TC ,1608 ,R/TP		
7	C115	CAP,CERAMIC,CHIP	ECCH0007802	4.7 uF,10V ,M ,X5R ,TC ,1608 ,R/TP		

Copyright © 2009 LG Electronics. Inc. All right reserved.
Only for training and service purposes

Level	Location No.	Description	Part Number	Spec	Color	Remark
7	C116	CAP,CERAMIC,CHIP	ECCH0000182	0.1 uF,10V ,K ,X5R ,HD ,1005 ,R/TP		
7	C117	CAP,CERAMIC,CHIP	ECCH0007802	4.7 uF,10V ,M ,X5R ,TC ,1608 ,R/TP		
7	C118	CAP,CERAMIC,CHIP	ECCH0000182	0.1 uF,10V ,K ,X5R ,HD ,1005 ,R/TP		
7	C119	CAP,CERAMIC,CHIP	ECCH0007802	4.7 uF,10V ,M ,X5R ,TC ,1608 ,R/TP		
7	C120	CAP,CERAMIC,CHIP	ECCH0000182	0.1 uF,10V ,K ,X5R ,HD ,1005 ,R/TP		
7	C121	CAP,CHIP,MAKER	ECZH0001215	1 uF,10V ,K ,X5R ,TC ,1005 ,R/TP		
7	C122	CAP,CHIP,MAKER	ECZH0001215	1 uF,10V ,K ,X5R ,TC ,1005 ,R/TP		
7	C124	CAP,CERAMIC,CHIP	ECCH0000198	2.2 uF,6.3V ,M ,X5R ,TC ,1005 ,R/TP		
7	C125	CAP,CERAMIC,CHIP	ECCH0000198	2.2 uF,6.3V ,M ,X5R ,TC ,1005 ,R/TP		
7	C126	CAP,CERAMIC,CHIP	ECCH0000198	2.2 uF,6.3V ,M ,X5R ,TC ,1005 ,R/TP		
7	C127	CAP,CERAMIC,CHIP	ECCH0000198	2.2 uF,6.3V ,M ,X5R ,TC ,1005 ,R/TP		
7	C128	CAP,CERAMIC,CHIP	ECCH0004904	1 uF,6.3V ,K ,X5R ,TC ,1005 ,R/TP		
7	C129	CAP,CERAMIC,CHIP	ECCH0000151	4.7 nF,25V,K,X7R,HD,1005,R/TP		
7	C130	CAP,CERAMIC,CHIP	ECCH0000155	10 nF,16V,K,X7R,HD,1005,R/TP		
7	C131	CAP,CHIP,MAKER	ECZH0001215	1 uF,10V ,K ,X5R ,TC ,1005 ,R/TP		
7	C132	CAP,CHIP,MAKER	ECZH0001215	1 uF,10V ,K ,X5R ,TC ,1005 ,R/TP		
7	C133	CAP,CERAMIC,CHIP	ECCH0000185	5.6 pF,50V ,C ,NP0 ,TC ,1005 ,R/TP		
7	C134	CAP,CERAMIC,CHIP	ECCH0000185	5.6 pF,50V ,C ,NP0 ,TC ,1005 ,R/TP		
7	C135	CAP,CHIP,MAKER	ECZH0001120	3900 pF,50V ,K ,X7R ,HD ,1005 ,R/TP		
7	C136	CAP,CERAMIC,CHIP	ECCH0004904	1 uF,6.3V ,K ,X5R ,TC ,1005 ,R/TP		
7	C137	CAP,CHIP,MAKER	ECZH0001215	1 uF,10V ,K ,X5R ,TC ,1005 ,R/TP		
7	C138	CAP,CHIP,MAKER	ECZH0001215	1 uF,10V ,K ,X5R ,TC ,1005 ,R/TP		
7	C139	CAP,CHIP,MAKER	ECZH0001215	1 uF,10V ,K ,X5R ,TC ,1005 ,R/TP		
7	C140	CAP,CHIP,MAKER	ECZH0003103	0.1 uF,10V ,K ,X7R ,HD ,1005 ,R/TP		
7	C141	CAP,CHIP,MAKER	ECZH0003103	0.1 uF,10V ,K ,X7R ,HD ,1005 ,R/TP		
7	C200	CAP,CERAMIC,CHIP	ECCH0004904	1 uF,6.3V ,K ,X5R ,TC ,1005 ,R/TP		
7	C201	CAP,CHIP,MAKER	ECZH0003103	0.1 uF,10V ,K ,X7R ,HD ,1005 ,R/TP		
7	C202	CAP,CHIP,MAKER	ECZH0001217	470 nF,6.3V ,K ,X5R ,TC ,1005 ,R/TP		
7	C203	CAP,CHIP,MAKER	ECZH0001215	1 uF,10V ,K ,X5R ,TC ,1005 ,R/TP		
7	C204	CAP,CHIP,MAKER	ECZH0001215	1 uF,10V ,K ,X5R ,TC ,1005 ,R/TP		

Copyright © 2009 LG Electronics. Inc. All right reserved.
Only for training and service purposes

LGE Internal Use Only

Level	Location No.	Description	Part Number	Spec	Color	Remark
7	C205	CAP,CERAMIC,CHIP	ECCH0000198	2.2 uF,6.3V ,M ,X5R ,TC ,1005 ,R/TP		
7	C206	CAP,CERAMIC,CHIP	ECCH0000198	2.2 uF,6.3V ,M ,X5R ,TC ,1005 ,R/TP		
7	C207	CAP,CERAMIC,CHIP	ECCH0005604	10000000 pF,6.3V ,M ,X5R ,TC ,1608 ,R/TP , , ,[empty] ,[empty] ,[empty] ,[empty] ,[empty] ,[empty] ,0.8 mm		
7	C208	CAP,CERAMIC,CHIP	ECCH0009106	10 nF,16V ,K ,X7R ,TC ,0603 ,R/TP		
7	C209	CAP,CERAMIC,CHIP	ECCH0009101	0.1 uF,6.3V ,K ,X5R ,TC ,0603 ,R/TP		
7	C210	CAP,CERAMIC,CHIP	ECCH0000143	1 nF,50V,K,X7R,HD,1005,R/TP		
7	C211	CAP,CHIP,MAKER	ECZH0001215	1 uF,10V ,K ,X5R ,TC ,1005 ,R/TP		
7	C212	CAP,CHIP,MAKER	ECZH0003103	0.1 uF,10V ,K ,X7R ,HD ,1005 ,R/TP		
7	C213	CAP,CHIP,MAKER	ECZH0003103	0.1 uF,10V ,K ,X7R ,HD ,1005 ,R/TP		
7	CN200	CONNECTOR,FFC/FPC	ENQY0008602	6 PIN,0.5 mm,ETC ,AU ,H:1.2MM		
7	CN201	CONNECTOR,BOARD TO BOARD	ENBY0018601	10 PIN,.4 mm,STRAIGHT , ,H=0.9, SOCKET		
7	CN203	CONNECTOR,FFC/FPC	ENQY0014601	49 PIN,0.3 mm,ANGLE , , ,; , ,0.30MM ,FFC/FPC ,ANGLE ,BOTH ,SMD ,[empty] ,LOCKING ,		
7	CN204	CONNECTOR,BOARD TO BOARD	ENBY0048201	40 ,0.4 mm,ETC , ,H=1.15(max.) ,; , ,0.40MM ,[empty] ,[empty] ,[empty] ,[empty] , ,		
7	CN205	CONNECTOR,ETC	ENZY0025701	2 , mm,ETC , ,Shield can clip (0.2t SUS based)		
7	CN206	CONNECTOR,ETC	ENZY0025701	2 , mm,ETC , ,Shield can clip (0.2t SUS based)		
7	CN207	CONNECTOR,ETC	ENZY0025701	2 , mm,ETC , ,Shield can clip (0.2t SUS based)		
7	CN208	CONNECTOR,ETC	ENZY0025701	2 , mm,ETC , ,Shield can clip (0.2t SUS based)		
7	CN209	CONNECTOR,ETC	ENZY0025701	2 , mm,ETC , ,Shield can clip (0.2t SUS based)		
7	CN210	CONNECTOR,ETC	ENZY0025701	2 , mm,ETC , ,Shield can clip (0.2t SUS based)		
7	D200	DIODE,TVS	EDTY0008606	DFN-2 ,7.82 V,150 mW,R/TP ,PB-FREE		
7	D201	DIODE,TVS	EDTY0008606	DFN-2 ,7.82 V,150 mW,R/TP ,PB-FREE		
7	D202	DIODE,TVS	EDTY0008606	DFN-2 ,7.82 V,150 mW,R/TP ,PB-FREE		
7	D203	DIODE,TVS	EDTY0008606	DFN-2 ,7.82 V,150 mW,R/TP ,PB-FREE		
7	D204	DIODE,TVS	EDTY0008606	DFN-2 ,7.82 V,150 mW,R/TP ,PB-FREE		
7	D205	DIODE,TVS	EDTY0008606	DFN-2 ,7.82 V,150 mW,R/TP ,PB-FREE		
7	FB100	FILTER,BEAD,CHIP	SFBH0008101	600 ohm,1005 ,		
7	FB101	FILTER,BEAD,CHIP	SFBH0008101	600 ohm,1005 ,		
7	FL201	FILTER,EMI/POWER	SFEY0015101	SMD ,Pb-free_8ch_TVS_EMI_ESD ,; ,Filter,LCR		

Copyright © 2009 LG Electronics. Inc. All right reserved.
Only for training and service purposes

Level	Location No.	Description	Part Number	Spec	Color	Remark
7	FL202	FILTER,EMI/POWER	SFEY0015101	SMD ,Pb-free_8ch_TVS_EMI_ESD ,; ,Filter,LCR		
7	FL203	FILTER,EMI/POWER	SFEY0015101	SMD ,Pb-free_8ch_TVS_EMI_ESD ,; ,Filter,LCR		
7	FL204	FILTER,EMI/POWER	SFEY0011701	SMD ,SMD ,18 V,4ch. EMI_ESD Filter (10 Ohm,7.5pF)		
7	Q1	TR,BJT,ARRAY	EQBA0000602	TESV ,200 mW,R/TP ,EPITAXIAL PLANAR NPN/PNP TRANSISTOR		
7	R108	RES,CHIP,MAKER	ERHZ0000401	0 ohm,1/16W ,J ,1005 ,R/TP		
7	R109	RES,CHIP,MAKER	ERHZ0000405	10 Kohm,1/16W ,J ,1005 ,R/TP		
7	R110	RES,CHIP,MAKER	ERHZ0000401	0 ohm,1/16W ,J ,1005 ,R/TP		
7	R113	RES,CHIP,MAKER	ERHZ0000401	0 ohm,1/16W ,J ,1005 ,R/TP		
7	R114	RES,CHIP,MAKER	ERHZ0000405	10 Kohm,1/16W ,J ,1005 ,R/TP		
7	R115	RES,CHIP,MAKER	ERHZ0000405	10 Kohm,1/16W ,J ,1005 ,R/TP		
7	R116	RES,CHIP,MAKER	ERHZ0000401	0 ohm,1/16W ,J ,1005 ,R/TP		
7	R119	RES,CHIP,MAKER	ERHZ0000201	100 ohm,1/16W ,F ,1005 ,R/TP		
7	R121	RES,CHIP,MAKER	ERHZ0000401	0 ohm,1/16W ,J ,1005 ,R/TP		
7	R123	RES,CHIP,MAKER	ERHZ0000201	100 ohm,1/16W ,F ,1005 ,R/TP		
7	R125	RES,CHIP,MAKER	ERHZ0000405	10 Kohm,1/16W ,J ,1005 ,R/TP		
7	R129	RES,CHIP,MAKER	ERHZ0000267	3300 ohm,1/16W ,F ,1005 ,R/TP		
7	R130	RES,CHIP	ERHY0000254	4.7K ohm,1/16W,J,1005,R/TP		
7	R134	RES,CHIP	ERHY0011601	11 Kohm,1/16W ,F ,1005 ,R/TP		
7	R135	RES,CHIP,MAKER	ERHZ0000406	100 Kohm,1/16W ,J ,1005 ,R/TP		
7	R136	RES,CHIP,MAKER	ERHZ0000205	1 Mohm,1/16W ,F ,1005 ,R/TP		
7	R137	RES,CHIP,MAKER	ERHZ0000513	820 ohm,1/16W ,J ,1005 ,R/TP		
7	R138	RES,CHIP,MAKER	ERHZ0000405	10 Kohm,1/16W ,J ,1005 ,R/TP		
7	R139	RES,CHIP	ERHY0000161	200K ohm,1/16W,F,1005,R/TP		
7	R140	RES,CHIP,MAKER	ERHZ0000201	100 ohm,1/16W ,F ,1005 ,R/TP		
7	R201	RES,CHIP	ERHY0000254	4.7K ohm,1/16W,J,1005,R/TP		
7	R202	RES,CHIP	ERHY0000254	4.7K ohm,1/16W,J,1005,R/TP		
7	R204	RES,CHIP,MAKER	ERHZ0003801	5.1 ohm,1/16W ,J ,1005 ,R/TP		
7	R212	RES,CHIP,MAKER	ERHZ0000401	0 ohm,1/16W ,J ,1005 ,R/TP		
7	R213	RES,CHIP,MAKER	ERHZ0000405	10 Kohm,1/16W ,J ,1005 ,R/TP		

Copyright © 2009 LG Electronics. Inc. All right reserved.
Only for training and service purposes

LGE Internal Use Only

Level	Location No.	Description	Part Number	Spec	Color	Remark
7	R216	RES,CHIP	ERHY0009506	100 Kohm,1/20W(0.05W) ,J ,0603 ,R/TP		
7	R218	RES,CHIP,MAKER	ERHZ0000401	0 ohm,1/16W ,J ,1005 ,R/TP		
7	R219	RES,CHIP,MAKER	ERHZ0000401	0 ohm,1/16W ,J ,1005 ,R/TP		
7	R220	RES,CHIP,MAKER	ERHZ0000401	0 ohm,1/16W ,J ,1005 ,R/TP		
7	R221	RES,CHIP,MAKER	ERHZ0000401	0 ohm,1/16W ,J ,1005 ,R/TP		
7	R222	RES,CHIP,MAKER	ERHZ0000401	0 ohm,1/16W ,J ,1005 ,R/TP		
7	U100	IC	EUSY0329201	QFN ,28 PIN,R/TP ,Camera SerDes		
7	U101	IC	EUSY0383101	CSP ,35 ,R/TP ,3.15x3.15x0.55 ,; ,IC,Sub PMIC		
7	U102	IC	EUSY0355501	PLP1010-4 ,4 PIN,R/TP ,1.8V 150mA Single LDO ,; ,IC,LDO Voltage Regulator		
7	U104	IC	EUSY0366801	BGA ,96 ,R/TP ,MDDI, SCALIER ,; ,IC,Mobile Pixel Link(MPL)		
7	U105	IC	EUSY0238306	DFN ,8 PIN,R/TP ,heptic Driver		
7	U106	IC	EUSY0367001	DFN1612-4B ,4 ,R/TP ,300mA 3.3V LDO ,; ,IC,LDO Voltage Regulator		
7	U200	IC	EUSY0337101	CSP ,12 PIN,R/TP ,Touchscreen Controller IC , ,IC,A/D Converter		
7	U202	IC	EUSY0355701	PLP1010-4 ,4 PIN,R/TP ,150mA 2.8V Single LDO ,; ,IC,Voltage Regulator		
7	U203	IC	EUSY0308601	FLGA12V3 ,12 PIN,R/TP ,3x3 Data formatter for IR remote control		
7	VA200	DIODE,TVS	EDTY0008606	DFN-2 ,7.82 V,150 mW,R/TP ,PB-FREE		
7	VA201	DIODE,TVS	EDTY0008606	DFN-2 ,7.82 V,150 mW,R/TP ,PB-FREE		
7	VA202	VARISTOR	SEVY0007301	5 V,<0.5pF ,SMD ,		
7	X100	X-TAL	EXXY0023301	27 MHz,50 PPM,9 pF,50 ohm,SMD ,3.2*2.5*0.7 ,30ppm at -20'C ~ +70'C, Pb Free		
7	X101	OSCILLATOR	EXSY0021303	24 MHz,50 PPM,15 pF,SMD ,3.2*2.5*1.0 ,2.3V~3.2V, -30'C ~ +80'C		
7	X600	VCTCXO	EXSK0007802	19.2 MHz,1.5 PPM,10 pF,SMD ,3.3*2.5*1.0 , ,; , ,2PPM ,2.8V , , , , ,SMD ,P/TP		
7	ZD100	DIODE,TVS	EDTY0009401	VMN2 ,5 V,10 W,R/TP ,1.0*0.6*0.4 ,; , ,7.82V , , ,100mW ,[empty] ,[empty] ,2P ,1		
7	ZD101	DIODE,TVS	EDTY0009401	VMN2 ,5 V,10 W,R/TP ,1.0*0.6*0.4 ,; , ,7.82V , , ,100mW ,[empty] ,[empty] ,2P ,1		
7	ZD102	DIODE,TVS	EDTY0009401	VMN2 ,5 V,10 W,R/TP ,1.0*0.6*0.4 ,; , ,7.82V , , ,100mW ,[empty] ,[empty] ,2P ,1		

Copyright © 2009 LG Electronics. Inc. All right reserved.
Only for training and service purposes

Level	Location No.	Description	Part Number	Spec	Color	Remark
7	ZD103	DIODE,TVS	EDTY0009401	VMN2 ,5 V,10 W,R/TP ,1.0*0.6*0.4 ,; , ,7.82V , , ,100mW ,[empty] ,[empty] ,2P ,1		
6	SPCY00	PCB,FLEXIBLE	SPCY0166301	POLYI ,0.45 mm,BUILD-UP 4 , ,; , , , , , , , , ,		
4	SACY01	PCB ASSY,FLEXIBLE	SACY0100301	L-06A Key FPCB		
5	SACB00	PCB ASSY,FLEXIBLE,INSERT	SACB0056701			
5	SACE	PCB ASSY,FLEXIBLE,SMT	SACE0078801			
6	SACC00	PCB ASSY,FLEXIBLE,SMT BOTTOM	SACC0054701			
7	ANT500	CONN,RF SWITCH	ENWY0004001	,SMD ,1.3 dB,		
7	C621	INDUCTOR,CHIP	ELCH0004714	18 nH,J ,1005 ,R/TP ,		
7	CN700	CONNECTOR,BOARD TO BOARD	ENBY0034101	24 PIN,0.4 mm,ETC , ,GB042 H=1.0, Plug		
6	SACD00	PCB ASSY,FLEXIBLE,SMT TOP	SACD0067901			
7	C501	CAP,TANTAL,CHIP	ECTH0004807	10 uF,10V ,M ,STD ,1608 ,R/TP ,; , ,[empty] ,[empty] , ,-55TO+125C , ,[empty] ,[empty] ,[empty] ,[empty]		
7	C504	CAP,CERAMIC,CHIP	ECCH0000122	47 pF,50V,J,NP0,TC,1005,R/TP		
7	C505	CAP,CERAMIC,CHIP	ECCH0000120	39 pF,50V,J,NP0,TC,1005,R/TP		
7	C703	CAP,CHIP,MAKER	ECZH0000830	33 pF,50V ,J ,NP0 ,TC ,1005 ,R/TP		
7	C704	CAP,CHIP,MAKER	ECZH0003103	0.1 uF,10V ,K ,X7R ,HD ,1005 ,R/TP		
7	C705	CAP,CHIP,MAKER	ECZH0000830	33 pF,50V ,J ,NP0 ,TC ,1005 ,R/TP		
7	C706	CAP,CHIP,MAKER	ECZH0003103	0.1 uF,10V ,K ,X7R ,HD ,1005 ,R/TP		
7	D402	DIODE,TVS	EDTY0008610	SOD-523 ,5 V,250 W,R/TP ,PB-FREE		
7	LD1	DIODE,LED,CHIP	EDLH0014302	WHITE ,ETC ,R/TP ,2.8x0.85x0.4t ,; ,[empty] , , , , , ,[empty] ,[empty] ,4P		
7	LD2	DIODE,LED,CHIP	EDLH0014302	WHITE ,ETC ,R/TP ,2.8x0.85x0.4t ,; ,[empty] , , , , , ,[empty] ,[empty] ,4P		
7	MIC1	MICROPHONE	SUMY0010609	UNIT ,-42 dB,3.76*2.95*1.1 ,mems smd mic ,; , , ,OMNI ,[empty] , ,[empty]		
7	R2	RES,CHIP,MAKER	ERHZ0000483	47 ohm,1/16W ,J ,1005 ,R/TP		
7	R3	RES,CHIP,MAKER	ERHZ0000483	47 ohm,1/16W ,J ,1005 ,R/TP		
7	R511	RES,CHIP,MAKER	ERHZ0000406	100 Kohm,1/16W ,J ,1005 ,R/TP		
7	R512	RES,CHIP,MAKER	ERHZ0000406	100 Kohm,1/16W ,J ,1005 ,R/TP		
7	R513	RES,CHIP,MAKER	ERHZ0000406	100 Kohm,1/16W ,J ,1005 ,R/TP		

Copyright © 2009 LG Electronics. Inc. All right reserved.
Only for training and service purposes

LGE Internal Use Only

Level	Location No.	Description	Part Number	Spec	Color	Remark
7	R514	RES,CHIP,MAKER	ERHZ0000406	100 Kohm,1/16W ,J ,1005 ,R/TP		
7	R515	RES,CHIP,MAKER	ERHZ0000406	100 Kohm,1/16W ,J ,1005 ,R/TP		
7	R516	RES,CHIP,MAKER	ERHZ0000406	100 Kohm,1/16W ,J ,1005 ,R/TP		
7	U700	IC	EUSY0362601	SSON004 ,4 ,R/TP ,Hall IC ,; ,IC,CMOS		
7	U701	IC	EUSY0362601	SSON004 ,4 ,R/TP ,Hall IC ,; ,IC,CMOS		
7	VA701	DIODE,TVS	EDTY0009401	VMN2 ,5 V,10 W,R/TP ,1.0*0.6*0.4 ,; , ,7.82V , , ,100mW ,[empty] ,[empty] ,2P ,1		
7	ZD3	DIODE,TVS	EDTY0009401	VMN2 ,5 V,10 W,R/TP ,1.0*0.6*0.4 ,; , ,7.82V , , ,100mW ,[empty] ,[empty] ,2P ,1		
7	ZD4	DIODE,TVS	EDTY0009401	VMN2 ,5 V,10 W,R/TP ,1.0*0.6*0.4 ,; , ,7.82V , , ,100mW ,[empty] ,[empty] ,2P ,1		
6	SPCY	PCB,FLEXIBLE	SPCY0166601	POLYI ,0.25 mm,MULTI-3 , ,; , , , , , , , , ,		
4	SJMY00	VIBRATOR,MOTOR	SJMY0008504	2.0 V,0.1 A,10*3.6 ,12mm linear motor ,; ,3V , , , , , , ,		K, 91
4	SMZY00	MODULE,ETC	SMZY0022201	LED MATRIX(5x17) ,; ,Module Assembly		E, 8
4	SUSY00	SPEAKER	SUSY0028008	ASSY ,8 ohm,92 dB,1810 mm,3.0t 15mm ,; , , , , , , , ,WIRE		J, 90
4	SVCY00	CAMERA	SVCY0020601	CMOS ,VGA ,Aptina 1/11", 5x5x2.5t, socket		L, 89
4	SVCY01	CAMERA	SVCY0020801	CMOS ,MEGA ,5M AF [Sony 1/3.2" IMX034,CCP2,90,FPCB]		N', 85
4	SVLM00	LCD MODULE	SVLM0030101	Main ,3.0" ,480*800 ,45.6*76.6*2 ,16.7M ,TFT ,TM , ,		N, 13
4	SWCC00	CABLE,COAXIAL	SWCC0006401	28 mm, LINE, ,; ,[empty] ,[empty] ,[empty] , ,[empty] , ,[empty]		L', 54
4	SWWA00	WIRE ASSY	SWWA0060402	74 mm,40 LINE,44 ,Cable ass`y with hinge ,; , , ,		A'
4	SNGF00	ANTENNA,GSM,FIXED	SNGF0045601	3:1 ,-7.0 dBd, ,L-06A Internal W2100+W800+EGSM+DCS+PCS, Pb-Free ,; ,QUAD ,-7.0 ,50ohm ,3:1		70
4	SNGF01	ANTENNA,GSM,FIXED	SNGF0045701	3:1 ,-7.0 dBd, ,L-06A 13.56MHz Felica Antenna, Pb-Free ,; ,SINGLE ,-7.0 ,50ohm ,3:1		71
4	SNGR00	ANTENNA,GSM,RETRACTABLE	SNGR0001101	5:1 ,4:1 ,-10 dBd,-7 dBd,White ,L-06A Ret Ant(1-Seg), Pb-Free		72
3	SAFY00	PCB ASSY,MAIN	SAFY0302701			55
4	SAFB00	PCB ASSY,MAIN,INSERT	SAFB0103901			
5	SACY00	PCB ASSY,FLEXIBLE	SACY0097601	L-06A Sub FPCB		M'
6	SACB00	PCB ASSY,FLEXIBLE,INSERT	SACB0057401			
6	SACE00	PCB ASSY,FLEXIBLE,SMT	SACE0088401			

Copyright © 2009 LG Electronics. Inc. All right reserved.
Only for training and service purposes

Level	Location No.	Description	Part Number	Spec	Color	Remark
7	SACC00	PCB ASSY,FLEXIBLE,SMT BOTTOM	SACC0064401			
8	BAT701	BATTERY,CELL,LITHIUM	SBCL0001701	2 V,0.5 mAh,CYLINDER ,Reflow type BB, Max T 1.67, phi 4.8, Pb-Free		
8	C701	CAP,CHIP,MAKER	ECZH0003103	0.1 uF,10V ,K ,X7R ,HD ,1005 ,R/TP		
8	C702	CAP,CERAMIC,CHIP	ECCH0000120	39 pF,50V,J,NP0,TC,1005,R/TP		
8	C703	CAP,CERAMIC,CHIP	ECCH0000187	150 pF,50V ,J ,NP0 ,TC ,1005 ,R/TP		
8	C708	CAP,CERAMIC,CHIP	ECCH0001806	47 nF,50V ,K ,X7R ,HD ,1608 ,R/TP		
8	C709	CAP,CERAMIC,CHIP	ECCH0004904	1 uF,6.3V ,K ,X5R ,TC ,1005 ,R/TP		
8	C710	CAP,CHIP,MAKER	ECZH0003103	0.1 uF,10V ,K ,X7R ,HD ,1005 ,R/TP		
8	C711	CAP,CERAMIC,CHIP	ECCH0004904	1 uF,6.3V ,K ,X5R ,TC ,1005 ,R/TP		
8	C712	CAP,CERAMIC,CHIP	ECCH0004904	1 uF,6.3V ,K ,X5R ,TC ,1005 ,R/TP		
8	C713	CAP,CERAMIC,CHIP	ECCH0004904	1 uF,6.3V ,K ,X5R ,TC ,1005 ,R/TP		
8	C714	CAP,CHIP,MAKER	ECZH0003103	0.1 uF,10V ,K ,X7R ,HD ,1005 ,R/TP		
8	C715	CAP,CERAMIC,CHIP	ECCH0004904	1 uF,6.3V ,K ,X5R ,TC ,1005 ,R/TP		
8	C716	CAP,CHIP,MAKER	ECZH0003103	0.1 uF,10V ,K ,X7R ,HD ,1005 ,R/TP		
8	C717	CAP,CHIP,MAKER	ECZH0003103	0.1 uF,10V ,K ,X7R ,HD ,1005 ,R/TP		
8	C718	CAP,CHIP,MAKER	ECZH0003103	0.1 uF,10V ,K ,X7R ,HD ,1005 ,R/TP		
8	C719	CAP,CERAMIC,CHIP	ECCH0004904	1 uF,6.3V ,K ,X5R ,TC ,1005 ,R/TP		
8	C723	CAP,CHIP,MAKER	ECZH0003103	0.1 uF,10V ,K ,X7R ,HD ,1005 ,R/TP		
8	C724	CAP,CERAMIC,CHIP	ECCH0004904	1 uF,6.3V ,K ,X5R ,TC ,1005 ,R/TP		
8	C726	CAP,CHIP,MAKER	ECZH0003103	0.1 uF,10V ,K ,X7R ,HD ,1005 ,R/TP		
8	C727	CAP,CHIP,MAKER	ECZH0003103	0.1 uF,10V ,K ,X7R ,HD ,1005 ,R/TP		
8	C728	CAP,CERAMIC,CHIP	ECCH0005604	10000000 pF,6.3V ,M ,X5R ,TC ,1608 ,R/TP , , ,[empty] ,[empty] ,[empty] ,[empty] ,[empty] ,[empty] ,0.8 mm		
8	C729	CAP,CERAMIC,CHIP	ECCH0000198	2.2 uF,6.3V ,M ,X5R ,TC ,1005 ,R/TP		
8	C733	CAP,CERAMIC,CHIP	ECCH0009110	22 nF,6.3V ,K ,X7R ,TC ,0603 ,R/TP		
8	C734	CAP,CERAMIC,CHIP	ECCH0009101	0.1 uF,6.3V ,K ,X5R ,TC ,0603 ,R/TP		
8	C901	CAP,CERAMIC,CHIP	ECCH0000112	15 pF,50V,J,NP0,TC,1005,R/TP		
8	C902	CAP,CERAMIC,CHIP	ECCH0000110	10 pF,50V,D,NP0,TC,1005,R/TP		
8	C905	CAP,CHIP,MAKER	ECZH0000830	33 pF,50V ,J ,NP0 ,TC ,1005 ,R/TP		
8	C908	CAP,CHIP,MAKER	ECZH0001002	0.5 pF,50V ,B ,NP0 ,TC ,1005 ,R/TP		

Copyright © 2009 LG Electronics. Inc. All right reserved.
Only for training and service purposes

LGE Internal Use Only

Level	Location No.	Description	Part Number	Spec	Color	Remark
8	C909	CAP,CHIP,MAKER	ECZH0000802	1 pF,50V ,C ,NP0 ,TC ,1005 ,R/TP		
8	C910	CAP,CERAMIC,CHIP	ECCH0000901	2.2 pF,50V ,C ,NP0 ,TC ,1005 ,R/TP		
8	C911	CAP,CERAMIC,CHIP	ECCH0000195	3.9 pF,50V ,C ,NP0 ,TC ,1005 ,R/TP		
8	C912	CAP,CHIP,MAKER	ECZH0000846	8.2 pF,50V ,C ,NP0 ,TC ,1005 ,R/TP		
8	C913	CAP,CERAMIC,CHIP	ECCH0000112	15 pF,50V,J,NP0,TC,1005,R/TP		
8	C918	CAP,CHIP,MAKER	ECZH0001215	1 uF,10V ,K ,X5R ,TC ,1005 ,R/TP		
8	C919	CAP,CERAMIC,CHIP	ECCH0004904	1 uF,6.3V ,K ,X5R ,TC ,1005 ,R/TP		
8	C922	CAP,CERAMIC,CHIP	ECCH0004904	1 uF,6.3V ,K ,X5R ,TC ,1005 ,R/TP		
8	CN703	CONNECTOR,BOARD TO BOARD	ENBY0034201	24 PIN,0.4 mm,ETC , ,GB042 H=1.0, Socket		
8	CN704	CONNECTOR,BOARD TO BOARD	ENBY0035901	40 PIN,0.4 mm,ETC , ,H=1.0, Plug		
8	D701	DIODE,SWITCHING	EDSY0010501	ESC ,30 V,100 mA,R/TP ,SWITCH DIODE		
8	D704	DIODE,SWITCHING	EDSY0011901	EMD2 ,30 V,1 A,R/TP ,VF=1.5V(IF=200mA) , IR=30uA(VR=10V)		
8	D705	DIODE,TVS	EDTY0008606	DFN-2 ,7.82 V,150 mW,R/TP ,PB-FREE		
8	FB701	FILTER,BEAD,CHIP	SFBH0009601	220 ohm,1005 ,DCR : 0.35 , Rated current : 500mA,PBFREE		
8	FB702	FILTER,BEAD,CHIP	SFBH0000909	60 ohm,1005 ,		
8	FL900	FILTER,SEPERATOR,SP3T	SFAD0001401	500 MHz,0 MHz,0.65 dB, dB, dB,22 dB, dB,1000 MHz,0 MHz,0.65 dB, dB, dB,22 dB, dB,2000 MHz,0 MHz,0.8 dB, dB, dB,17 dB, dB,SMD ,ETC ,SP3T, for Felice, 2.0*1.35		
8	FL901	FILTER,SEPERATOR,SP3T	SFAD0001401	500 MHz,0 MHz,0.65 dB, dB, dB,22 dB, dB,1000 MHz,0 MHz,0.65 dB, dB, dB,22 dB, dB,2000 MHz,0 MHz,0.8 dB, dB, dB,17 dB, dB,SMD ,ETC ,SP3T, for Felice, 2.0*1.35		
8	L701	INDUCTOR,CHIP	ELCH0001425	82 nH,J ,1005 ,R/TP ,PBFREE		
8	L702	RES,CHIP,MAKER	ERHZ0000401	0 ohm,1/16W ,J ,1005 ,R/TP		
8	LD701	DIODE,LED,CHIP	EDLH0014303	WHITE ,ETC ,R/TP ,2.0x1.6x0.7t ,; ,[empty] ,3.6v(MAX) , , , , ,[empty] ,[empty] ,[empty]		
8	LD702	DIODE,LED,CHIP	EDLH0014102	ORANGE ,1608 ,R/TP ,0.4T ,; ,[empty] ,2.1~2.6V ,20mA , , ,78mW ,[empty] ,[empty] ,2P		
8	R701	RES,CHIP,MAKER	ERHZ0000404	1 Kohm,1/16W ,J ,1005 ,R/TP		
8	R702	RES,CHIP	ERHY0003501	220 ohm,1/16W ,J ,1005 ,R/TP		
8	R703	RES,CHIP,MAKER	ERHZ0000401	0 ohm,1/16W ,J ,1005 ,R/TP		
8	R704	RES,CHIP,MAKER	ERHZ0000401	0 ohm,1/16W ,J ,1005 ,R/TP		

Copyright © 2009 LG Electronics. Inc. All right reserved.
Only for training and service purposes

Level	Location No.	Description	Part Number	Spec	Color	Remark
8	R706	RES,CHIP,MAKER	ERHZ0000405	10 Kohm,1/16W ,J ,1005 ,R/TP		
8	R708	RES,CHIP	ERHY0003301	100 ohm,1/16W ,J ,1005 ,R/TP		
8	R712	RES,CHIP	ERHY0000254	4.7K ohm,1/16W,J,1005,R/TP		
8	R713	RES,CHIP	ERHY0000254	4.7K ohm,1/16W,J,1005,R/TP		
8	R717	RES,CHIP,MAKER	ERHZ0000484	470 ohm,1/16W ,J ,1005 ,R/TP		
8	R718	RES,CHIP,MAKER	ERHZ0000410	12 ohm,1/16W ,J ,1005 ,R/TP		
8	R719	RES,CHIP,MAKER	ERHZ0000438	20 Kohm,1/16W ,J ,1005 ,R/TP		
8	R720	RES,CHIP	ERHY0009526	4.7 Kohm,1/20W(0.05W) ,J ,0603 ,R/TP		
8	R721	RES,CHIP	ERHY0009526	4.7 Kohm,1/20W(0.05W) ,J ,0603 ,R/TP		
8	R723	RES,CHIP	ERHY0009504	1 Kohm,1/20W(0.05W) ,J ,0603 ,R/TP		
8	R913	RES,CHIP	ERHY0009526	4.7 Kohm,1/20W(0.05W) ,J ,0603 ,R/TP		
8	R914	RES,CHIP	ERHY0009526	4.7 Kohm,1/20W(0.05W) ,J ,0603 ,R/TP		
8	R922	RES,CHIP	ERHY0009506	100 Kohm,1/20W(0.05W) ,J ,0603 ,R/TP		
8	R923	RES,CHIP,MAKER	ERHZ0000401	0 ohm,1/16W ,J ,1005 ,R/TP		
8	U701	IC	EUSY0370101	VFBGA ,49 ,ETC ,Pb-free_Felica_BB ,; ,IC,Digital Baseband Processor		
8	U703	IC	EUSY0369801	VFBGA ,61 ,ETC ,Pb-free_Felica_RF Chip ,; ,IC,Tuner		
8	U704	IC	EUSY0321201	BGA ,64 PIN,R/TP ,6*6 ISP		
8	U707	IC	EUSY0345201	3*3 QFN ,10 PIN,R/TP ,3xis Accelerometer ,; ,IC,A/D Converter		
8	U902	IC	EUSY0383102	CSP ,20 ,R/TP ,Felica s/w Controller IC ,; ,IC,Bus Controller		
8	X701	RESONATOR	EXRY0003301	27.12 MHz,420 %, pF,SMD ,3.2*1.3*1.0 ,Ceramic Resonator ,; ,27.12 ,420 , ,SMD ,R/TP		
8	X702	OSCILLATOR	EXSY0022103	27 MHz,50 PPM,15 pF,SMD ,3.2*2.5*1.0 ,2.3V ~ 3.2V, -20'C ~ +70'C ,; ,27MHz ,50PPM ,2.8V ,3.2 ,2.5 ,1.0 , ,SMD ,R/TP		
8	ZD701	DIODE,TVS	EDTY0009401	VMN2 ,5 V,10 W,R/TP ,1.0*0.6*0.4 ,; , ,7.82V , , ,100mW ,[empty] ,[empty] ,2P ,1		
8	ZD702	DIODE,TVS	EDTY0009401	VMN2 ,5 V,10 W,R/TP ,1.0*0.6*0.4 ,; , ,7.82V , , ,100mW ,[empty] ,[empty] ,2P ,1		
8	ZD703	DIODE,TVS	EDTY0009401	VMN2 ,5 V,10 W,R/TP ,1.0*0.6*0.4 ,; , ,7.82V , , ,100mW ,[empty] ,[empty] ,2P ,1		
7	SPCY00	PCB,FLEXIBLE	SPCY0166001	POLYI , mm,BUILD-UP 4 , ,; , , , , , , , , , ,		
4	SAFF00	PCB ASSY,MAIN,SMT	SAFF0215101			J'

Copyright © 2009 LG Electronics. Inc. All right reserved.
Only for training and service purposes

LGE Internal Use Only

Level	Location No.	Description	Part Number	Spec	Color	Remark
5	BRAH00	RESIN,PC	BRAH0001301	; , , , ,[empty]	Black	
5	SAFC00	PCB ASSY,MAIN,SMT BOTTOM	SAFC0121401			
6	C1	CAP,CHIP,MAKER	ECZH0000826	27 pF,50V ,J ,NP0 ,TC ,1005 ,R/TP		
6	C10	CAP,CHIP,MAKER	ECZH0001215	1 uF,10V ,K ,X5R ,TC ,1005 ,R/TP		
6	C11	CAP,CHIP,MAKER	ECZH0001215	1 uF,10V ,K ,X5R ,TC ,1005 ,R/TP		
6	C12	CAP,CERAMIC,CHIP	ECCH0000198	2.2 uF,6.3V ,M ,X5R ,TC ,1005 ,R/TP		
6	C182	CAP,CHIP,MAKER	ECZH0000810	9 pF,50V ,D ,NP0 ,TC ,1005 ,R/TP		
6	C183	CAP,CHIP,MAKER	ECZH0000802	1 pF,50V ,C ,NP0 ,TC ,1005 ,R/TP		
6	C2	CAP,CHIP,MAKER	ECZH0000826	27 pF,50V ,J ,NP0 ,TC ,1005 ,R/TP		
6	C3	CAP,CHIP,MAKER	ECZH0000830	33 pF,50V ,J ,NP0 ,TC ,1005 ,R/TP		
6	C4	CAP,CHIP,MAKER	ECZH0000816	12 pF,50V ,J ,NP0 ,TC ,1005 ,R/TP		
6	C400	CAP,CERAMIC,CHIP	ECCH0007802	4.7 uF,10V ,M ,X5R ,TC ,1608 ,R/TP		
6	C401	CAP,CERAMIC,CHIP	ECCH0000182	0.1 uF,10V ,K ,X5R ,HD ,1005 ,R/TP		
6	C402	CAP,CERAMIC,CHIP	ECCH0000182	0.1 uF,10V ,K ,X5R ,HD ,1005 ,R/TP		
6	C403	CAP,CERAMIC,CHIP	ECCH0000182	0.1 uF,10V ,K ,X5R ,HD ,1005 ,R/TP		
6	C404	CAP,CERAMIC,CHIP	ECCH0000182	0.1 uF,10V ,K ,X5R ,HD ,1005 ,R/TP		
6	C405	CAP,CERAMIC,CHIP	ECCH0000182	0.1 uF,10V ,K ,X5R ,HD ,1005 ,R/TP		
6	C406	CAP,CERAMIC,CHIP	ECCH0007802	4.7 uF,10V ,M ,X5R ,TC ,1608 ,R/TP		
6	C407	CAP,CERAMIC,CHIP	ECCH0000143	1 nF,50V,K,X7R,HD,1005,R/TP		
6	C408	CAP,CERAMIC,CHIP	ECCH0004904	1 uF,6.3V ,K ,X5R ,TC ,1005 ,R/TP		
6	C409	CAP,CERAMIC,CHIP	ECCH0006201	4.7 uF,6.3V ,K ,X5R ,TC ,1608 ,R/TP		
6	C410	CAP,CERAMIC,CHIP	ECCH0000198	2.2 uF,6.3V ,M ,X5R ,TC ,1005 ,R/TP		
6	C411	CAP,CERAMIC,CHIP	ECCH0006201	4.7 uF,6.3V ,K ,X5R ,TC ,1608 ,R/TP		
6	C412	CAP,CERAMIC,CHIP	ECCH0004904	1 uF,6.3V ,K ,X5R ,TC ,1005 ,R/TP		
6	C413	CAP,CERAMIC,CHIP	ECCH0000143	1 nF,50V,K,X7R,HD,1005,R/TP		
6	C414	CAP,CERAMIC,CHIP	ECCH0000115	22 pF,50V,J,NP0,TC,1005,R/TP		
6	C416	CAP,CHIP,MAKER	ECZH0003103	0.1 uF,10V ,K ,X7R ,HD ,1005 ,R/TP		
6	C417	CAP,CERAMIC,CHIP	ECCH0000198	2.2 uF,6.3V ,M ,X5R ,TC ,1005 ,R/TP		
6	C418	CAP,CERAMIC,CHIP	ECCH0000198	2.2 uF,6.3V ,M ,X5R ,TC ,1005 ,R/TP		

Copyright © 2009 LG Electronics. Inc. All right reserved.
Only for training and service purposes

Level	Location No.	Description	Part Number	Spec	Color	Remark
6	C419	CAP,CERAMIC,CHIP	ECCH0004904	1 uF,6.3V ,K ,X5R ,TC ,1005 ,R/TP		
6	C420	CAP,CHIP,MAKER	ECZH0004402	100000 pF,16V ,Z ,X7R ,TC ,1005 ,R/TP , , ,[empty] ,[empty] ,[empty] ,[empty] ,[empty] ,[empty]		
6	C421	CAP,CERAMIC,CHIP	ECCH0000115	22 pF,50V,J,NP0,TC,1005,R/TP		
6	C422	CAP,CHIP,MAKER	ECZH0003103	0.1 uF,10V ,K ,X7R ,HD ,1005 ,R/TP		
6	C423	CAP,CERAMIC,CHIP	ECCH0000198	2.2 uF,6.3V ,M ,X5R ,TC ,1005 ,R/TP		
6	C424	CAP,CERAMIC,CHIP	ECCH0007802	4.7 uF,10V ,M ,X5R ,TC ,1608 ,R/TP		
6	C425	CAP,CERAMIC,CHIP	ECCH0006201	4.7 uF,6.3V ,K ,X5R ,TC ,1608 ,R/TP		
6	C426	CAP,CERAMIC,CHIP	ECCH0000198	2.2 uF,6.3V ,M ,X5R ,TC ,1005 ,R/TP		
6	C427	CAP,CERAMIC,CHIP	ECCH0000182	0.1 uF,10V ,K ,X5R ,HD ,1005 ,R/TP		
6	C428	CAP,CERAMIC,CHIP	ECCH0009101	0.1 uF,6.3V ,K ,X5R ,TC ,0603 ,R/TP		
6	C429	CAP,CERAMIC,CHIP	ECCH0009201	47 nF,6.3V ,K ,X5R ,TC ,0603 ,R/TP		
6	C430	CAP,CERAMIC,CHIP	ECCH0009101	0.1 uF,6.3V ,K ,X5R ,TC ,0603 ,R/TP		
6	C431	CAP,CERAMIC,CHIP	ECCH0006201	4.7 uF,6.3V ,K ,X5R ,TC ,1608 ,R/TP		
6	C432	CAP,CERAMIC,CHIP	ECCH0000198	2.2 uF,6.3V ,M ,X5R ,TC ,1005 ,R/TP		
6	C433	CAP,CERAMIC,CHIP	ECCH0007802	4.7 uF,10V ,M ,X5R ,TC ,1608 ,R/TP		
6	C434	CAP,CERAMIC,CHIP	ECCH0004904	1 uF,6.3V ,K ,X5R ,TC ,1005 ,R/TP		
6	C435	CAP,CERAMIC,CHIP	ECCH0000143	1 nF,50V,K,X7R,HD,1005,R/TP		
6	C436	CAP,CERAMIC,CHIP	ECCH0000143	1 nF,50V,K,X7R,HD,1005,R/TP		
6	C437	CAP,CERAMIC,CHIP	ECCH0006201	4.7 uF,6.3V ,K ,X5R ,TC ,1608 ,R/TP		
6	C438	CAP,CERAMIC,CHIP	ECCH0005604	10000000 pF,6.3V ,M ,X5R ,TC ,1608 ,R/TP , , ,[empty] ,[empty] ,[empty] ,[empty] ,[empty] ,[empty] ,0.8 mm		
6	C439	CAP,CERAMIC,CHIP	ECCH0005604	10000000 pF,6.3V ,M ,X5R ,TC ,1608 ,R/TP , , ,[empty] ,[empty] ,[empty] ,[empty] ,[empty] ,[empty] ,0.8 mm		
6	C440	CAP,CERAMIC,CHIP	ECCH0009101	0.1 uF,6.3V ,K ,X5R ,TC ,0603 ,R/TP		
6	C441	CAP,CERAMIC,CHIP	ECCH0009201	47 nF,6.3V ,K ,X5R ,TC ,0603 ,R/TP		
6	C442	CAP,CERAMIC,CHIP	ECCH0004904	1 uF,6.3V ,K ,X5R ,TC ,1005 ,R/TP		
6	C443	CAP,CERAMIC,CHIP	ECCH0006201	4.7 uF,6.3V ,K ,X5R ,TC ,1608 ,R/TP		
6	C444	CAP,CERAMIC,CHIP	ECCH0000198	2.2 uF,6.3V ,M ,X5R ,TC ,1005 ,R/TP		
6	C445	CAP,CHIP,MAKER	ECZH0001215	1 uF,10V ,K ,X5R ,TC ,1005 ,R/TP		
6	C447	CAP,CERAMIC,CHIP	ECCH0000198	2.2 uF,6.3V ,M ,X5R ,TC ,1005 ,R/TP		
6	C448	CAP,CERAMIC,CHIP	ECCH0006201	4.7 uF,6.3V ,K ,X5R ,TC ,1608 ,R/TP		

Copyright © 2009 LG Electronics. Inc. All right reserved.
Only for training and service purposes

LGE Internal Use Only

Level	Location No.	Description	Part Number	Spec	Color	Remark
6	C449	CAP,CERAMIC,CHIP	ECCH0000198	2.2 uF,6.3V ,M ,X5R ,TC ,1005 ,R/TP		
6	C450	CAP,CERAMIC,CHIP	ECCH0000198	2.2 uF,6.3V ,M ,X5R ,TC ,1005 ,R/TP		
6	C451	CAP,CERAMIC,CHIP	ECCH0004904	1 uF,6.3V ,K ,X5R ,TC ,1005 ,R/TP		
6	C5	CAP,CHIP,MAKER	ECZH0000816	12 pF,50V ,J ,NP0 ,TC ,1005 ,R/TP		
6	C500	CAP,CHIP,MAKER	ECZH0001216	220 nF,10V ,K ,X5R ,TC ,1005 ,R/TP		
6	C502	CAP,CHIP,MAKER	ECZH0001215	1 uF,10V ,K ,X5R ,TC ,1005 ,R/TP		
6	C506	CAP,CHIP,MAKER	ECZH0000830	33 pF,50V ,J ,NP0 ,TC ,1005 ,R/TP		
6	C514	CAP,CHIP,MAKER	ECZH0001215	1 uF,10V ,K ,X5R ,TC ,1005 ,R/TP		
6	C515	CAP,CHIP,MAKER	ECZH0001215	1 uF,10V ,K ,X5R ,TC ,1005 ,R/TP		
6	C517	CAP,CHIP,MAKER	ECZH0001215	1 uF,10V ,K ,X5R ,TC ,1005 ,R/TP		
6	C518	CAP,CHIP,MAKER	ECZH0001102	18000 pF,16V ,K ,X7R ,HD ,1005 ,R/TP		
6	C519	CAP,CHIP,MAKER	ECZH0000830	33 pF,50V ,J ,NP0 ,TC ,1005 ,R/TP		
6	C520	CAP,CHIP,MAKER	ECZH0001102	18000 pF,16V ,K ,X7R ,HD ,1005 ,R/TP		
6	C521	CAP,CHIP,MAKER	ECZH0001216	220 nF,10V ,K ,X5R ,TC ,1005 ,R/TP		
6	C522	CAP,CERAMIC,CHIP	ECCH0000182	0.1 uF,10V ,K ,X5R ,HD ,1005 ,R/TP		
6	C523	CAP,CHIP,MAKER	ECZH0001215	1 uF,10V ,K ,X5R ,TC ,1005 ,R/TP		
6	C524	CAP,CERAMIC,CHIP	ECCH0006201	4.7 uF,6.3V ,K ,X5R ,TC ,1608 ,R/TP		
6	C600	CAP,CERAMIC,CHIP	ECCH0009101	0.1 uF,6.3V ,K ,X5R ,TC ,0603 ,R/TP		
6	C601	CAP,CERAMIC,CHIP	ECCH0009101	0.1 uF,6.3V ,K ,X5R ,TC ,0603 ,R/TP		
6	C602	CAP,CERAMIC,CHIP	ECCH0009101	0.1 uF,6.3V ,K ,X5R ,TC ,0603 ,R/TP		
6	C605	CAP,CERAMIC,CHIP	ECCH0000182	0.1 uF,10V ,K ,X5R ,HD ,1005 ,R/TP		
6	C606	CAP,CERAMIC,CHIP	ECCH0009106	10 nF,16V ,K ,X7R ,TC ,0603 ,R/TP		
6	C607	CAP,CERAMIC,CHIP	ECCH0009106	10 nF,16V ,K ,X7R ,TC ,0603 ,R/TP		
6	C608	CAP,CERAMIC,CHIP	ECCH0000182	0.1 uF,10V ,K ,X5R ,HD ,1005 ,R/TP		
6	C609	CAP,CERAMIC,CHIP	ECCH0009101	0.1 uF,6.3V ,K ,X5R ,TC ,0603 ,R/TP		
6	C7	CAP,CERAMIC,CHIP	ECCH0000117	27 pF,50V,J,NP0,TC,1005,R/TP		
6	C8	CAP,CERAMIC,CHIP	ECCH0000117	27 pF,50V,J,NP0,TC,1005,R/TP		
6	CN1	CONNECTOR,BOARD TO BOARD	ENBY0045201	10 PIN,0.4 mm,STRAIGHT , , ,; , ,0.40MM ,STRAIGHT ,MALE ,SMD ,[empty] , ,		
6	CN400	CONNECTOR,ETC	ENZY0022901	3 ,2.5 mm,ETC , ,		

Copyright © 2009 LG Electronics. Inc. All right reserved.
Only for training and service purposes

Level	Location No.	Description	Part Number	Spec	Color	Remark
6	CN401	CONNECTOR,I/O	ENRY0005101	10 PIN,0.5 mm,ANGLE , ,Japan W-CDMA, 1 Coaxial		
6	CN500	CONNECTOR,BOARD TO BOARD	ENBY0034201	24 PIN,0.4 mm,ETC , ,GB042 H=1.0, Socket		
6	CN501	CONNECTOR,BOARD TO BOARD	ENBY0036001	40 PIN,0.4 mm,ETC , ,H=1.0, Socket		
6	CN502	CONNECTOR,BOARD TO BOARD	ENBY0048101	40 ,0.4 mm,ETC , ,H=1.85(max.) ,; , ,0.40MM ,[empty] ,[empty] ,[empty] ,[empty] , ,		
6	D400	DIODE,TVS	EDTY0009201	1.6*1.6*0.6 ,5 V,150 W,R/TP , ,; ,5 ,6 ,15 ,40 ,- ,[empty] ,R/TP ,6P ,4		
6	D401	DIODE,SWITCHING	EDSY0011901	EMD2 ,30 V,1 A,R/TP ,VF=1.5V(IF=200mA) , IR=30uA(VR=10V)		
6	D402	DIODE,TVS	EDTY0008606	DFN-2 ,7.82 V,150 mW,R/TP ,PB-FREE		
6	D403	DIODE,TVS	EDTY0007401	SMD ,12 V,350 W,R/TP ,		
6	FB1	FILTER,BEAD,CHIP	SFBH0009801	600 ohm,1005 ,DC Res.0.6ohm, R.C.500mA		
6	FB2	FILTER,BEAD,CHIP	SFBH0009801	600 ohm,1005 ,DC Res.0.6ohm, R.C.500mA		
6	FB3	FILTER,BEAD,CHIP	SFBH0008101	600 ohm,1005 ,		
6	FB401	FILTER,BEAD,CHIP	SFBH0008101	600 ohm,1005 ,		
6	FB402	FILTER,BEAD,CHIP	SFBH0008101	600 ohm,1005 ,		
6	FL400	FILTER,EMI/POWER	SFEY0015301	SMD ,Pb-free_Bais ,; ,Filter,LCR		
6	FL500	FILTER,EMI/POWER	SFEY0015601	SMD ,Pb-free_Common mode filter ,; ,Filter,LCR		
6	IC500	IC	EUSY0360201	CSP ,20 ,R/TP ,Class D(mono) + Capless HP + A/S ,; ,IC,Audio Sub System		
6	L133	INDUCTOR,CHIP	ELCH0005012	3.9 nH,S ,1005 ,R/TP ,		
6	L141	INDUCTOR,CHIP	ELCH0005010	1.8 nH,S ,1005 ,R/TP ,		
6	L400	CAP,CHIP,MAKER	ECZH0000813	100 pF,50V ,J ,NP0 ,TC ,1005 ,R/TP		
6	L403	INDUCTOR,SMD,POWER	ELCP0008004	4.7 uH,M ,1 ,R/TP , ,; , ,0.3NH , , , , , ,NON SHIELD ,2.5X2X1MM ,11MM ,R/TP		
6	L404	INDUCTOR,SMD,POWER	ELCP0008004	4.7 uH,M ,1 ,R/TP , ,; , ,0.3NH , , , , , ,NON SHIELD ,2.5X2X1MM ,11MM ,R/TP		
6	L405	INDUCTOR,SMD,POWER	ELCP0008004	4.7 uH,M ,1 ,R/TP , ,; , ,0.3NH , , , , , ,NON SHIELD ,2.5X2X1MM ,11MM ,R/TP		
6	L406	INDUCTOR,SMD,POWER	ELCP0008004	4.7 uH,M ,1 ,R/TP , ,; , ,0.3NH , , , , , ,NON SHIELD ,2.5X2X1MM ,11MM ,R/TP		
6	Q1	TR,FET,P-CHANNEL	EQFP0009401	SC75-6 ,19 W,-20 V,-12 A,R/TP ,P-Channel FET ,; ,P-CHANNEL ,MOSFET ,-20 ,8 ,-12 ,0.041 ,19 ,SC75 ,R/TP ,6P		
6	Q400	TR,BJT,PNP	EQBP0009901	TSMT6 ,0.5 W,R/TP ,Vceo=-12V, Ic=-3A, hFE=270~680		

Copyright © 2009 LG Electronics. Inc. All right reserved.
Only for training and service purposes

LGE Internal Use Only

Level	Location No.	Description	Part Number	Spec	Color	Remark
6	Q402	TR,BJT,ARRAY	EQBA0000602	TESV ,200 mW,R/TP ,EPITAXIAL PLANAR NPN/PNP TRANSISTOR		
6	R1	RES,CHIP,MAKER	ERHZ0000243	2200 ohm,1/16W ,F ,1005 ,R/TP		
6	R2	RES,CHIP	ERHY0000181	15 ohm,1/16W ,F ,1005 ,R/TP		
6	R207	RES,CHIP	ERHY0009503	100 ohm,1/20W(0.05W) ,J ,0603 ,R/TP		
6	R211	RES,CHIP	ERHY0009503	100 ohm,1/20W(0.05W) ,J ,0603 ,R/TP		
6	R217	RES,CHIP	ERHY0009526	4.7 Kohm,1/20W(0.05W) ,J ,0603 ,R/TP		
6	R219	RES,CHIP	ERHY0009526	4.7 Kohm,1/20W(0.05W) ,J ,0603 ,R/TP		
6	R3	RES,CHIP	ERHY0000181	15 ohm,1/16W ,F ,1005 ,R/TP		
6	R4	RES,CHIP	ERHY0009506	100 Kohm,1/20W(0.05W) ,J ,0603 ,R/TP		
6	R401	RES,CHIP,MAKER	ERHZ0000404	1 Kohm,1/16W ,J ,1005 ,R/TP		
6	R404	RES,CHIP,MAKER	ERHZ0004201	121000 ohm,1/16W ,F ,1005 ,R/TP		
6	R405	RES,CHIP	ERHY0009536	100 Kohm,1/20W(0.05W) ,F ,0603 ,R/TP		
6	R406	RES,CHIP,MAKER	ERHZ0000222	150 Kohm,1/16W ,F ,1005 ,R/TP		
6	R407	RES,CHIP	ERHY0009547	200 Kohm,1/20W(0.05W) ,F ,0603 ,R/TP		
6	R408	RES,CHIP	ERHY0000105	51 ohm,1/16W,F,1005,R/TP		
6	R409	RES,CHIP	ERHY0009302	1 Kohm,1/20W(0.05W) ,F ,0603 ,R/TP		
6	R410	RES,CHIP,MAKER	ERHZ0003901	0.1 ohm,1/4W ,F ,2012 ,R/TP ,; ,0.1 ,1% ,1/4W ,2012 ,R/TP		
6	R411	RES,CHIP	ERHY0009307	470 Kohm,1/20W(0.05W) ,F ,0603 ,R/TP		
6	R412	RES,CHIP	ERHY0009561	56 Kohm,1/20W(0.05W) ,F ,0603 ,R/TP		
6	R413	RES,CHIP,MAKER	ERHZ0000405	10 Kohm,1/16W ,J ,1005 ,R/TP		
6	R414	RES,CHIP,MAKER	ERHZ0000537	680000 ohm,1/16W ,F ,1005 ,R/TP		
6	R415	RES,CHIP	ERHY0009503	100 ohm,1/20W(0.05W) ,J ,0603 ,R/TP		
6	R416	RES,CHIP,MAKER	ERHZ0000537	680000 ohm,1/16W ,F ,1005 ,R/TP		
6	R418	RES,CHIP	ERHY0009505	10 Kohm,1/20W(0.05W) ,J ,0603 ,R/TP		
6	R419	RES,CHIP,MAKER	ERHZ0000212	12 Kohm,1/16W ,F ,1005 ,R/TP		
6	R420	RES,CHIP	ERHY0009536	100 Kohm,1/20W(0.05W) ,F ,0603 ,R/TP		
6	R421	RES,CHIP	ERHY0009506	100 Kohm,1/20W(0.05W) ,J ,0603 ,R/TP		
6	R422	RES,CHIP,MAKER	ERHZ0000493	51 Kohm,1/16W ,J ,1005 ,R/TP		
6	R424	RES,CHIP	ERHY0009504	1 Kohm,1/20W(0.05W) ,J ,0603 ,R/TP		

Copyright © 2009 LG Electronics. Inc. All right reserved.
Only for training and service purposes

Level	Location No.	Description	Part Number	Spec	Color	Remark
6	R513	RES,CHIP	ERHY0009506	100 Kohm,1/20W(0.05W) ,J ,0603 ,R/TP		
6	R514	RES,CHIP,MAKER	ERHZ0000206	10 ohm,1/16W ,F ,1005 ,R/TP		
6	R515	RES,CHIP,MAKER	ERHZ0000206	10 ohm,1/16W ,F ,1005 ,R/TP		
6	R600	RES,CHIP	ERHY0000290	300K ohm,1/16W,J,1005,R/TP		
6	R606	RES,CHIP	ERHY0009506	100 Kohm,1/20W(0.05W) ,J ,0603 ,R/TP		
6	R609	RES,CHIP	ERHY0009307	470 Kohm,1/20W(0.05W) ,F ,0603 ,R/TP		
6	R610	RES,CHIP	ERHY0009506	100 Kohm,1/20W(0.05W) ,J ,0603 ,R/TP		
6	R612	RES,CHIP	ERHY0009506	100 Kohm,1/20W(0.05W) ,J ,0603 ,R/TP		
6	R613	RES,CHIP	ERHY0009506	100 Kohm,1/20W(0.05W) ,J ,0603 ,R/TP		
6	R617	RES,CHIP	ERHY0009527	47 Kohm,1/20W(0.05W) ,J ,0603 ,R/TP		
6	R619	RES,CHIP	ERHY0009506	100 Kohm,1/20W(0.05W) ,J ,0603 ,R/TP		
6	S600	CONN,SOCKET	ENSY0018601	16 PIN,ETC , ,2.54 mm,UIM 8P, Micro SD Dupli-Socket		
6	SW100	CONN,RF SWITCH	ENWY0002301	ANGLE ,SMD ,0.8 dB,		
6	SW500	CONN,RF SWITCH	ENWY0004001	,SMD ,1.3 dB,		
6	U2	IC	EUSY0355701	PLP1010-4 ,4 PIN,R/TP ,150mA 2.8V Single LDO ,; ,IC,Voltage Regulator		
6	U400	IC	EUSY0342201	CSP ,137 PIN,R/TP ,PMIC, for MSM7xxx ,; ,IC,PMIC		
6	U401	IC	EUSY0240001	MICROPAK ,6 PIN,R/TP ,SINGLE BIT UNIT-DIRECTIONAL TRANSLATOR / PB FREE		
6	U402	IC	EUSY0320201	TFBGA ,36 PIN,R/TP ,USB2.0 Transceiver, 3.5X3.5X0.8		
6	U403	IC	EUSY0373201	uMLP ,10 ,R/TP ,USB 2.0 High Speed(Data)+ Audio(Negative swing) ,; ,IC,Analog Switch		
6	U501	IC	EUSY0355701	PLP1010-4 ,4 PIN,R/TP ,150mA 2.8V Single LDO ,; ,IC,Voltage Regulator		
6	U601	IC	EUSY0373301	BGA ,48 ,R/TP ,CPRM ,; ,IC,MCP		
6	U602	IC	EUSY0240001	MICROPAK ,6 PIN,R/TP ,SINGLE BIT UNIT-DIRECTIONAL TRANSLATOR / PB FREE		
6	U604	IC	EUSY0240001	MICROPAK ,6 PIN,R/TP ,SINGLE BIT UNIT-DIRECTIONAL TRANSLATOR / PB FREE		
6	VA1	VARISTOR	SEVY0008102	5.5 V, ,SMD ,Vdc 5.5, Vb 10~15.6, Cp 9.1 at 1MHz, 0.6*0.3*0.33 , ,5.5 , ,10.5~19.5 ,0.6*0.3*0.33 ,[empty] ,SMD ,R/TP		
6	VA2	VARISTOR	SEVY0008102	5.5 V, ,SMD ,Vdc 5.5, Vb 10~15.6, Cp 9.1 at 1MHz, 0.6*0.3*0.33 , ,5.5 , ,10.5~19.5 ,0.6*0.3*0.33 ,[empty] ,SMD ,R/TP		

Copyright © 2009 LG Electronics. Inc. All right reserved.
Only for training and service purposes

LGE Internal Use Only

Level	Location No.	Description	Part Number	Spec	Color	Remark
6	VA200	VARISTOR	SEVY0008102	5.5 V, ,SMD ,Vdc 5.5, Vb 10~15.6, Cp 9.1 at 1MHz, 0.6*0.3*0.33 , ,5.5 , ,10.5~19.5 ,0.6*0.3*0.33 ,[empty] ,SMD ,R/TP		
6	VA201	VARISTOR	SEVY0008102	5.5 V, ,SMD ,Vdc 5.5, Vb 10~15.6, Cp 9.1 at 1MHz, 0.6*0.3*0.33 , ,5.5 , ,10.5~19.5 ,0.6*0.3*0.33 ,[empty] ,SMD ,R/TP		
6	VA202	VARISTOR	SEVY0008102	5.5 V, ,SMD ,Vdc 5.5, Vb 10~15.6, Cp 9.1 at 1MHz, 0.6*0.3*0.33 , ,5.5 , ,10.5~19.5 ,0.6*0.3*0.33 ,[empty] ,SMD ,R/TP		
6	VA3	VARISTOR	SEVY0008102	5.5 V, ,SMD ,Vdc 5.5, Vb 10~15.6, Cp 9.1 at 1MHz, 0.6*0.3*0.33 , ,5.5 , ,10.5~19.5 ,0.6*0.3*0.33 ,[empty] ,SMD ,R/TP		
6	VA4	VARISTOR	SEVY0008102	5.5 V, ,SMD ,Vdc 5.5, Vb 10~15.6, Cp 9.1 at 1MHz, 0.6*0.3*0.33 , ,5.5 , ,10.5~19.5 ,0.6*0.3*0.33 ,[empty] ,SMD ,R/TP		
6	VA400	VARISTOR	SEVY0008102	5.5 V, ,SMD ,Vdc 5.5, Vb 10~15.6, Cp 9.1 at 1MHz, 0.6*0.3*0.33 , ,5.5 , ,10.5~19.5 ,0.6*0.3*0.33 ,[empty] ,SMD ,R/TP		
6	VA401	CAP,CERAMIC,CHIP	ECCH0009101	0.1 uF,6.3V ,K ,X5R ,TC ,0603 ,R/TP		
6	VA500	VARISTOR	SEVY0008102	5.5 V, ,SMD ,Vdc 5.5, Vb 10~15.6, Cp 9.1 at 1MHz, 0.6*0.3*0.33 , ,5.5 , ,10.5~19.5 ,0.6*0.3*0.33 ,[empty] ,SMD ,R/TP		
6	VA501	VARISTOR	SEVY0008102	5.5 V, ,SMD ,Vdc 5.5, Vb 10~15.6, Cp 9.1 at 1MHz, 0.6*0.3*0.33 , ,5.5 , ,10.5~19.5 ,0.6*0.3*0.33 ,[empty] ,SMD ,R/TP		
6	VA502	VARISTOR	SEVY0008102	5.5 V, ,SMD ,Vdc 5.5, Vb 10~15.6, Cp 9.1 at 1MHz, 0.6*0.3*0.33 , ,5.5 , ,10.5~19.5 ,0.6*0.3*0.33 ,[empty] ,SMD ,R/TP		
6	VA503	VARISTOR	SEVY0008102	5.5 V, ,SMD ,Vdc 5.5, Vb 10~15.6, Cp 9.1 at 1MHz, 0.6*0.3*0.33 , ,5.5 , ,10.5~19.5 ,0.6*0.3*0.33 ,[empty] ,SMD ,R/TP		
6	VA504	VARISTOR	SEVY0008102	5.5 V, ,SMD ,Vdc 5.5, Vb 10~15.6, Cp 9.1 at 1MHz, 0.6*0.3*0.33 , ,5.5 , ,10.5~19.5 ,0.6*0.3*0.33 ,[empty] ,SMD ,R/TP		
6	VA505	VARISTOR	SEVY0008102	5.5 V, ,SMD ,Vdc 5.5, Vb 10~15.6, Cp 9.1 at 1MHz, 0.6*0.3*0.33 , ,5.5 , ,10.5~19.5 ,0.6*0.3*0.33 ,[empty] ,SMD ,R/TP		
6	VA506	VARISTOR	SEVY0008102	5.5 V, ,SMD ,Vdc 5.5, Vb 10~15.6, Cp 9.1 at 1MHz, 0.6*0.3*0.33 , ,5.5 , ,10.5~19.5 ,0.6*0.3*0.33 ,[empty] ,SMD ,R/TP		
6	VA507	VARISTOR	SEVY0008102	5.5 V, ,SMD ,Vdc 5.5, Vb 10~15.6, Cp 9.1 at 1MHz, 0.6*0.3*0.33 , ,5.5 , ,10.5~19.5 ,0.6*0.3*0.33 ,[empty] ,SMD ,R/TP		
6	VA508	VARISTOR	SEVY0008102	5.5 V, ,SMD ,Vdc 5.5, Vb 10~15.6, Cp 9.1 at 1MHz, 0.6*0.3*0.33 , ,5.5 , ,10.5~19.5 ,0.6*0.3*0.33 ,[empty] ,SMD ,R/TP		

Copyright © 2009 LG Electronics. Inc. All right reserved.
Only for training and service purposes

Level	Location No.	Description	Part Number	Spec	Color	Remark
6	VA509	VARISTOR	SEVY0008102	5.5 V, ,SMD ,Vdc 5.5, Vb 10~15.6, Cp 9.1 at 1MHz, 0.6*0.3*0.33 , ,5.5 , ,10.5~19.5 ,0.6*0.3*0.33 ,[empty] ,SMD ,R/TP		
6	VA510	VARISTOR	SEVY0008102	5.5 V, ,SMD ,Vdc 5.5, Vb 10~15.6, Cp 9.1 at 1MHz, 0.6*0.3*0.33 , ,5.5 , ,10.5~19.5 ,0.6*0.3*0.33 ,[empty] ,SMD ,R/TP		
6	VA511	VARISTOR	SEVY0008102	5.5 V, ,SMD ,Vdc 5.5, Vb 10~15.6, Cp 9.1 at 1MHz, 0.6*0.3*0.33 , ,5.5 , ,10.5~19.5 ,0.6*0.3*0.33 ,[empty] ,SMD ,R/TP		
6	VA512	VARISTOR	SEVY0008102	5.5 V, ,SMD ,Vdc 5.5, Vb 10~15.6, Cp 9.1 at 1MHz, 0.6*0.3*0.33 , ,5.5 , ,10.5~19.5 ,0.6*0.3*0.33 ,[empty] ,SMD ,R/TP		
6	VA513	VARISTOR	SEVY0008102	5.5 V, ,SMD ,Vdc 5.5, Vb 10~15.6, Cp 9.1 at 1MHz, 0.6*0.3*0.33 , ,5.5 , ,10.5~19.5 ,0.6*0.3*0.33 ,[empty] ,SMD ,R/TP		
6	VA600	VARISTOR	SEVY0008102	5.5 V, ,SMD ,Vdc 5.5, Vb 10~15.6, Cp 9.1 at 1MHz, 0.6*0.3*0.33 , ,5.5 , ,10.5~19.5 ,0.6*0.3*0.33 ,[empty] ,SMD ,R/TP		
6	VA601	VARISTOR	SEVY0008102	5.5 V, ,SMD ,Vdc 5.5, Vb 10~15.6, Cp 9.1 at 1MHz, 0.6*0.3*0.33 , ,5.5 , ,10.5~19.5 ,0.6*0.3*0.33 ,[empty] ,SMD ,R/TP		
6	VA602	VARISTOR	SEVY0008102	5.5 V, ,SMD ,Vdc 5.5, Vb 10~15.6, Cp 9.1 at 1MHz, 0.6*0.3*0.33 , ,5.5 , ,10.5~19.5 ,0.6*0.3*0.33 ,[empty] ,SMD ,R/TP		
6	VA603	VARISTOR	SEVY0008102	5.5 V, ,SMD ,Vdc 5.5, Vb 10~15.6, Cp 9.1 at 1MHz, 0.6*0.3*0.33 , ,5.5 , ,10.5~19.5 ,0.6*0.3*0.33 ,[empty] ,SMD ,R/TP		
6	VA604	VARISTOR	SEVY0008102	5.5 V, ,SMD ,Vdc 5.5, Vb 10~15.6, Cp 9.1 at 1MHz, 0.6*0.3*0.33 , ,5.5 , ,10.5~19.5 ,0.6*0.3*0.33 ,[empty] ,SMD ,R/TP		
6	VA605	VARISTOR	SEVY0008102	5.5 V, ,SMD ,Vdc 5.5, Vb 10~15.6, Cp 9.1 at 1MHz, 0.6*0.3*0.33 , ,5.5 , ,10.5~19.5 ,0.6*0.3*0.33 ,[empty] ,SMD ,R/TP		
6	VA606	VARISTOR	SEVY0008102	5.5 V, ,SMD ,Vdc 5.5, Vb 10~15.6, Cp 9.1 at 1MHz, 0.6*0.3*0.33 , ,5.5 , ,10.5~19.5 ,0.6*0.3*0.33 ,[empty] ,SMD ,R/TP		
6	VA607	VARISTOR	SEVY0008102	5.5 V, ,SMD ,Vdc 5.5, Vb 10~15.6, Cp 9.1 at 1MHz, 0.6*0.3*0.33 , ,5.5 , ,10.5~19.5 ,0.6*0.3*0.33 ,[empty] ,SMD ,R/TP		
6	VA608	VARISTOR	SEVY0008102	5.5 V, ,SMD ,Vdc 5.5, Vb 10~15.6, Cp 9.1 at 1MHz, 0.6*0.3*0.33 , ,5.5 , ,10.5~19.5 ,0.6*0.3*0.33 ,[empty] ,SMD ,R/TP		
6	VA609	VARISTOR	SEVY0008102	5.5 V, ,SMD ,Vdc 5.5, Vb 10~15.6, Cp 9.1 at 1MHz, 0.6*0.3*0.33 , ,5.5 , ,10.5~19.5 ,0.6*0.3*0.33 ,[empty] ,SMD ,R/TP		
6	VA610	VARISTOR	SEVY0008102	5.5 V, ,SMD ,Vdc 5.5, Vb 10~15.6, Cp 9.1 at 1MHz, 0.6*0.3*0.33 , ,5.5 , ,10.5~19.5 ,0.6*0.3*0.33 ,[empty] ,SMD ,R/TP		

Copyright © 2009 LG Electronics. Inc. All right reserved.
Only for training and service purposes

LGE Internal Use Only

Level	Location No.	Description	Part Number	Spec	Color	Remark
6	X400	X-TAL	EXXY0024301	32.768 KHz,20 PPM,12.5 pF,70 Kohm,SMD ,3.2*1.5*0.9 ,-40'C ~ +85'C, C0 1.05pF, C1 fF ,; ,32.768 ,20PPM ,12.5 , , ,SMD ,R/TP		
6	X600	VCTCXO	EXSK0007802	19.2 MHz,1.5 PPM,10 pF,SMD ,3.3*2.5*1.0 , ,; , ,2PPM ,2.8V , , , , ,SMD ,P/TP		
6	ZD400	DIODE,TVS	EDTY0008602	SOD-323 ,13.3 V,400 W,R/TP ,PB-FREE		
6	ZD401	DIODE,TVS	EDTY0009401	VMN2 ,5 V,10 W,R/TP ,1.0*0.6*0.4 ,; , ,7.82V , , ,100mW ,[empty] ,[empty] ,2P ,1		
5	SAFD00	PCB ASSY,MAIN,SMT TOP	SAFD0119401			
6	C100	CAP,CERAMIC,CHIP	ECCH0005604	10000000 pF,6.3V ,M ,X5R ,TC ,1608 ,R/TP , , ,[empty] ,[empty] ,[empty] ,[empty] ,[empty] ,[empty] ,0.8 mm		
6	C101	CAP,CERAMIC,CHIP	ECCH0005604	10000000 pF,6.3V ,M ,X5R ,TC ,1608 ,R/TP , , ,[empty] ,[empty] ,[empty] ,[empty] ,[empty] ,[empty] ,0.8 mm		
6	C102	CAP,CERAMIC,CHIP	ECCH0009106	10 nF,16V ,K ,X7R ,TC ,0603 ,R/TP		
6	C103	CAP,CERAMIC,CHIP	ECCH0009206	68 pF,25V ,J ,X7R ,TC ,0603 ,R/TP		
6	C104	CAP,CERAMIC,CHIP	ECCH0009101	0.1 uF,6.3V ,K ,X5R ,TC ,0603 ,R/TP		
6	C105	CAP,CERAMIC,CHIP	ECCH0009504	18 pF,25V ,J ,NP0 ,TC ,0603 ,R/TP		
6	C106	CAP,CHIP,MAKER	ECZH0025917	47 pF,25V ,J ,NP0 ,TC ,0603 ,R/TP		
6	C107	CAP,CERAMIC,CHIP	ECCH0009104	33 pF,50V ,J ,X7R ,TC ,0603 ,R/TP		
6	C108	CAP,CHIP,MAKER	ECZH0003103	0.1 uF,10V ,K ,X7R ,HD ,1005 ,R/TP		
6	C109	CAP,CHIP,MAKER	ECZH0001215	1 uF,10V ,K ,X5R ,TC ,1005 ,R/TP		
6	C110	CAP,CHIP,MAKER	ECZH0003103	0.1 uF,10V ,K ,X7R ,HD ,1005 ,R/TP		
6	C112	CAP,CERAMIC,CHIP	ECCH0000198	2.2 uF,6.3V ,M ,X5R ,TC ,1005 ,R/TP		
6	C113	CAP,CERAMIC,CHIP	ECCH0009103	100 pF,50V ,J ,X7R ,TC ,0603 ,R/TP , , ,[empty] ,[empty] ,C0G ,[empty] ,[empty] ,[empty] ,0.3 mm		
6	C114	CAP,CHIP,MAKER	ECZH0003103	0.1 uF,10V ,K ,X7R ,HD ,1005 ,R/TP		
6	C116	INDUCTOR,CHIP	ELCH0001411	1.2 nH,S ,1005 ,R/TP ,PBFREE		
6	C117	RES,CHIP	ERHY0009503	100 ohm,1/20W(0.05W) ,J ,0603 ,R/TP		
6	C118	CAP,CERAMIC,CHIP	ECCH0009216	22 pF,25V ,J ,X7R ,TC ,0603 ,R/TP		
6	C119	CAP,CERAMIC,CHIP	ECCH0009216	22 pF,25V ,J ,X7R ,TC ,0603 ,R/TP		
6	C120	CAP,CHIP,MAKER	ECZH0000816	12 pF,50V ,J ,NP0 ,TC ,1005 ,R/TP		
6	C122	CAP,CHIP,MAKER	ECZH0000844	68 pF,50V ,J ,NP0 ,TC ,1005 ,R/TP		
6	C124	CAP,CERAMIC,CHIP	ECCH0000175	2.7 pF,50V ,B ,NP0 ,TC ,1005 ,R/TP		
6	C125	CAP,CERAMIC,CHIP	ECCH0009101	0.1 uF,6.3V ,K ,X5R ,TC ,0603 ,R/TP		

Copyright © 2009 LG Electronics. Inc. All right reserved.
Only for training and service purposes

Level	Location No.	Description	Part Number	Spec	Color	Remark
6	C126	CAP,CERAMIC,CHIP	ECCH0009216	22 pF,25V ,J ,X7R ,TC ,0603 ,R/TP		
6	C127	CAP,CERAMIC,CHIP	ECCH0009103	100 pF,50V ,J ,X7R ,TC ,0603 ,R/TP , , ,[empty] ,[empty] ,C0G ,[empty] ,[empty] ,[empty] ,0.3 mm		
6	C128	CAP,CERAMIC,CHIP	ECCH0000113	18 pF,50V,J,NP0,TC,1005,R/TP		
6	C129	CAP,CHIP,MAKER	ECZH0000813	100 pF,50V ,J ,NP0 ,TC ,1005 ,R/TP		
6	C130	CAP,CHIP,MAKER	ECZH0000830	33 pF,50V ,J ,NP0 ,TC ,1005 ,R/TP		
6	C131	CAP,CERAMIC,CHIP	ECCH0000115	22 pF,50V,J,NP0,TC,1005,R/TP		
6	C132	CAP,CERAMIC,CHIP	ECCH0000120	39 pF,50V,J,NP0,TC,1005,R/TP		
6	C133	CAP,CHIP,MAKER	ECZH0000846	8.2 pF,50V ,C ,NP0 ,TC ,1005 ,R/TP		
6	C134	CAP,CERAMIC,CHIP	ECCH0009106	10 nF,16V ,K ,X7R ,TC ,0603 ,R/TP		
6	C135	CAP,CERAMIC,CHIP	ECCH0000155	10 nF,16V,K,X7R,HD,1005,R/TP		
6	C136	CAP,CERAMIC,CHIP	ECCH0009104	33 pF,50V ,J ,X7R ,TC ,0603 ,R/TP		
6	C137	CAP,CERAMIC,CHIP	ECCH0009101	0.1 uF,6.3V ,K ,X5R ,TC ,0603 ,R/TP		
6	C138	CAP,CHIP,MAKER	ECZH0003103	0.1 uF,10V ,K ,X7R ,HD ,1005 ,R/TP		
6	C139	CAP,CERAMIC,CHIP	ECCH0009101	0.1 uF,6.3V ,K ,X5R ,TC ,0603 ,R/TP		
6	C140	CAP,CERAMIC,CHIP	ECCH0009206	68 pF,25V ,J ,X7R ,TC ,0603 ,R/TP		
6	C141	CAP,CERAMIC,CHIP	ECCH0000185	5.6 pF,50V ,C ,NP0 ,TC ,1005 ,R/TP		
6	C142	CAP,CERAMIC,CHIP	ECCH0009206	68 pF,25V ,J ,X7R ,TC ,0603 ,R/TP		
6	C143	CAP,CERAMIC,CHIP	ECCH0005603	2.2 uF,10V ,K ,X5R ,TC ,1608 ,R/TP		
6	C144	CAP,CERAMIC,CHIP	ECCH0000155	10 nF,16V,K,X7R,HD,1005,R/TP		
6	C145	CAP,CERAMIC,CHIP	ECCH0000155	10 nF,16V,K,X7R,HD,1005,R/TP		
6	C146	CAP,CHIP,MAKER	ECZH0000813	100 pF,50V ,J ,NP0 ,TC ,1005 ,R/TP		
6	C147	CAP,CHIP,MAKER	ECZH0000841	56 pF,50V ,J ,NP0 ,TC ,1005 ,R/TP		
6	C148	CAP,CHIP,MAKER	ECZH0000841	56 pF,50V ,J ,NP0 ,TC ,1005 ,R/TP		
6	C149	CAP,CHIP,MAKER	ECZH0000841	56 pF,50V ,J ,NP0 ,TC ,1005 ,R/TP		
6	C150	CAP,CHIP,MAKER	ECZH0000841	56 pF,50V ,J ,NP0 ,TC ,1005 ,R/TP		
6	C151	CAP,CHIP,MAKER	ECZH0025904	4 pF,25V ,C ,NP0 ,TC ,0603 ,R/TP		
6	C152	CAP,CERAMIC,CHIP	ECCH0000143	1 nF,50V,K,X7R,HD,1005,R/TP		
6	C153	CAP,CHIP,MAKER	ECZH0003103	0.1 uF,10V ,K ,X7R ,HD ,1005 ,R/TP		
6	C154	CAP,CHIP,MAKER	ECZH0001215	1 uF,10V ,K ,X5R ,TC ,1005 ,R/TP		

Copyright © 2009 LG Electronics. Inc. All right reserved.
Only for training and service purposes

LGE Internal Use Only

Level	Location No.	Description	Part Number	Spec	Color	Remark
6	C155	CAP,CHIP,MAKER	ECZH0000830	33 pF,50V ,J ,NP0 ,TC ,1005 ,R/TP		
6	C156	CAP,CHIP,MAKER	ECZH0000844	68 pF,50V ,J ,NP0 ,TC ,1005 ,R/TP		
6	C157	CAP,CHIP,MAKER	ECZH0000816	12 pF,50V ,J ,NP0 ,TC ,1005 ,R/TP		
6	C158	CAP,CERAMIC,CHIP	ECCH0000112	15 pF,50V,J,NP0,TC,1005,R/TP		
6	C159	CAP,CERAMIC,CHIP	ECCH0009504	18 pF,25V ,J ,NP0 ,TC ,0603 ,R/TP		
6	C160	CAP,CHIP,MAKER	ECZH0000830	33 pF,50V ,J ,NP0 ,TC ,1005 ,R/TP		
6	C161	CAP,CERAMIC,CHIP	ECCH0009106	10 nF,16V ,K ,X7R ,TC ,0603 ,R/TP		
6	C162	CAP,CERAMIC,CHIP	ECCH0005603	2.2 uF,10V ,K ,X5R ,TC ,1608 ,R/TP		
6	C163	CAP,CHIP,MAKER	ECZH0000839	4.7 pF,50V ,C ,NP0 ,TC ,1005 ,R/TP		
6	C164	CAP,CHIP,MAKER	ECZH0000813	100 pF,50V ,J ,NP0 ,TC ,1005 ,R/TP		
6	C165	CAP,CHIP,MAKER	ECZH0025920	1000 pF,16V ,K ,X7R ,HD ,0603 ,R/TP		
6	C166	CAP,CERAMIC,CHIP	ECCH0009106	10 nF,16V ,K ,X7R ,TC ,0603 ,R/TP		
6	C167	CAP,CERAMIC,CHIP	ECCH0000115	22 pF,50V,J,NP0,TC,1005,R/TP		
6	C168	CAP,CHIP,MAKER	ECZH0000844	68 pF,50V ,J ,NP0 ,TC ,1005 ,R/TP		
6	C169	CAP,CERAMIC,CHIP	ECCH0009103	100 pF,50V ,J ,X7R ,TC ,0603 ,R/TP , , ,[empty] ,[empty] ,C0G ,[empty] ,[empty] ,[empty] ,0.3 mm		
6	C170	CAP,CHIP,MAKER	ECZH0025920	1000 pF,16V ,K ,X7R ,HD ,0603 ,R/TP		
6	C171	CAP,CHIP,MAKER	ECZH0003103	0.1 uF,10V ,K ,X7R ,HD ,1005 ,R/TP		
6	C172	CAP,CHIP,MAKER	ECZH0000841	56 pF,50V ,J ,NP0 ,TC ,1005 ,R/TP		
6	C173	CAP,CHIP,MAKER	ECZH0025904	4 pF,25V ,C ,NP0 ,TC ,0603 ,R/TP		
6	C174	CAP,CERAMIC,CHIP	ECCH0000120	39 pF,50V,J,NP0,TC,1005,R/TP		
6	C175	CAP,CERAMIC,CHIP	ECCH0009103	100 pF,50V ,J ,X7R ,TC ,0603 ,R/TP , , ,[empty] ,[empty] ,C0G ,[empty] ,[empty] ,[empty] ,0.3 mm		
6	C176	CAP,CERAMIC,CHIP	ECCH0009106	10 nF,16V ,K ,X7R ,TC ,0603 ,R/TP		
6	C177	CAP,CHIP,MAKER	ECZH0003103	0.1 uF,10V ,K ,X7R ,HD ,1005 ,R/TP		
6	C178	CAP,CHIP,MAKER	ECZH0000813	100 pF,50V ,J ,NP0 ,TC ,1005 ,R/TP		
6	C179	CAP,CHIP,MAKER	ECZH0000813	100 pF,50V ,J ,NP0 ,TC ,1005 ,R/TP		
6	C180	INDUCTOR,CHIP	ELCH0001411	1.2 nH,S ,1005 ,R/TP ,PBFREE		
6	C181	INDUCTOR,CHIP	ELCH0005012	3.9 nH,S ,1005 ,R/TP ,		
6	C184	CAP,CERAMIC,CHIP	ECCH0003002	10000000 pF,10V ,Z ,Y5V ,HD ,2012 ,R/TP , , ,[empty] ,[empty] ,[empty] ,[empty] ,[empty] ,[empty] ,1.25 mm		
6	C185	CAP,CERAMIC,CHIP	ECCH0009216	22 pF,25V ,J ,X7R ,TC ,0603 ,R/TP		

Copyright © 2009 LG Electronics. Inc. All right reserved.
Only for training and service purposes

Level	Location No.	Description	Part Number	Spec	Color	Remark
6	C186	CAP,CERAMIC,CHIP	ECCH0005604	10000000 pF,6.3V ,M ,X5R ,TC ,1608 ,R/TP , , ,[empty] ,[empty] ,[empty] ,[empty] ,[empty] ,[empty] ,0.8 mm		
6	C187	CAP,CHIP,MAKER	ECZH0003103	0.1 uF,10V ,K ,X7R ,HD ,1005 ,R/TP		
6	C200	CAP,CERAMIC,CHIP	ECCH0009506	27 pF,25V ,J ,NP0 ,TC ,0603 ,R/TP		
6	C201	CAP,CERAMIC,CHIP	ECCH0009101	0.1 uF,6.3V ,K ,X5R ,TC ,0603 ,R/TP		
6	C202	CAP,CERAMIC,CHIP	ECCH0009203	33 nF,6.3V ,K ,X5R ,TC ,0603 ,R/TP		
6	C203	CAP,CERAMIC,CHIP	ECCH0009101	0.1 uF,6.3V ,K ,X5R ,TC ,0603 ,R/TP		
6	C204	CAP,CERAMIC,CHIP	ECCH0000143	1 nF,50V,K,X7R,HD,1005,R/TP		
6	C206	CAP,CHIP,MAKER	ECZH0003103	0.1 uF,10V ,K ,X7R ,HD ,1005 ,R/TP		
6	C207	CAP,CERAMIC,CHIP	ECCH0009101	0.1 uF,6.3V ,K ,X5R ,TC ,0603 ,R/TP		
6	C208	CAP,CERAMIC,CHIP	ECCH0000122	47 pF,50V,J,NP0,TC,1005,R/TP		
6	C209	CAP,CERAMIC,CHIP	ECCH0009506	27 pF,25V ,J ,NP0 ,TC ,0603 ,R/TP		
6	C210	CAP,CHIP,MAKER	ECZH0003103	0.1 uF,10V ,K ,X7R ,HD ,1005 ,R/TP		
6	C211	CAP,CERAMIC,CHIP	ECCH0009101	0.1 uF,6.3V ,K ,X5R ,TC ,0603 ,R/TP		
6	C212	CAP,CERAMIC,CHIP	ECCH0009103	100 pF,50V ,J ,X7R ,TC ,0603 ,R/TP , , ,[empty] ,[empty] ,C0G ,[empty] ,[empty] ,[empty] ,0.3 mm		
6	C300	CAP,CERAMIC,CHIP	ECCH0009101	0.1 uF,6.3V ,K ,X5R ,TC ,0603 ,R/TP		
6	C301	CAP,CERAMIC,CHIP	ECCH0009106	10 nF,16V ,K ,X7R ,TC ,0603 ,R/TP		
6	C302	CAP,CERAMIC,CHIP	ECCH0009106	10 nF,16V ,K ,X7R ,TC ,0603 ,R/TP		
6	C303	CAP,TANTAL,CHIP	ECTH0006001	10 uF,10V ,M ,STD ,1608 ,R/TP ,; , ,[empty] ,[empty] , ,[empty] ,7 OHM ,[empty] ,[empty] ,[empty] ,[empty]		
6	C304	CAP,CERAMIC,CHIP	ECCH0009101	0.1 uF,6.3V ,K ,X5R ,TC ,0603 ,R/TP		
6	C305	CAP,CERAMIC,CHIP	ECCH0009101	0.1 uF,6.3V ,K ,X5R ,TC ,0603 ,R/TP		
6	C306	CAP,TANTAL,CHIP	ECTH0006001	10 uF,10V ,M ,STD ,1608 ,R/TP ,; , ,[empty] ,[empty] , ,[empty] ,7 OHM ,[empty] ,[empty] ,[empty] ,[empty]		
6	C307	CAP,TANTAL,CHIP	ECTH0006001	10 uF,10V ,M ,STD ,1608 ,R/TP ,; , ,[empty] ,[empty] , ,[empty] ,7 OHM ,[empty] ,[empty] ,[empty] ,[empty]		
6	C308	CAP,CERAMIC,CHIP	ECCH0009106	10 nF,16V ,K ,X7R ,TC ,0603 ,R/TP		
6	C309	CAP,TANTAL,CHIP	ECTH0006001	10 uF,10V ,M ,STD ,1608 ,R/TP ,; , ,[empty] ,[empty] , ,[empty] ,7 OHM ,[empty] ,[empty] ,[empty] ,[empty]		
6	C310	CAP,CERAMIC,CHIP	ECCH0009101	0.1 uF,6.3V ,K ,X5R ,TC ,0603 ,R/TP		
6	C311	CAP,CERAMIC,CHIP	ECCH0009107	2.2 nF,16V ,K ,X7R ,TC ,0603 ,R/TP		
6	C312	CAP,CERAMIC,CHIP	ECCH0009106	10 nF,16V ,K ,X7R ,TC ,0603 ,R/TP		

Copyright © 2009 LG Electronics. Inc. All right reserved.
Only for training and service purposes

LGE Internal Use Only

Level	Location No.	Description	Part Number	Spec	Color	Remark
6	C313	CAP,CERAMIC,CHIP	ECCH0009101	0.1 uF,6.3V ,K ,X5R ,TC ,0603 ,R/TP		
6	C314	CAP,CERAMIC,CHIP	ECCH0009101	0.1 uF,6.3V ,K ,X5R ,TC ,0603 ,R/TP		
6	C315	CAP,CERAMIC,CHIP	ECCH0009101	0.1 uF,6.3V ,K ,X5R ,TC ,0603 ,R/TP		
6	C316	CAP,CERAMIC,CHIP	ECCH0009106	10 nF,16V ,K ,X7R ,TC ,0603 ,R/TP		
6	C317	CAP,CERAMIC,CHIP	ECCH0009101	0.1 uF,6.3V ,K ,X5R ,TC ,0603 ,R/TP		
6	C318	CAP,CERAMIC,CHIP	ECCH0009106	10 nF,16V ,K ,X7R ,TC ,0603 ,R/TP		
6	C319	CAP,CERAMIC,CHIP	ECCH0009106	10 nF,16V ,K ,X7R ,TC ,0603 ,R/TP		
6	C320	CAP,CERAMIC,CHIP	ECCH0009106	10 nF,16V ,K ,X7R ,TC ,0603 ,R/TP		
6	C321	CAP,CERAMIC,CHIP	ECCH0009101	0.1 uF,6.3V ,K ,X5R ,TC ,0603 ,R/TP		
6	C322	CAP,CERAMIC,CHIP	ECCH0009106	10 nF,16V ,K ,X7R ,TC ,0603 ,R/TP		
6	C323	CAP,CERAMIC,CHIP	ECCH0009106	10 nF,16V ,K ,X7R ,TC ,0603 ,R/TP		
6	C324	CAP,CERAMIC,CHIP	ECCH0009101	0.1 uF,6.3V ,K ,X5R ,TC ,0603 ,R/TP		
6	C325	CAP,TANTAL,CHIP	ECTH0006001	10 uF,10V ,M ,STD ,1608 ,R/TP ,; , ,[empty] ,[empty] , ,[empty] ,7 OHM ,[empty] ,[empty] ,[empty] ,[empty]		
6	C326	CAP,CERAMIC,CHIP	ECCH0009101	0.1 uF,6.3V ,K ,X5R ,TC ,0603 ,R/TP		
6	C327	CAP,CERAMIC,CHIP	ECCH0009101	0.1 uF,6.3V ,K ,X5R ,TC ,0603 ,R/TP		
6	C328	CAP,CERAMIC,CHIP	ECCH0009101	0.1 uF,6.3V ,K ,X5R ,TC ,0603 ,R/TP		
6	C329	CAP,CERAMIC,CHIP	ECCH0009101	0.1 uF,6.3V ,K ,X5R ,TC ,0603 ,R/TP		
6	C330	CAP,CERAMIC,CHIP	ECCH0009101	0.1 uF,6.3V ,K ,X5R ,TC ,0603 ,R/TP		
6	C331	CAP,CERAMIC,CHIP	ECCH0009101	0.1 uF,6.3V ,K ,X5R ,TC ,0603 ,R/TP		
6	C332	CAP,CERAMIC,CHIP	ECCH0009101	0.1 uF,6.3V ,K ,X5R ,TC ,0603 ,R/TP		
6	C333	CAP,TANTAL,CHIP	ECTH0006001	10 uF,10V ,M ,STD ,1608 ,R/TP ,; , ,[empty] ,[empty] , ,[empty] ,7 OHM ,[empty] ,[empty] ,[empty] ,[empty]		
6	C501	CAP,CHIP,MAKER	ECZH0001215	1 uF,10V ,K ,X5R ,TC ,1005 ,R/TP		
6	C503	CAP,CHIP,MAKER	ECZH0001215	1 uF,10V ,K ,X5R ,TC ,1005 ,R/TP		
6	C504	CAP,CHIP,MAKER	ECZH0001215	1 uF,10V ,K ,X5R ,TC ,1005 ,R/TP		
6	C505	CAP,CERAMIC,CHIP	ECCH0009105	82 pF,50V ,J ,X7R ,TC ,0603 ,R/TP		
6	C507	CAP,CERAMIC,CHIP	ECCH0009105	82 pF,50V ,J ,X7R ,TC ,0603 ,R/TP		
6	C508	CAP,CHIP,MAKER	ECZH0001215	1 uF,10V ,K ,X5R ,TC ,1005 ,R/TP		
6	C509	CAP,CHIP,MAKER	ECZH0001215	1 uF,10V ,K ,X5R ,TC ,1005 ,R/TP		
6	C510	CAP,CERAMIC,CHIP	ECCH0009105	82 pF,50V ,J ,X7R ,TC ,0603 ,R/TP		

Copyright © 2009 LG Electronics. Inc. All right reserved.
Only for training and service purposes

Level	Location No.	Description	Part Number	Spec	Color	Remark
6	C511	CAP,CERAMIC,CHIP	ECCH0009101	0.1 uF,6.3V ,K ,X5R ,TC ,0603 ,R/TP		
6	C512	CAP,TANTAL,CHIP	ECTH0004807	10 uF,10V ,M ,STD ,1608 ,R/TP ,; , ,[empty] ,[empty] , ,-55TO+125C , ,[empty] ,[empty] ,[empty] ,[empty]		
6	C513	CAP,CERAMIC,CHIP	ECCH0009105	82 pF,50V ,J ,X7R ,TC ,0603 ,R/TP		
6	C516	CAP,CHIP,MAKER	ECZH0001215	1 uF,10V ,K ,X5R ,TC ,1005 ,R/TP		
6	C6	CAP,CERAMIC,CHIP	ECCH0009103	100 pF,50V ,J ,X7R ,TC ,0603 ,R/TP , , ,[empty] ,[empty] ,C0G ,[empty] ,[empty] ,[empty] ,0.3 mm		
6	C603	CAP,CHIP,MAKER	ECZH0001215	1 uF,10V ,K ,X5R ,TC ,1005 ,R/TP		
6	C604	CAP,CHIP,MAKER	ECZH0001215	1 uF,10V ,K ,X5R ,TC ,1005 ,R/TP		
6	C611	CAP,CHIP,MAKER	ECZH0001215	1 uF,10V ,K ,X5R ,TC ,1005 ,R/TP		
6	C9	CAP,CERAMIC,CHIP	ECCH0009101	0.1 uF,6.3V ,K ,X5R ,TC ,0603 ,R/TP		
6	D200	DIODE,SWITCHING	EDSY0011901	EMD2 ,30 V,1 A,R/TP ,VF=1.5V(IF=200mA) , IR=30uA(VR=10V)		
6	FL100	FILTER,SAW	SFSY0028101	1950 MHz,1.4*1.1*0.6 ,SMD ,1920M~1980M, IL 2.9, 5pin, U-U, 50-50, W-BAND I Tx , ,1950 ,1.4*1.1*0.6 ,SMD ,R/TP		
6	FL101	DUPLEXER,IMT	SDMY0001901	1950 MHz,2140 MHz,1.8 dB,2.4 dB,52 dB,43 dB,2.5*2.0*0.55 ,SMD ,Band1, 2520size, SAW, Rx unbal ,; ,2140 ,2110 to 2170 ,1950 ,1920 to 1980 ,2.4 ,1.8 ,2.5x2.0x0.55 ,DUAL ,SMD ,R/TP		
6	FL102	FILTER,SEPERATOR,SPDT	SFAC0002401	900 ,0 MHz,0.35 dB,30 dB,2000 ,0 MHz,0.35 dB,30 dB,SMD ,2520 ,P1 37 dB		
6	FL103	FILTER,SAW	SFSY0029901	836.5 MHz,1.4*1.1*0.6 ,SMD ,824M~849M, IL 2.5, 5pin, U-U, 50-50, GSM850 Tx , ,836.5 ,1.4*1.1*0.6 ,SMD ,R/TP		
6	FL104	DUPLEXER,DCN	SDDY0004701	836.5 MHz,881.5 MHz,2.3 dB,2.7 dB,50 dB,45 dB,3.0*2.5*1.25 ,SMD ,UMTS Band5 Balanced Duplexer, SAW, 3025size, ,; ,881.5 ,869to894 ,836.5 ,824to849 ,2.7 ,2.3 ,3.0x2.5x1.25 ,DUAL ,SMD ,[empty]		
6	FL105	FILTER,SAW	SFSY0029201	2140 MHz,1.35*1.05*0.6 ,SMD ,Pb-free_WCDMA_Rx_200ohm		
6	FL106	FILTER,SEPERATOR	SFAY0011901	, , dB, dB, dB, dB,4532 ,WCDMA Quad Triple 6280 IFX		
6	L100	INDUCTOR,CHIP	ELCH0001039	2.7 nH,S ,1005 ,R/TP ,PBFREE		
6	L102	INDUCTOR,CHIP	ELCH0005020	1 nH,S ,1005 ,R/TP ,		
6	L103	INDUCTOR,CHIP	ELCH0001413	22 nH,J ,1005 ,R/TP ,PBFREE		
6	L104	INDUCTOR,CHIP	ELCH0001402	18 nH,J ,1005 ,R/TP ,Pb Free		
6	L105	INDUCTOR,CHIP	ELCH0001039	2.7 nH,S ,1005 ,R/TP ,PBFREE		
6	L106	INDUCTOR,CHIP	ELCH0005005	27 nH,J ,1005 ,R/TP ,		

Copyright © 2009 LG Electronics. Inc. All right reserved.
Only for training and service purposes

LGE Internal Use Only

Level	Location No.	Description	Part Number	Spec	Color	Remark
6	L107	CAP,CERAMIC,CHIP	ECCH0000113	18 pF,50V,J,NP0,TC,1005,R/TP		
6	L108	INDUCTOR,CHIP	ELCH0001407	5.6 nH,S ,1005 ,R/TP ,PBFREE		
6	L110	INDUCTOR,CHIP	ELCH0001408	6.8 nH,J ,1005 ,R/TP ,Pb Free		
6	L111	CAP,CERAMIC,CHIP	ECCH0000901	2.2 pF,50V ,C ,NP0 ,TC ,1005 ,R/TP		
6	L113	INDUCTOR,CHIP	ELCH0005001	2.2 nH,S ,1005 ,R/TP ,		
6	L114	INDUCTOR,CHIP	ELCH0005001	2.2 nH,S ,1005 ,R/TP ,		
6	L115	INDUCTOR,CHIP	ELCH0005005	27 nH,J ,1005 ,R/TP ,		
6	L116	INDUCTOR,CHIP	ELCH0001413	22 nH,J ,1005 ,R/TP ,PBFREE		
6	L118	INDUCTOR,CHIP	ELCH0005020	1 nH,S ,1005 ,R/TP ,		
6	L119	INDUCTOR,CHIP	ELCH0001405	3.3 nH,S ,1005 ,R/TP ,PBFREE		
6	L120	INDUCTOR,CHIP	ELCH0001403	1 nH,S ,1005 ,R/TP ,PBFREE		
6	L123	INDUCTOR,CHIP	ELCH0001039	2.7 nH,S ,1005 ,R/TP ,PBFREE		
6	L124	INDUCTOR,CHIP	ELCH0001406	4.7 nH,S ,1005 ,R/TP ,PBFREE		
6	L125	INDUCTOR,CHIP	ELCH0001413	22 nH,J ,1005 ,R/TP ,PBFREE		
6	L126	INDUCTOR,CHIP	ELCH0001426	8.2 nH,J ,1005 ,R/TP ,PBFREE		
6	L127	INDUCTOR,CHIP	ELCH0001049	6.8 nH,J ,1005 ,R/TP ,PBFREE		
6	L128	INDUCTOR,CHIP	ELCH0001412	1.8 nH,S ,1005 ,R/TP ,PBFREE		
6	L130	CAP,CERAMIC,CHIP	ECCH0000901	2.2 pF,50V ,C ,NP0 ,TC ,1005 ,R/TP		
6	L131	INDUCTOR,CHIP	ELCH0001401	15 nH,J ,1005 ,R/TP ,Pb Free		
6	L132	INDUCTOR,CHIP	ELCH0005001	2.2 nH,S ,1005 ,R/TP ,		
6	L134	INDUCTOR,CHIP	ELCH0005020	1 nH,S ,1005 ,R/TP ,		
6	L135	INDUCTOR,CHIP	ELCH0001412	1.8 nH,S ,1005 ,R/TP ,PBFREE		
6	L136	INDUCTOR,CHIP	ELCH0001413	22 nH,J ,1005 ,R/TP ,PBFREE		
6	L138	INDUCTOR,CHIP	ELCH0004710	15 nH,J ,1005 ,R/TP ,		
6	L139	INDUCTOR,CHIP	ELCH0005020	1 nH,S ,1005 ,R/TP ,		
6	L140	CAP,CERAMIC,CHIP	ECCH0000701	1.2 pF,50V ,C ,NP0 ,TC ,1005 ,R/TP		
6	R101	RES,CHIP,MAKER	ERHZ0003801	5.1 ohm,1/16W ,J ,1005 ,R/TP		
6	R102	RES,CHIP	ERHY0009503	100 ohm,1/20W(0.05W) ,J ,0603 ,R/TP		
6	R103	RES,CHIP,MAKER	ERHZ0003801	5.1 ohm,1/16W ,J ,1005 ,R/TP		
6	R105	CAP,CERAMIC,CHIP	ECCH0009216	22 pF,25V ,J ,X7R ,TC ,0603 ,R/TP		

Copyright © 2009 LG Electronics. Inc. All right reserved.
Only for training and service purposes

Level	Location No.	Description	Part Number	Spec	Color	Remark
6	R106	RES,CHIP	ERHY0009502	10 ohm,1/20W(0.05W) ,J ,0603 ,R/TP		
6	R107	RES,CHIP	ERHY0009503	100 ohm,1/20W(0.05W) ,J ,0603 ,R/TP		
6	R108	RES,CHIP	ERHY0009555	12 Kohm,1/20W(0.05W) ,F ,0603 ,R/TP		
6	R109	RES,CHIP	ERHY0009504	1 Kohm,1/20W(0.05W) ,J ,0603 ,R/TP		
6	R110	RES,CHIP,MAKER	ERHZ0000443	2200 ohm,1/16W ,J ,1005 ,R/TP		
6	R112	RES,CHIP	ERHY0009503	100 ohm,1/20W(0.05W) ,J ,0603 ,R/TP		
6	R113	RES,CHIP	ERHY0009503	100 ohm,1/20W(0.05W) ,J ,0603 ,R/TP		
6	R114	RES,CHIP,MAKER	ERHZ0000509	75 ohm,1/16W ,J ,1005 ,R/TP		
6	R115	RES,CHIP,MAKER	ERHZ0000456	2.2 ohm,1/16W ,J ,1005 ,R/TP		
6	R116	RES,CHIP,MAKER	ERHZ0000404	1 Kohm,1/16W ,J ,1005 ,R/TP		
6	R117	RES,CHIP	ERHY0009506	100 Kohm,1/20W(0.05W) ,J ,0603 ,R/TP		
6	R118	RES,CHIP	ERHY0009502	10 ohm,1/20W(0.05W) ,J ,0603 ,R/TP		
6	R119	RES,CHIP	ERHY0009505	10 Kohm,1/20W(0.05W) ,J ,0603 ,R/TP		
6	R121	RES,CHIP	ERHY0009504	1 Kohm,1/20W(0.05W) ,J ,0603 ,R/TP		
6	R122	RES,CHIP	ERHY0009503	100 ohm,1/20W(0.05W) ,J ,0603 ,R/TP		
6	R123	RES,CHIP	ERHY0009504	1 Kohm,1/20W(0.05W) ,J ,0603 ,R/TP		
6	R124	RES,CHIP	ERHY0009503	100 ohm,1/20W(0.05W) ,J ,0603 ,R/TP		
6	R125	RES,CHIP	ERHY0009504	1 Kohm,1/20W(0.05W) ,J ,0603 ,R/TP		
6	R126	RES,CHIP,MAKER	ERHZ0000483	47 ohm,1/16W ,J ,1005 ,R/TP		
6	R202	RES,CHIP,MAKER	ERHZ0000286	4700 ohm,1/16W ,F ,1005 ,R/TP		
6	R204	RES,CHIP	ERHY0009526	4.7 Kohm,1/20W(0.05W) ,J ,0603 ,R/TP		
6	R205	RES,CHIP	ERHY0009506	100 Kohm,1/20W(0.05W) ,J ,0603 ,R/TP		
6	R206	RES,CHIP	ERHY0009505	10 Kohm,1/20W(0.05W) ,J ,0603 ,R/TP		
6	R209	RES,CHIP	ERHY0009505	10 Kohm,1/20W(0.05W) ,J ,0603 ,R/TP		
6	R210	RES,CHIP,MAKER	ERHZ0000437	2 Kohm,1/16W ,J ,1005 ,R/TP		
6	R216	RES,CHIP	ERHY0009526	4.7 Kohm,1/20W(0.05W) ,J ,0603 ,R/TP		
6	R218	RES,CHIP	ERHY0009554	20 Kohm,1/20W(0.05W) ,F ,0603 ,R/TP		
6	R301	RES,CHIP	ERHY0009505	10 Kohm,1/20W(0.05W) ,J ,0603 ,R/TP		
6	R302	RES,CHIP	ERHY0009505	10 Kohm,1/20W(0.05W) ,J ,0603 ,R/TP		
6	R500	RES,CHIP	ERHY0009526	4.7 Kohm,1/20W(0.05W) ,J ,0603 ,R/TP		

Copyright © 2009 LG Electronics. Inc. All right reserved.
Only for training and service purposes

LGE Internal Use Only

Level	Location No.	Description	Part Number	Spec	Color	Remark
6	R501	RES,CHIP	ERHY0009506	100 Kohm,1/20W(0.05W) ,J ,0603 ,R/TP		
6	R502	RES,CHIP	ERHY0009506	100 Kohm,1/20W(0.05W) ,J ,0603 ,R/TP		
6	R503	RES,CHIP	ERHY0009506	100 Kohm,1/20W(0.05W) ,J ,0603 ,R/TP		
6	R504	RES,CHIP	ERHY0009524	47 ohm,1/20W(0.05W) ,J ,0603 ,R/TP		
6	R505	RES,CHIP	ERHY0009524	47 ohm,1/20W(0.05W) ,J ,0603 ,R/TP		
6	R506	RES,CHIP	ERHY0009524	47 ohm,1/20W(0.05W) ,J ,0603 ,R/TP		
6	R507	RES,CHIP	ERHY0009524	47 ohm,1/20W(0.05W) ,J ,0603 ,R/TP		
6	R508	RES,CHIP	ERHY0009524	47 ohm,1/20W(0.05W) ,J ,0603 ,R/TP		
6	R509	RES,CHIP	ERHY0009524	47 ohm,1/20W(0.05W) ,J ,0603 ,R/TP		
6	R510	RES,CHIP	ERHY0009526	4.7 Kohm,1/20W(0.05W) ,J ,0603 ,R/TP		
6	R511	RES,CHIP	ERHY0009524	47 ohm,1/20W(0.05W) ,J ,0603 ,R/TP		
6	R512	RES,CHIP	ERHY0009524	47 ohm,1/20W(0.05W) ,J ,0603 ,R/TP		
6	R603	RES,CHIP,MAKER	ERHZ0000405	10 Kohm,1/16W ,J ,1005 ,R/TP		
6	R607	RES,CHIP,MAKER	ERHZ0000405	10 Kohm,1/16W ,J ,1005 ,R/TP		
6	R608	RES,CHIP,MAKER	ERHZ0000405	10 Kohm,1/16W ,J ,1005 ,R/TP		
6	R615	RES,CHIP,MAKER	ERHZ0000405	10 Kohm,1/16W ,J ,1005 ,R/TP		
6	U1	IC	EUSY0353701	PLP1010-4 ,4 PIN,R/TP ,1x1 LDO, 2.6V , 150mA ,; ,IC,LDO Voltage Regulator		
6	U100	IC	EUSY0344002	QFN ,68 PIN,R/TP ,Quad GSM, Tri WCDMA RF Transceiver ,; ,IC,Tx/Rx		
6	U101	COUPLER,RF DIRECTIONAL	SCDY0003901	19.8 dB,0.28 dB,33 dB,1.0*0.5*0.4 ,SMD ,Pb-free_Coupler_DCN Tx ,; ,[empty] ,836.5MHz ,25MHz ,SMD ,R/TP		
6	U102	PAM	SMPY0014001	35.5 dBm,56 %, A, dBc, dB,6x6x1.15 ,SMD ,Tri Band		
6	U103	COUPLER,RF DIRECTIONAL	SCDY0004301	20.5 dB,0.22 dB,34 dB,1.0*0.5*0.4 ,SMD ,Pb_free_KPCS+USPCS+WCDMA ,; ,[empty] ,1865MHz ,230MHz ,SMD ,R/TP		
6	U104	PAM	SMPY0018401	dBm, %, A, dBc, dB,3x5 ,SMD ,3G Dual PAM. B1+5 ,; , , , , , , , ,R/TP ,R/TP ,		
6	U200	IC	EUSY0344201	CSP ,543 PIN,R/TP ,HSUPA WVGA Baseband ,; ,IC,Digital Baseband Processor		
6	U300	IC	EUSY0380601	TFBGA ,137 ,ETC ,FULLY 1.8V 4G(LB/256Mx16) NAND+2G(DDR/16Mx4x32) SDRAM ,; ,IC,MCP		
6	U500	MODULE,ETC	SMZY0017901	ISDB-T Module, 26Pin, 6.3x7.7x1.15 ,; ,DMB		

Copyright © 2009 LG Electronics. Inc. All right reserved.
Only for training and service purposes

Level	Location No.	Description	Part Number	Spec	Color	Remark
6	U502	IC	EUSY0354001	PLP1010-4 ,4 PIN,R/TP ,1x1 LDO, 1.2V , 150mA ,; ,IC,LDO Voltage Regulator		
6	U504	IC	EUSY0359601	PLP1010-4 ,4 PIN,R/TP ,1.5V 150mA Ultra Low Q Current Single LDO ,; ,IC,LDO Voltage Regulator		
6	U603	IC	EUSY0329201	QFN ,28 PIN,R/TP ,Camera SerDes		
6	X100	VCTCXO	EXSK0007802	19.2 MHz,1.5 PPM,10 pF,SMD ,3.3*2.5*1.0 , ,; , ,2PPM ,2.8V , , , , ,SMD ,P/TP		
5	SPFY00	PCB,MAIN	SPFY0194601	FR-4 ,0.8 mm,LX-BUMP 10 ,MAIN- EXP ,; , , , , , , , , ,		

Copyright © 2009 LG Electronics. Inc. All right reserved.
Only for training and service purposes

LGE Internal Use Only

11.3 Accessory

Note: This Chapter is used for reference, Part order is ordered by SBOM standard on GCSC

Level	Location No.	Description	Part Number	Spec	Color	Remark
3	SBPL00	BATTERY PACK,LI-ION	SBPL0099601	3.7 V,900 mAh,1 CELL,PRISMATIC ,463450 NTT Docomo L06A ,; , , , ,PRISMATIC , , ,BLACK , ,		T', 84

Copyright © 2009 LG Electronics. Inc. All right reserved.
Only for training and service purposes